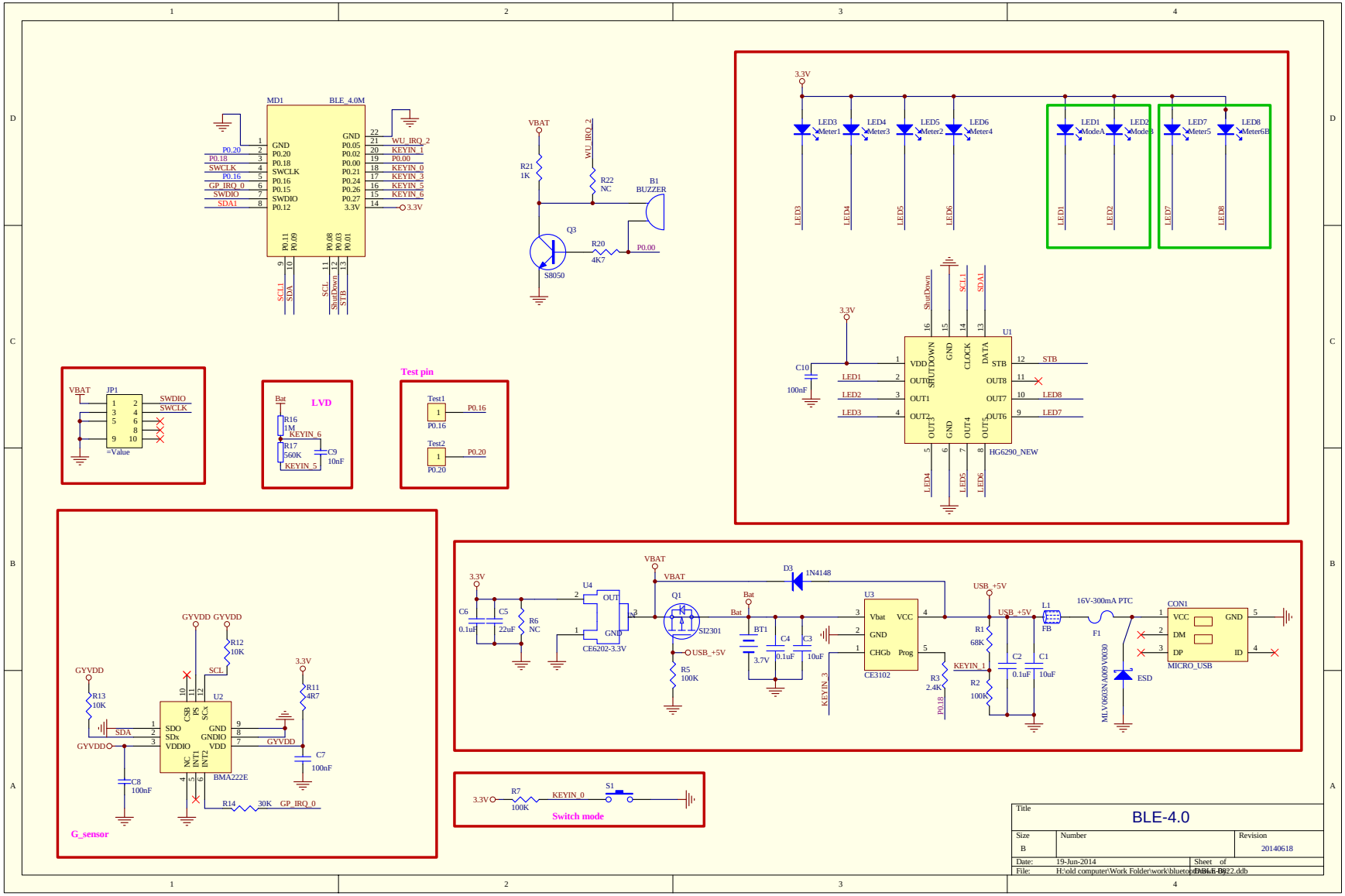
MD1
BLE_4.0M
GND
P0.20
P0.18
SWCLK
P0.16
P0.15
SWDIO
P0.12
P0.05
P0.02
P0.00
P0.21
P0.24
P0.26
P0.27
3.3V
P0.11
P0.09
P0.08
P0.03
P0.01
WU_IRQ_2
KEYIN_1
KEYIN_0
KEYIN_3
KEYIN_5
KEYIN_6
SCL1
SDA
SCL
ShutDown
STB
VBAT
R21
1K
R22
NC
B1
BUZZER
Q3
S8050
R20
4K7
P0.00
LED3
LED4
LED5
LED6
LED1
LED2
LED7
LED8
Meter1
Meter3
Meter2
Meter4
ModeA
Mode3
Meter5
Meter6B
U1
HG6290_NEW
VDD
OUT0
OUT1
OUT2
OUT3
OUT4
OUT5
OUT6
OUT7
OUT8
SHUTDOWN
CLOCK
DATA
STB
C10
100nF
JP1
SWDIO
SWCLK
=Value
Bat
LVD
R16
1M
R17
560K
C9
10nF
Test pin
Test1
Test2
P0.16
P0.20
GYVDD
R12
10K
R13
10K
R11
4R7
U2
SDO
SDx
VDDIO
CSB
PS
SCx
GND
GNDIO
VDD
NC
INT1
INT2
BMA222E
C7
100nF
C8
100nF
R14
30K
GP_IRQ_0
G_sensor
C6
0.1uF
C5
22uF
R6
NC
U4
CE6202-3.3V
OUT
GND
Q1
SI2301
D3
1N4148
R5
100K
BT1
3.7V
C4
0.1uF
C3
10uF
U3
CE3102
Vbat
VCC
GND
CHGb
Prog
USB_+5V
R1
68K
R2
100K
R3
2.4K
C2
0.1uF
C1
10uF
L1
FB
16V-300mA PTC
F1
MLV0603NA009V0030
ESD
CON1
MICRO_USB
DM
DP
ID
R7
100K
S1
Switch mode
Title
BLE-4.0
Size
B
Number
Revision
20140618
Date:
19-Jun-2014
Sheet of
File:
H:\old computer\Work Folder\work\bluetooth\BLE-B222.ddb

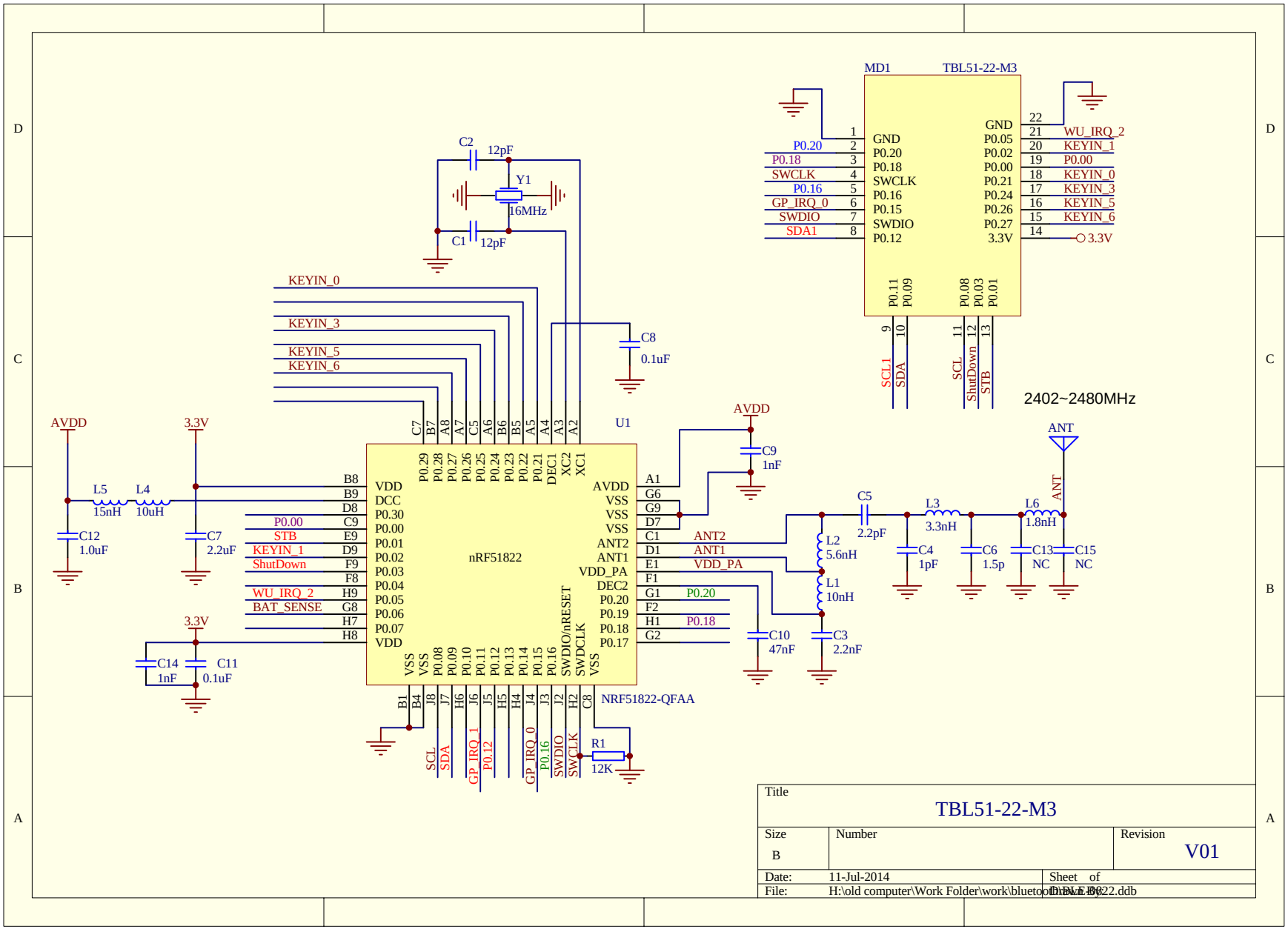

Title	TBL51-22-M3	
Size B	Number	Revision V01
Date: 11-Jul-2014	Sheet of	
File: H:\old computer\Work Folder\work\bluetooth\TBL51-22.ddb		