RADIO TEST REPORT
FCC ID: RS5-CROWNBT

Product:	Baby monitor
Trade Name:	N/A
Model No.:	Crown B
Serial Model:	Crown A
Report No.:	NTEK- 2016NT09128890F2
Issue Date:	09 Oct. 2016

Prepared for

MC DEVICES CO., LTD.
Suite 516 BLD 4 , NATIONAL SOFTWARE BASE, KEJIZHONG 2 RD, SHENZHEN HI-TECH PARK, SHENZHEN, CHINA

Prepared by

NTEK TESTING TECHNOLOGY CO., LTD.
1/F, Building E, Fenda Science Park, Sanwei Community,
Xixiang Street Bao'an District, Shenzhen, 518126 P.R. China
Tel.: +86-755-6115 6588
Fax.: +86-755-6115 6599
Website:http//www.ntek.org.cn

TABLE OF CONTENTS

1 TEST RESULT CERTIFICATION 3

2 SUMMARY OF TEST RESULTS 4

3 FACILITIES AND ACCREDITATIONS 5

3.1 FACILITIES 5
3.2 LABORATORY ACCREDITATIONS AND LISTINGS 5
3.3 MEASUREMENT UNCERTAINTY 5

4 GENERAL DESCRIPTION OF EUT 6

5 DESCRIPTION OF TEST MODES 8

6 SETUP OF EQUIPMENT UNDER TEST 10

6.1 BLOCK DIAGRAM CONFIGURATION OF TEST SYSTEM 10
6.2 SUPPORT EQUIPMENT 11
6.3 EQUIPMENTS LIST FOR ALL TEST ITEMS 12

7 TEST REQUIREMENTS 14

7.1 CONDUCTED EMISSIONS TEST 14
7.2 RADIATED SPURIOUS EMISSION 19
7.3 NUMBER OF HOPPING CHANNEL 28
7.4 HOPPING CHANNEL SEPARATION MEASUREMENT 30
7.5 AVERAGE TIME OF OCCUPANCY (DWELL TIME) 33
7.6 20DB BANDWIDTH TEST 36
7.7 PEAK OUTPUT POWER 39
7.8 CONDUCTED BAND EDGE MEASUREMENT 42
7.9 ANTENNA APPLICATION 44

1 TEST RESULT CERTIFICATION

Applicant's name.....:	MC DEVICES CO., LTD.
Address.....:	Suite 516 BLD 4 , NATIONAL SOFTWARE BASE, KEJIZHONG 2 RD, SHENZHEN HI-TECH PARK, SHENZHEN, CHINA
Manufacture's Name.....:	MC DEVICES CO., LTD.
Address.....:	Suite 516 BLD 4 , NATIONAL SOFTWARE BASE, KEJIZHONG 2 RD, SHENZHEN HI-TECH PARK, SHENZHEN, CHINA
Product description	
Product name.....:	Baby monitor
Model and/or type reference .....:	Crown B
Serial Model.....:	Crown A

Measurement Procedure Used:

APPLICABLE STANDARDS	
STANDARD/ TEST PROCEDURE	TEST RESULT
FCC 47 CFR Part 2, Subpart J:2016 FCC 47 CFR Part 15, Subpart C:2016 KDB 174176 D01 Line Conducted FAQ v01r01 ANSI C63.10-2013	Complied

This device described above has been tested by NTEK Testing Technology Co., Ltd., and the test results show that the equipment under test (EUT) is in compliance with the FCC requirements. And it is applicable only to the tested sample identified in the report.
This report shall not be reproduced except in full, without the written approval of NTEK Testing Technology Co., Ltd., this document may be altered or revised by NTEK Testing Technology Co., Ltd., personnel only, and shall be noted in the revision of the document.

The test results of this report relate only to the tested sample identified in this report.

Date of Test : 12 Sep. 2016 ~ 09 Oct. 2016

Testing Engineer : Lake. Xie
(Lake Xie)

Technical Manager : Jason chen
(Jason Chen)

Authorized Signatory : Sam. Chen
(Sam Chen)

2 SUMMARY OF TEST RESULTS

FCC Part15 (15.247), Subpart C			
Standard Section	**Test Item**	**Verdict**	**Remark**
15.207	Conducted Emission	PASS	
15.247(c)	Radiated Spurious Emission	PASS	
15.247(a)(1)	Hopping Channel Separation	PASS	
15.247(b)(1)	Peak Output Power	PASS	
15.247(a)(iii)	Number of Hopping Frequency	PASS	
15.247(a)(iii)	Dwell Time	PASS	
15.247(a)(1)	Bandwidth	PASS	
15.205	Band Edge Emission	PASS	
15.203	Antenna Requirement	PASS	

Remark:
1. “N/A” denotes test is not applicable in this Test Report.
2. All test items were verified and recorded according to the standards and without any deviation during the test.

3 FACILITIES AND ACCREDITATIONS

3.1 FACILITIES

All measurement facilities used to collect the measurement data are located at
1/F, Building E, Fenda Science Park, Sanwei Community, Xixiang Street, Bao'an District, Shenzhen P.R. China.
The sites are constructed in conformance with the requirements of ANSI C63.7, ANSI C63.10 and CISPR Publication 22.

3.2 LABORATORY ACCREDITATIONS AND LISTINGS

Site Description

EMC Lab.	:	Accredited by CNAS, 2014.09.04 The certificate is valid until 2017.09.03 The Laboratory has been assessed and proved to be in compliance with CNAS-CL01:2006 (identical to ISO/IEC 17025:2005) The Certificate Registration Number is L5516. Accredited by FCC, September 6, 2013 The Certificate Registration Number is 238937. Accredited by Industry Canada, August 29, 2012 The Certificate Registration Number is 9270A-1.
Name of Firm	:	NTEK Testing Technology Co., Ltd
Site Location	:	1/F, Building E, Fenda Science Park, Sanwei Community, Xixiang Street, Bao'an District, Shenzhen P.R. China.

3.3 MEASUREMENT UNCERTAINTY

The reported uncertainty of measurement y±U, where expended uncertainty U is based on a standard uncertainty multiplied by a coverage factor of k=2, providing a level of confidence of approximately 95 %.

No.	Item	Uncertainty
1	Conducted Emission Test	±1.38dB
2	RF power, conducted	±0.16dB
3	Spurious emissions, conducted	±0.21dB
4	All emissions, radiated(<1G)	±4.68dB
5	All emissions, radiated(>1G)	±4.89dB
6	Temperature	±0.5°C
7	Humidity	±2%

4 GENERAL DESCRIPTION OF EUT

Product Feature and Specification	
Equipment	Baby monitor
Trade Name	N/A
FCC ID	RS5-CROWNBT
Model No.	Crown B
Serial Model	Crown A
Model Difference	All the model are the same circuit and RF module, only for difference model name.
Operating Frequency	2405.377MHz~2477.569MHz
Modulation	FHSS
Number of Channels	36 Channels
Antenna Type	Internal Antenna
Antenna Gain	0 dBi
Power supply	☐DC supply: DC 1.2V*2AAA Battery
	☒Adapter supply: Input：AC 100-240V,50/60Hz 0.2A Output：DC 5V,1A
HW Version	N/A
SW Version	N/A

Note: Based on the application, features, or specification exhibited in User's Manual, the EUT is considered as an ITE Device. The USB port is only for charging. More details of EUT technical specification, please refer to the User's Manual.

Revision History

Report No.	Version	Description	Issued Date
NTEK-2016NT09128890F2	Rev.01	Initial issue of report	Oct 09, 2016

5 DESCRIPTION OF TEST MODES

To investigate the maximum EMI emission characteristics generates from EUT, the test system was pre-scanning tested base on the consideration of following EUT operation mode or test configuration mode which possible have effect on EMI emission level. Each of these EUT operation mode(s) or test configuration mode(s) mentioned above was evaluated respectively.
The Transmitter was operated in the normal operating mode. The TX frequency was fixed which was for the purpose of the measurements.

Test of channel included the lowest and middle and highest frequency to perform the test, then record on this report.

Those data rates (1Mbps for GFSK modulation; 2Mbps for π/4-DQPSK modulation; 3Mbps for 8DPSK modulation) were used for all test.
The EUT was pretested with 3 orientations placed on the table for the radiated emission measurement –X, Y, and Z-plane. The X-plane results were found as the worst case and were shown in this report.
Carrier Frequency and Channel list:

Channel List							
Channel	Frequency (MHz)	Channel	Frequency (MHz)	Channel	Frequency (MHz)	Channel	Frequency (MHz)
01	2405.377	10	2423.809	19	2442.753	28	2461.185
02	2407.425	11	2425.857	20	2444.801	29	2463.233
03	2409.473	12	2427.905	21	2446.849	30	2465.281
04	2411.521	13	2430.465	22	2448.897	31	2467.329
05	2413.569	14	2432.513	23	2450.945	32	2469.377
06	2415.617	15	2434.561	24	2452.993	33	2471.425
07	2417.665	16	2436.609	25	2455.041	34	473.473
08	2419.713	17	2438.657	26	2457.089	35	2475.521
09	2421.761	18	2440.705	27	2459.137	36	2477.569

Note: fc=2405.377MHz+k×1MHz k=0 to 36
The following summary table is showing all test modes to demonstrate in compliance with the standard.

For AC Conducted Emission	
Final Test Mode	Description
Mode 1	normal link mode

Note: AC power line Conducted Emission was tested under maximum output power.

For Radiated Test Cases	
Final Test Mode	Description
Mode 1	normal link mode
Mode 2	CH01(2405.377MHz)
Mode 3	CH18(2440.705MHz)
Mode 4	CH36(2477.569MHz)

Note: For radiated test cases, the worst mode data rate 1Mbps was reported only, because this data rate has the highest RF output power at preliminary tests, and no other significantly frequencies found in conducted spurious emission.

For Conducted Test Cases	
Final Test Mode	Description
Mode 2	CH01(2405.377MHz)
Mode 3	CH18(2440.705MHz)
Mode 4	CH36(2477.569MHz)
Mode 5	Hopping mode

Note: The engineering test program was provided and the EUT was programmed to be in continuously transmitting mode.

1. EUT built-in battery-powered, fully-charged battery use of the test battery

6 SETUP OF EQUIPMENT UNDER TEST

6.1 BLOCK DIAGRAM CONFIGURATION OF TEST SYSTEM

For AC Conducted Emission Mode

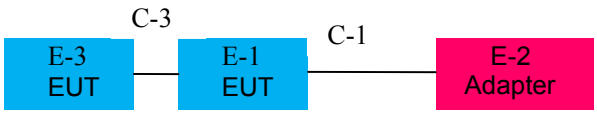

For Radiated Test Cases

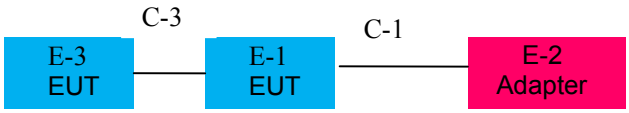

For Conducted Test Cases

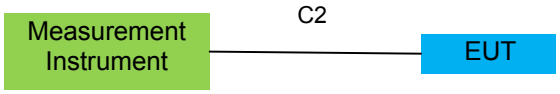

Note: The temporary antenna connector is soldered on the PCB board in order to perform conducted tests and this temporary antenna connector is listed in the equipment list.

Note: The EUT3 is Baby touch pad, if it touch can be send the touch signal to EUT1.

6.2 SUPPORT EQUIPMENT

The EUT has been tested as an independent unit together with other necessary accessories or support units. The following support units or accessories were used to form a representative test configuration during the tests.

Item	Equipment	Mfr/Brand	Model/Type No.	FCC ID	Note
E-1	Baby monitor	N/A	Crown B	RS5-CROWNBT	EUT
E-2	Adapter	N/A	N/A	N/A	Peripherals
E-3	Baby Pad	N/A	N/A	N/A	Peripherals

Item	Cable Type	Shielded Type	Ferrite Core	Length
C-1	DC Power Line	NO	NO	1.2m
C-2	RF Cable	NO	NO	0.5m
C-3	Signal Line	NO	NO	0.8m

Notes:

(1) The support equipment was authorized by Declaration of Confirmation.
(2) For detachable type I/O cable should be specified the length in cm in『Length』column.
(3) “YES” is means “shielded” “with core”; “NO” is means “unshielded” “without core”.

6.3 EQUIPMENTS LIST FOR ALL TEST ITEMS

Radiation Test equipment

Item	Kind of Equipment	Manufacturer	Type No.	Serial No.	Last calibration	Calibrated until	Calibration period
1	Spectrum Analyzer	Agilent	E4407B	MY45108040	2016.07.06	2017.07.05	1 year
2	Spectrum Analyzer	Agilent	N9020A	MY49100060	2015.11.19	2016.11.18	1 year
3	Test Receiver	R&S	ESPI	101318	2016.06.07	2017.06.06	1 year
4	Bilog Antenna	TESEQ	CBL6111D	31216	2016.07.06	2017.07.05	1 year
5	50Ω Coaxial Switch	Anritsu	MP59B	6200264416	2016.06.07	2017.06.06	1 year
7	Horn Antenna	EM	EM-AH-10180	2011071402	2016.07.06	2017.07.05	1 year
8	Horn Ant	Schwarzbeck	BBHA 9170	9170-181	2016.07.06	2017.07.05	1 year
9	Pre-Amplifier	EMC	EMC051835 SE	980246	2016.08.09	2017.08.09	1 year
10	Loop Antenna	ARA	PLA-1030/B	1029	2016.06.08	2017.06.07	1 year
11	Test Cable (9KHz-30MHz)	N/A	R-04	N/A	2016.06.06	2017.06.05	1 year
12	Test Cable (30MHz-1GHz)	N/A	R-01	N/A	2016.07.06	2017.07.05	1 year
13	Test Cable (1-18GHz)	N/A	R-02	N/A	2016.07.06	2017.07.05	1 year
14	High Test Cable(18G-40 GHz)	N/A	R-03	N/A	2016.06.06	2017.06.05	1 year
15	temporary antenna connector (Note)	NTS	R001	N/A	N/A	N/A	N/A

Note:

We will use the temporary antenna connector (soldered on the PCB board) When conducted test
And this temporary antenna connector is listed within the instrument list

Conduction Test equipment

Item	Kind of Equipment	Manufacturer	Type No.	Serial No.	Last calibration	Calibrated until	Calibration period
1	Test Receiver	R&S	ESCI	101160	2016.06.06	2017.06.05	1 year
2	LISN	R&S	ENV216	101313	2016.08.24	2017.08.23	1 year
3	LISN	EMCO	3816/2	00042990	2016.08.24	2017.08.23	1 year
4	50Ω Coaxial Switch	Anritsu	MP59B	6200264417	2016.06.07	2017.06.06	1 year
5	Passive Voltage Probe	R&S	ESH2-Z3	100196	2016.06.07	2017.06.06	1 year
6	Absorbing clamp	R&S	MOS-21	100423	2016.06.08	2017.06.07	1 year
7	Test Cable (9KHz-30MHz)	N/A	C01	N/A	2016.06.08	2017.06.07	1 year
8	Test Cable (9KHz-30MHz)	N/A	C02	N/A	2016.06.08	2017.06.07	1 year
9	Test Cable (9KHz-30MHz)	N/A	C03	N/A	2016.06.08	2017.06.07	1 year

Note: Each piece of equipment is scheduled for calibration once a year.

7 TEST REQUIREMENTS

7.1 CONDUCTED EMISSIONS TEST

7.1.1 Applicable Standard

According to FCC Part 15.207(a) and KDB 174176 D01 Line Conducted FAQ v01r01

7.1.2 Conformance Limit

Frequency(MHz)	Conducted Emission Limit	
	Quasi-peak	Average
0.15-0.5	66-56*	56-46*
0.5-5.0	56	46
5.0-30.0	60	50

Note: 1. *Decreases with the logarithm of the frequency
2. The lower limit shall apply at the transition frequencies
3. The limit decreases in line with the logarithm of the frequency in the range of 0.15 to 0.50MHz.

7.1.3 Test Configuration

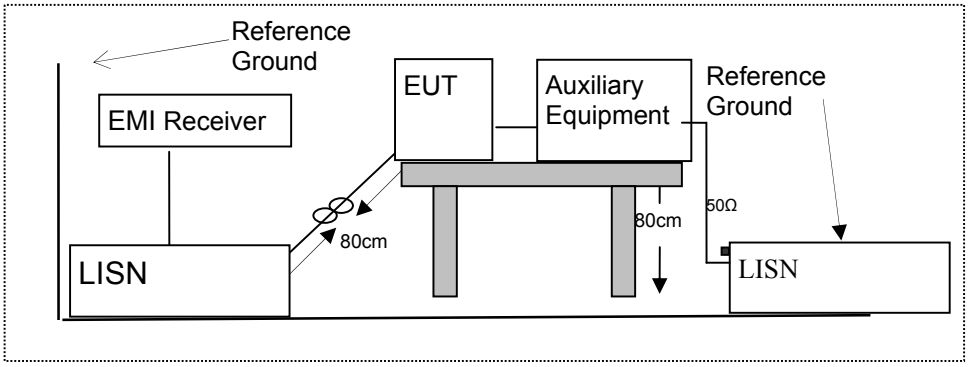

7.1.4 Test Procedure

According to the requirements in Section 13.1.4.1 of ANSI C63.10-2013 Conducted emissions the EUT measured in the frequency range between 0.15 MHz and 30 MHz using CISPR Quasi-Peak and average detector mode.

1. The EUT was placed 0.4 meter from the conducting wall of the shielding room.
2. The EUT was placed on a table which is 0.8m above ground plane.
3. Connect EUT to the power mains through a line impedance stabilization network (LISN). All other support equipments powered from additional LISN(s). The LISN provide 50 Ohm/ 50uH of coupling impedance for the measuring instrument.
4. Interconnecting cables that hang closer than 40 cm to the ground plane shall be folded back and forth in the center forming a bundle 30 to 40cm long.
5. I/O cables that are not connected to a peripheral shall be bundled in the center. The end of the cable may be terminated, if required, using the correct terminating impedance. The overall length shall not exceed 1 m.
6. LISN at least 80 cm from nearest part of EUT chassis.
7. The frequency range from 150KHz to 30MHz was searched.
8. Set the test-receiver system to Peak Detect Function and specified bandwidth(IF bandwidth=9KHz) with Maximum Hold Mode
9. For the actual test configuration, please refer to the related Item –EUT Test Photos.

7.1.5 Test Results

Pass

7.1.6 Test Results

EUT:	Baby monitor	Model Name :	Crown B
Temperature:	26 ℃	Relative Humidity:	54%
Pressure:	1010hPa	Phase :	L
Test Voltage :	DC 5.0V form Adapter AC 120V/60Hz	Test Mode:	Mode 1

Frequency (MHz)	Reading Level (dBμV)	Correct Factor (dB)	Measure-ment (dBμV)	Limits (dBμV)	Margin (dB)	Remark
0.1620	36.72	10.12	46.84	65.36	-18.52	QP
0.1620	16.45	10.12	26.57	55.36	-28.79	AVG
0.4099	34.71	10.03	44.74	57.65	-12.91	QP
0.4099	24.94	10.03	34.97	47.65	-12.68	AVG
0.7980	29.42	9.81	39.23	56.00	-16.77	QP
0.7980	18.45	9.81	28.26	46.00	-17.74	AVG
1.7179	38.82	9.79	48.61	56.00	-7.39	QP
1.7179	27.76	9.79	37.55	46.00	-8.45	AVG
2.7058	25.47	9.78	35.25	56.00	-20.75	QP
2.7058	12.20	9.78	21.98	46.00	-24.02	AVG
6.9099	30.55	9.85	40.40	60.00	-19.60	QP
6.9099	15.99	9.85	25.84	50.00	-24.16	AVG

Remark:

1. All readings are Quasi-Peak and Average values.
2. Factor = Insertion Loss + Cable Loss.

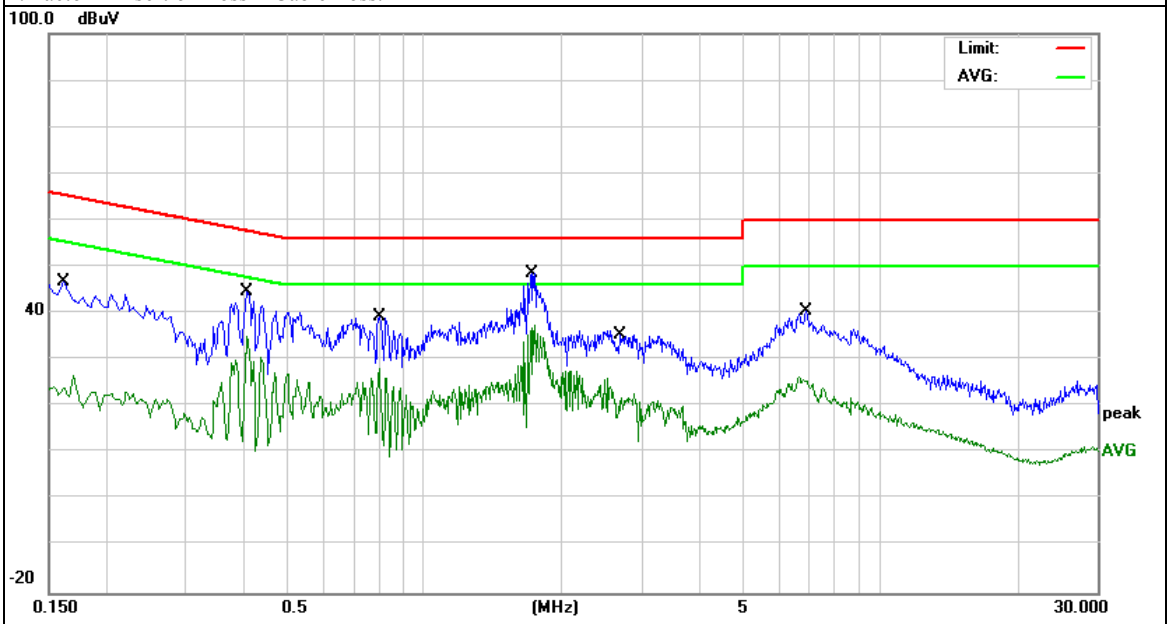

EUT:	Baby monitor	Model Name :	Crown B
Temperature:	26 ℃	Relative Humidity:	54%
Pressure:	1010hPa	Phase :	N
Test Voltage :	DC 5.0V form Adapter AC 120V/60Hz	Test Mode:	Mode 1

Frequency (MHz)	Reading Level (dBμV)	Correct Factor (dB)	Measure-ment (dBμV)	Limits (dBμV)	Margin (dB)	Remark
0.1980	32.97	10.02	42.99	63.69	-20.70	QP
0.1980	14.67	10.02	24.69	53.69	-29.00	AVG
0.4100	37.73	10.04	47.77	57.65	-9.88	QP
0.4100	31.75	10.04	41.79	47.65	-5.86	AVG
0.7060	29.91	9.82	39.73	56.00	-16.27	QP
0.7060	18.39	9.82	28.21	46.00	-17.79	AVG
0.8220	29.36	9.84	39.20	56.00	-16.80	QP
0.8220	23.04	9.84	32.88	46.00	-13.12	AVG
1.7260	33.14	9.81	42.95	56.00	-13.05	QP
1.7260	20.64	9.81	30.45	46.00	-15.55	AVG
7.0739	28.05	9.82	37.87	60.00	-22.13	QP
7.0739	16.92	9.82	26.74	50.00	-23.26	AVG

Remark:

1. All readings are Quasi-Peak and Average values.
2. Factor = Insertion Loss + Cable Loss.

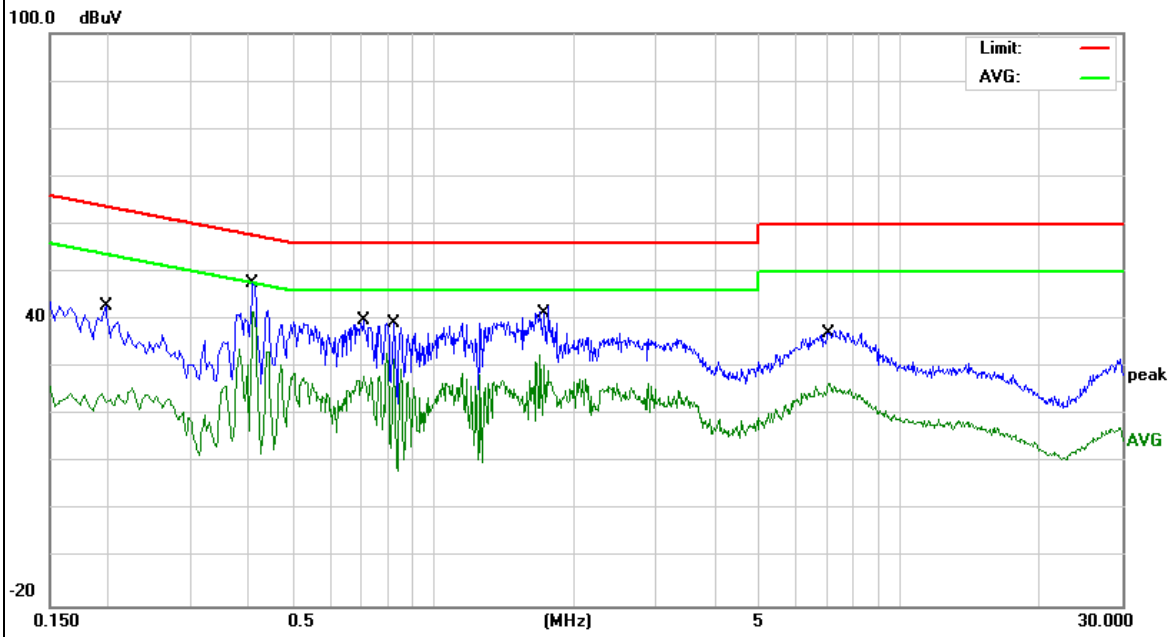

EUT:	Baby monitor	Model Name :	Crown B
Temperature:	26 ℃	Relative Humidity:	54%
Pressure:	1010hPa	Phase :	L
Test Voltage :	DC 5.0V form Adapter AC 240V/60Hz	Test Mode:	Mode 1

Frequency (MHz)	Reading Level (dBμV)	Correct Factor (dB)	Measure-ment (dBμV)	Limits (dBμV)	Margin (dB)	Remark
0.2058	33.99	10.13	44.12	63.37	-19.25	QP
0.2058	12.54	10.13	22.67	53.37	-30.70	AVG
0.4259	34.01	9.99	44.00	57.33	-13.33	QP
0.4259	18.88	9.99	28.87	47.33	-18.46	AVG
0.7980	29.42	9.81	39.23	56.00	-16.77	QP
0.7980	18.45	9.81	28.26	46.00	-17.74	AVG
1.6898	32.00	9.80	41.80	56.00	-14.20	QP
1.6898	20.47	9.80	30.27	46.00	-15.73	AVG
6.3059	28.22	9.85	38.07	60.00	-21.93	QP
6.3059	15.15	9.85	25.00	50.00	-25.00	AVG
7.1539	27.75	9.85	37.60	60.00	-22.40	QP
7.1539	16.00	9.85	25.85	50.00	-24.15	AVG

Remark:

1. All readings are Quasi-Peak and Average values.
2. Factor = Insertion Loss + Cable Loss.

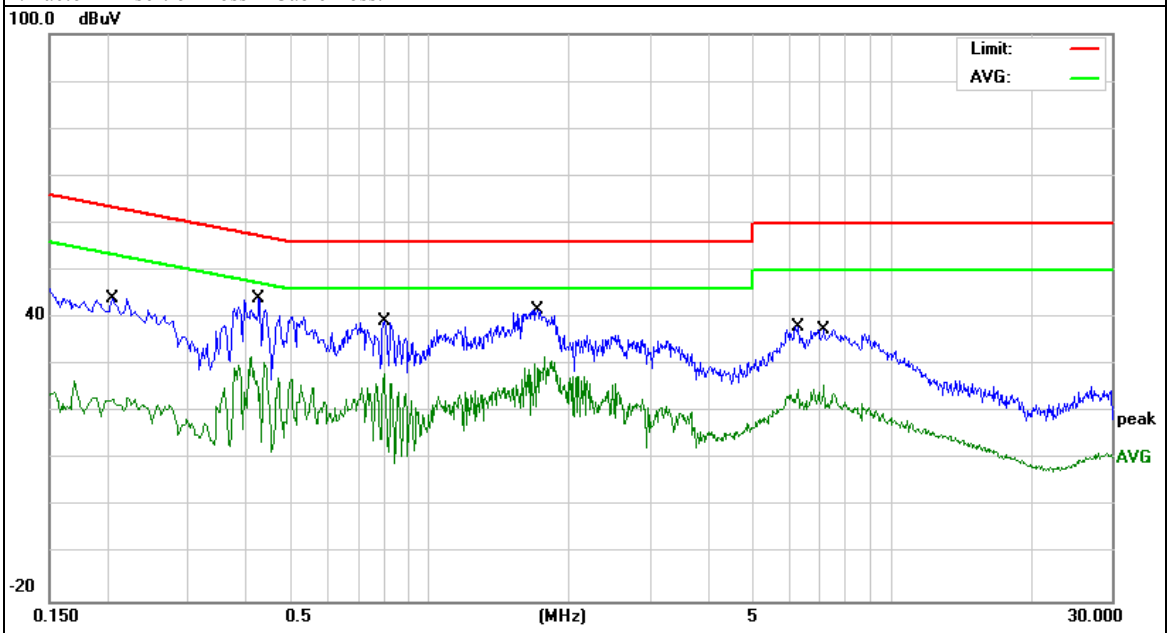

EUT:	Baby monitor	Model Name :	Crown B
Temperature:	26 ℃	Relative Humidity:	54%
Pressure:	1010hPa	Phase :	N
Test Voltage :	DC 5.0V form Adapter AC 240V/60Hz	Test Mode:	Mode 1

Frequency (MHz)	Reading Level (dBμV)	Correct Factor (dB)	Measure-ment (dBμV)	Limits (dBμV)	Margin (dB)	Remark
0.1980	32.97	10.02	42.99	63.69	-20.70	QP
0.1980	14.67	10.02	24.69	53.69	-29.00	AVG
0.4103	33.86	10.04	43.90	57.64	-13.74	QP
0.4103	26.61	10.04	36.65	47.64	-10.99	AVG
0.7059	29.91	9.82	39.73	56.00	-16.27	QP
0.7059	18.39	9.82	28.21	46.00	-17.79	AVG
1.4459	29.68	9.84	39.52	56.00	-16.48	QP
1.4459	16.29	9.84	26.13	46.00	-19.87	AVG
1.6619	31.45	9.82	41.27	56.00	-14.73	QP
1.6619	21.32	9.82	31.14	46.00	-14.86	AVG
7.0739	26.78	9.82	36.60	60.00	-23.40	QP
7.0739	15.92	9.82	25.74	50.00	-24.26	AVG

Remark:

1. All readings are Quasi-Peak and Average values.
2. Factor = Insertion Loss + Cable Loss.

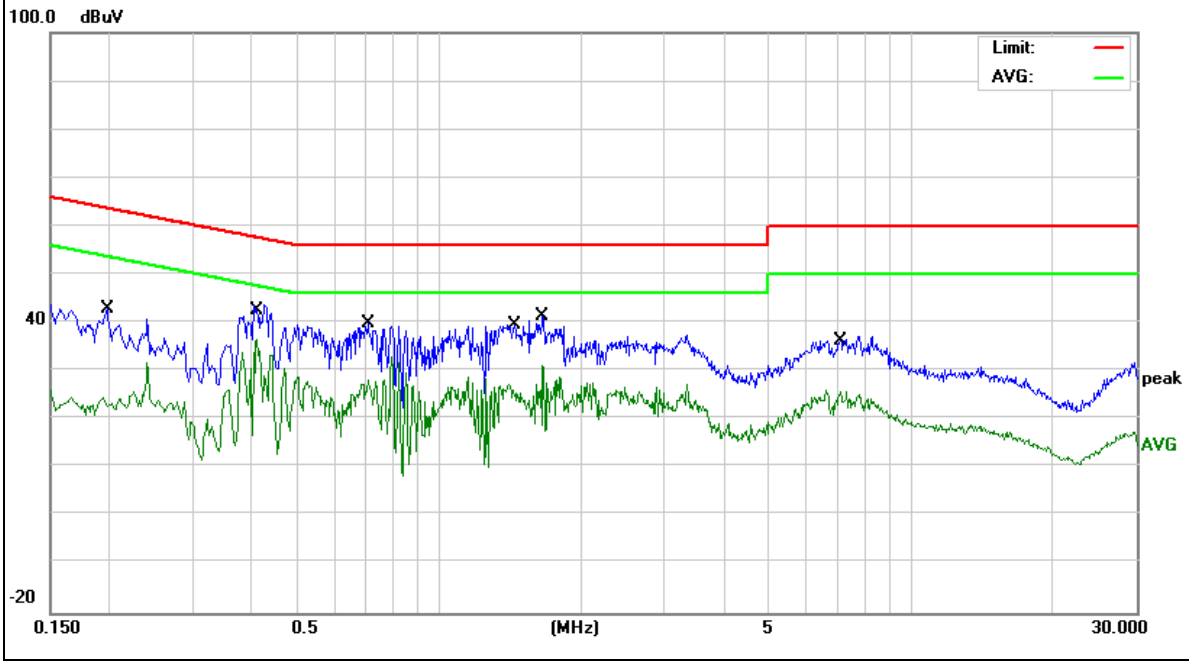

7.2 RADIATED SPURIOUS EMISSION

7.2.1 Applicable Standard

According to FCC Part 15.247(d) and 15.209 and ANSI C63.10-2013

7.2.2 Conformance Limit

According to FCC Part 15.247(d): radiated emissions which fall in the restricted bands, as defined in §15.205(a), must also comply with the radiated emission limits specified in §15.209(a) (see §15.205(c)).
According to FCC Part15.205, Restricted bands

MHz	MHz	MHz	GHz
0.090-0.110	16.42-16.423	399.9-410	4.5-5.15
10.495-0.505	16.69475-16.69525	608-614	5.35-5.46
2.1735-2.1905	16.80425-16.80475	960-1240	7.25-7.75
4.125-4.128	25.5-25.67	1300-1427	8.025-8.5
4.17725-4.17775	37.5-38.25	1435-1626.5	9.0-9.2
4.20725-4.20775	73-74.6	1645.5-1646.5	9.3-9.5
6.215-6.218	74.8-75.2	1660-1710	10.6-12.7
6.26775-6.26825	123-138	2200-2300	14.47-14.5
8.291-8.294	149.9-150.05	2310-2390	15.35-16.2
8.362-8.366	156.52475-156.52525	2483.5-2500	17.7-21.4
8.37625-8.38675	156.7-156.9	2690-2900	22.01-23.12
8.41425-8.41475	162.0125-167.17	3260-3267	23.6-24.0
12.29-12.293	167.72-173.2	3332-3339	31.2-31.8
12.51975-12.52025	240-285	3345.8-3358	36.43-36.5
12.57675-12.57725	322-335.4	3600-4400	(2)
13.36-13.41			

20dBc in any 100 kHz bandwidth outside the operating frequency band. In case the emission fall within the restricted band specified on 15.205(a), then the 15.209(a) limit in the table below has to be followed.

Restricted Frequency(MHz)	Field Strength (μV/m)	Field Strength (dBμV/m)	Measurement Distance
0.009~0.490	2400/F(KHz)	20 log (uV/m)	300
0.490~1.705	2400/F(KHz)	20 log (uV/m)	30
1.705~30.0	30	29.5	30
30-88	100	40	3
88-216	150	43.5	3
216-960	200	46	3
Above 960	500	54	3

Limits of Radiated Emission Measurement(Above 1000MHz)

Frequency(MHz)	Class B (dBuV/m) (at 3M)	
	PEAK	AVERAGE
Above 1000	74	54

Remark :1. Emission level in dBuV/m=20 log (uV/m)
2. Measurement was performed at an antenna to the closed point of EUT distance of meters.
3. Distance extrapolation factor =40log(Specific distance/ test distance)(dB);
Limit line=Specific limits(dBuV) + distance extrapolation factor.

7.2.3 Measuring Instruments

The Measuring equipment is listed in the section 6.3 of this test report.

7.2.4 Test Configuration

(a) For radiated emissions below 30MHz

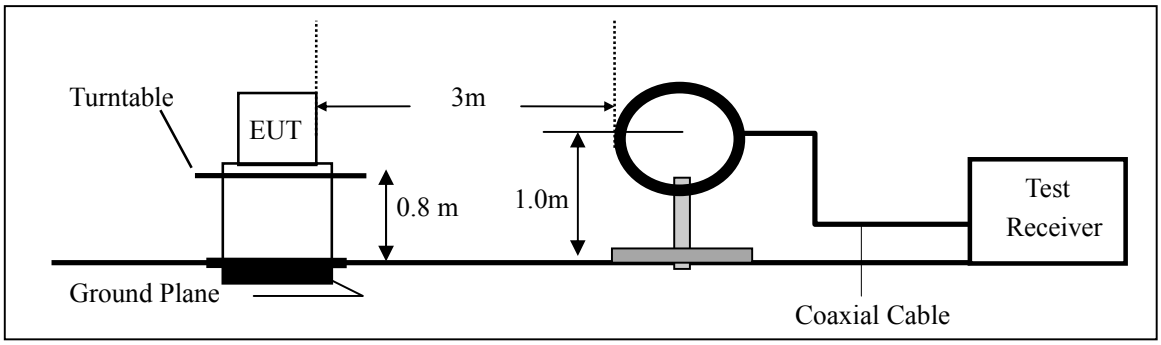

(b) For radiated emissions from 30MHz to 1000MHz

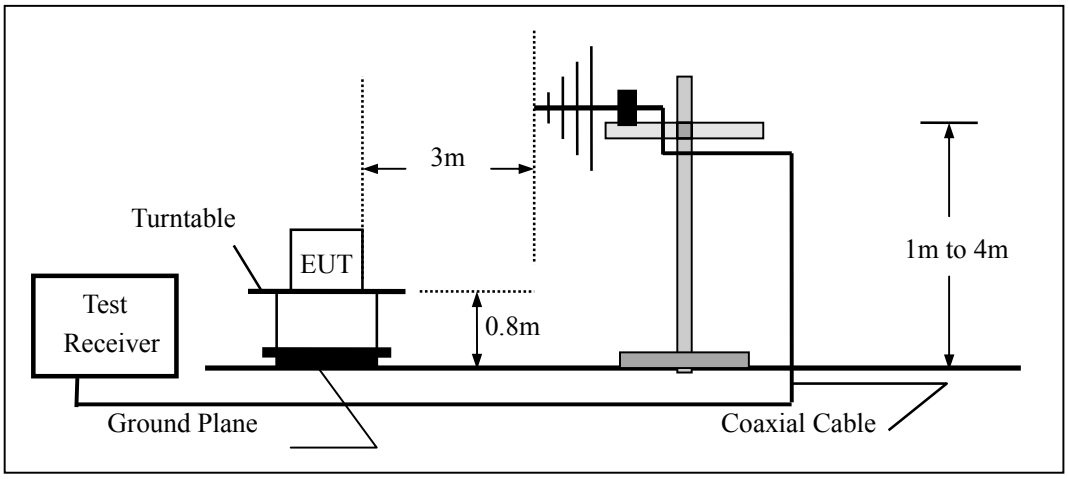

(c) For radiated emissions above 1000MHz

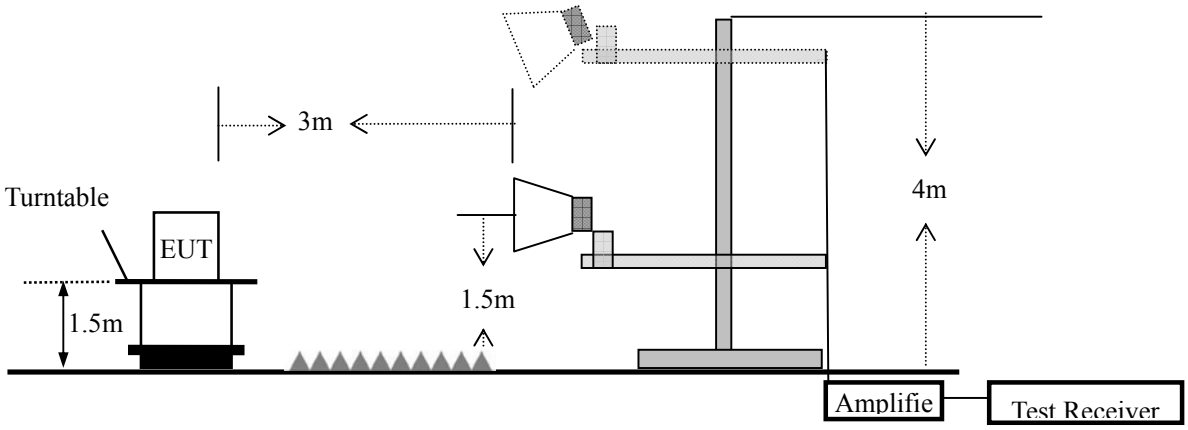

7.2.5 Test Procedure

The test site semi-anechoic chamber has met the requirement of NSA tolerance 4 dB according to the standards: ANSI C63.10-2013. The test distance is 3m.The setup is according to the requirements in Section 13.1.4.1 of ANSI C63.10-2013 and CAN/CSA-CEI/IEC CISPR 22.
This test is required for any spurious emission that falls in a Restricted Band, as defined in Section 15.205. It must be performed with the highest gain of each type of antenna proposed for use with the EUT.
Use the following spectrum analyzer settings:

Spectrum Parameter	Setting
Attenuation	Auto
Start Frequency	1000 MHz
Stop Frequency	10th carrier harmonic
RB / VB (emission in restricted band)	1 MHz / 1 MHz for Peak, 1 MHz / 10Hz for Average

Receiver Parameter	Setting
Attenuation	Auto
Start ~ Stop Frequency	9kHz~150kHz / RB 200Hz for QP
Start ~ Stop Frequency	150kHz~30MHz / RB 9kHz for QP
Start ~ Stop Frequency	30MHz~1000MHz / RB 120kHz for QP

a. The measuring distance of at 3 m shall be used for measurements at frequency up to 1GHz. For frequencies above 1GHz, any suitable measuring distance may be used.
b. The EUT was placed on the top of a rotating table 0.8 m for below 1GHz and 1.5m for above 1GHz the ground at a 3 meter. The table was rotated 360 degrees to determine the position of the highest radiation.
c. The height of the equipment or of the substitution antenna shall be 0.8 m for below 1GHz and 1.5m for above 1GHz; the height of the test antenna shall vary between 1 m to 4 m. Both horizontal and vertical polarizations of the antenna are set to make the measurement.
d. For the radiated emission test above 1GHz:
Place the measurement antenna away from each area of the EUT determined to be a source of emissions at the specified measurement distance, while keeping the measurement antenna aimed at the source of emissions at each frequency of significant emissions, with polarization oriented for maximum response. The measurement antenna may have to be higher or lower than the EUT, depending on the radiation pattern of the emission and staying aimed at the emission source for receiving the maximum signal. The final measurement antenna elevation shall be that which maximizes the emissions. The measurement antenna elevation for maximum emissions shall be restricted to a range of heights of from 1 m to 4 m above the ground or reference ground plane.
e. The initial step in collecting conducted emission data is a spectrum analyzer peak detector mode pre-scanning the measurement frequency range. Significant peaks are then marked and then Quasi Peak detector mode re-measured.
f. If the Peak Mode measured value compliance with and lower than Quasi Peak Mode Limit, the EUT shall be deemed to meet QP Limits and then no additional QP Mode measurement performed.
g. For the actual test configuration, please refer to the related Item –EUT Test Photos.

Note:

Both horizontal and vertical antenna polarities were tested
and performed pretest to three orthogonal axis. The worst case emissions were reported

During the radiated emission test, the Spectrum Analyzer was set with the following configurations:

Frequency Band (MHz)	Function	Resolution bandwidth	Video Bandwidth
30 to 1000	QP	120 kHz	300 kHz
Above 1000	Peak	1 MHz	1 MHz
	Average	1 MHz	10 Hz

Note: for the frequency ranges below 30 MHz, a narrower RBW is used for these ranges but the measured value should add a RBW correction factor (RBWCF) where RBWCF [dB] =10*lg(100 [kHz]/narrower RBW [kHz]). , the narrower RBW is 1 kHz and RBWCF is 20 dB for the frequency 9 kHz to 150 kHz, and the narrower RBW is 10 kHz and RBWCF is 10 dB for the frequency 150 kHz to 30 MHz.

7.2.6 Test Results

■ Spurious Emission below 30MHz (9KHz to 30MHz)

EUT:	Baby monitor	Model No.:	Crown B
Temperature:	20 ℃	Relative Humidity:	48%
Test Mode:	Mode2/Mode3/Mode4	Test By:	Lake Xie

Freq. (MHz)	Ant.Pol. H/V	Emission Level(dBuV/m)		Limit 3m(dBuV/m)		Over(dB)	
		PK	AV	PK	AV	PK	AV
--	--	--	--	--	--	--	--

Note: the amplitude of spurious emission that is attenuated by more than 20dB below the permissible limit has no need to be reported.
Distance extrapolation factor =20log(Specific distance/ test distance)(dB);
Limit line=Specific limits(dBuV) + distance extrapolation factor

■ Spurious Emission below 1GHz (30MHz to 1GHz)
All the modulation modes have been tested, and the worst result was report as below:

EUT:	Baby monitor	Model Name :	Crown B
Temperature:	20 ℃	Relative Humidity:	48%
Pressure:	1010hPa	Test Mode:	Mode 1
Test Voltage :	DC 5.0V form Adapter AC 240V/60Hz		

Polar (H/V)	Frequency (MHz)	Meter Reading (dBuV)	Factor (dB)	Emission Level (dBuV/m)	Limits (dBuV/m)	Margin (dB)	Remark
V	31.5093	7.48	19.70	27.18	40.00	-12.82	QP
V	41.8596	9.61	14.21	23.82	40.00	-16.18	QP
V	66.4989	12.37	7.61	19.98	40.00	-20.02	QP
V	96.4360	10.28	11.22	21.50	43.50	-22.00	QP
V	121.9753	12.43	11.67	24.10	43.50	-19.40	QP
V	248.5517	10.38	12.02	22.40	46.00	-23.60	QP

Remark:
Absolute Level= ReadingLevel+ Factor, Margin= Absolute Level - Limit

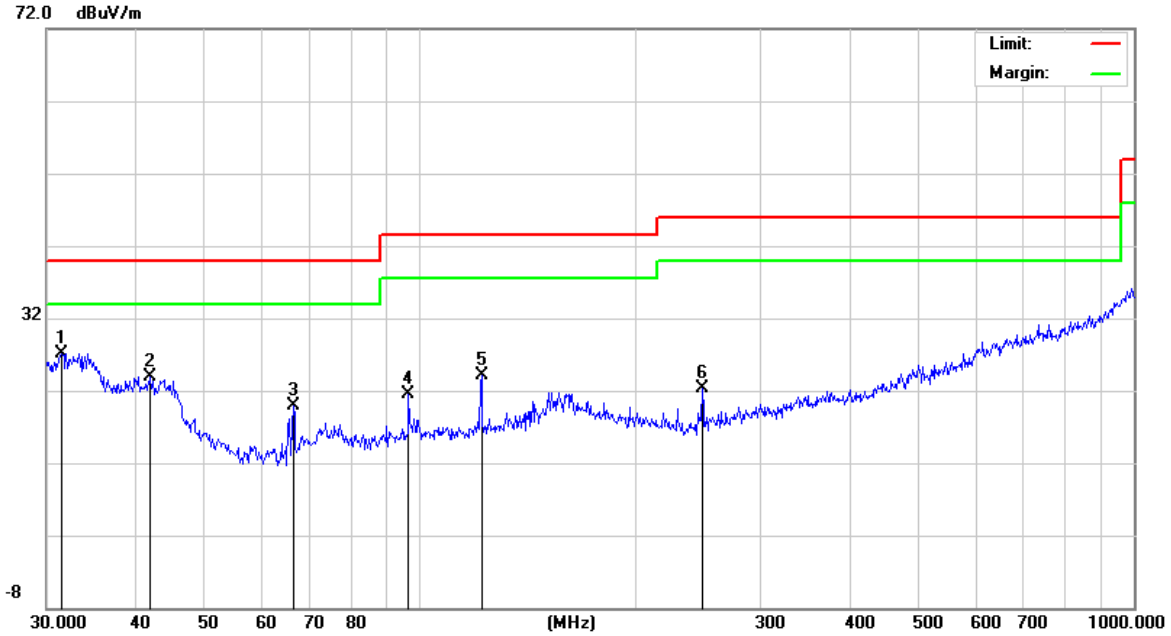

Polar (H/V)	Frequency (MHz)	Meter Reading (dBuV)	Factor (dB)	Emission Level (dBuV/m)	Limits (dBuV/m)	Margin (dB)	Remark
H	31.7313	6.91	19.62	26.53	40.00	-13.47	QP
H	52.7599	10.34	9.26	19.60	40.00	-20.40	QP
H	57.9992	10.65	6.95	17.60	40.00	-22.40	QP
H	153.2004	10.28	12.91	23.19	43.50	-20.31	QP
H	276.1235	10.50	13.00	23.50	46.00	-22.50	QP
H	731.9202	7.31	23.12	30.43	46.00	-15.57	QP

Remark:
Absolute Level= ReadingLevel+ Factor, Margin= Absolute Level - Limit

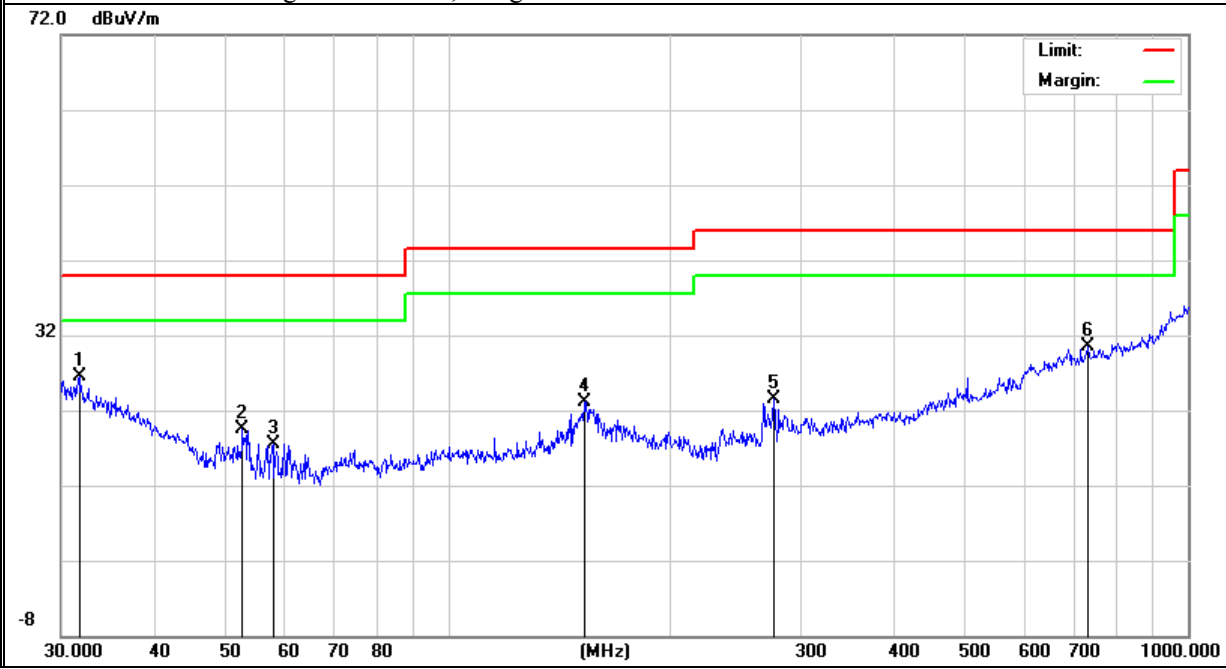

■ Spurious Emission Above 1GHz (1GHz to 25GHz)

EUT:	Baby monitor	Model No.:	Crown B
Temperature:	20 ℃	Relative Humidity:	48%
Test Mode:	Mode2/Mode3/Mode4	Test By:	Lake Xie

All the modulation modes have been tested, and the worst result was report as below:

Frequency (MHz)	Read Level (dBμV)	Cable loss (dB)	Antenna Factor dB/m	Preamp Factor (dB)	Emission Level (dBμV/m)	Limits (dBμV/m)	Margin (dB)	Remark	Comment
Low Channel (2405.377 MHz)(GFSK)--Above 1G									
4810.75	53.25	5.21	35.59	44.30	49.75	74.00	-24.25	Pk	Vertical
4810.75	43.39	5.21	35.59	44.30	39.89	54.00	-14.11	AV	Vertical
7216.13	53.45	6.48	36.27	44.60	51.60	74.00	-22.40	Pk	Vertical
7216.13	42.13	6.48	36.27	44.60	40.28	54.00	-13.72	AV	Vertical
4810.75	53.98	5.21	35.55	44.30	50.44	74.00	-23.56	Pk	Horizontal
4810.75	43.71	5.21	35.55	44.30	40.17	54.00	-13.83	AV	Horizontal
7216.13	51.76	6.48	36.27	44.52	49.99	74.00	-24.01	Pk	Horizontal
7216.13	40.74	6.48	36.27	44.52	38.97	54.00	-15.03	AV	Horizontal
Mid Channel (2440.705 MHz)(GFSK)--Above 1G									
4881.41	57.10	5.21	35.66	44.20	53.77	74.00	-20.23	Pk	Vertical
4881.41	43.82	5.21	35.66	44.20	40.49	54.00	-13.51	AV	Vertical
7322.12	54.95	7.10	36.50	44.43	54.12	74.00	-19.88	Pk	Vertical
7322.12	42.76	7.10	36.50	44.43	41.93	54.00	-12.07	AV	Vertical
4881.41	51.78	5.21	35.66	44.20	48.45	74.00	-25.55	Pk	Horizontal
4881.41	40.65	5.21	35.66	44.20	37.32	54.00	-16.68	AV	Horizontal
7322.12	52.75	7.10	36.50	44.43	51.92	74.00	-22.08	Pk	Horizontal
7322.12	41.32	7.10	36.50	44.43	40.49	54.00	-13.51	AV	Horizontal
High Channel (2477.569 MHz)(GFSK)-- Above 1G									
4955.14	53.01	5.21	35.52	44.21	49.53	74.00	-24.47	Pk	Vertical
4955.14	43.63	5.21	35.52	44.21	40.15	54.00	-13.85	AV	Vertical
7432.71	53.74	7.10	36.53	44.60	52.77	74.00	-21.23	Pk	Vertical
7432.71	43.17	7.10	36.53	44.60	42.20	54.00	-11.80	AV	Vertical
4955.14	50.23	5.21	35.52	44.21	46.75	74.00	-27.25	Pk	Horizontal
4955.14	40.15	5.21	35.52	44.21	36.67	54.00	-17.33	AV	Horizontal
7432.71	51.62	7.10	36.53	44.60	50.65	74.00	-23.35	Pk	Horizontal
7432.71	41.85	7.10	36.53	44.60	40.88	54.00	-13.1198	AV	Horizontal

Note: (1) All Readings are Peak Value (VBW=3MHz) and AV Value (VBW=10Hz).
(2) Emission Level= Antenna Factor + Cable Loss + Read Level - Preamp Factor
(3)All other emissions more than 20dB below the limit.

■ Spurious Emission in Band edge

EUT:	Baby monitor	Model No.:	Crown B
Temperature:	20 ℃	Relative Humidity:	48%
Test Mode:	Mode2/Mode3/Mode4	Test By:	Lake Xie

All the modulation modes have been tested, and the worst result was report as below:

Frequency	Meter Reading	Factor	Emission Level	Limits	Margin	Detector	Comment
(MHz)	(dBμV)	(dB)	(dBμV/m)	(dBμV/m)	(dB)	Type	
Non-hopping							
2390	50.34	-13.06	37.28	74.00	-36.72	peak	Vertical
2390	42.81	-13.06	29.75	54.00	-24.25	AV	Vertical
2390	53.11	-13.06	40.05	74.00	-33.95	peak	Horizontal
2390	43.00	-13.06	29.94	54.00	-24.06	AV	Horizontal
2483.5	53.40	-12.78	40.62	74.00	-33.38	peak	Vertical
2483.5	41.53	-12.78	28.75	54.00	-25.25	AV	Vertical
2483.5	51.21	-12.78	38.43	74.00	-35.57	peak	Horizontal
2483.5	42.16	-12.78	29.38	54.00	-24.62	AV	Horizontal
hopping							
2390	52.47	-13.06	39.41	74.00	-34.59	peak	Vertical
2390	41.26	-13.06	28.20	54.00	-25.80	AV	Vertical
2390	53.83	-13.06	40.77	74.00	-33.23	peak	Horizontal
2390	43.69	-13.06	30.63	54.00	-23.37	AV	Horizontal
2483.5	50.21	-12.78	37.43	74.00	-36.57	peak	Vertical
2483.5	43.33	-12.78	30.55	54.00	-23.45	AV	Vertical
2483.5	51.36	-12.78	38.58	74.00	-35.42	peak	Horizontal
2483.5	43.24	-12.78	30.46	54.00	-23.54	AV	Horizontal

Note: (1) All other emissions more than 20dB below the limit.

■ Spurious Emission in Restricted Band 3260MMHz-18000MHz

EUT:	Baby monitor	Model No.:	Crown B
Temperature:	20 ℃	Relative Humidity:	48%
Test Mode:	Mode2/Mode3/Mode4	Test By:	Lake Xie

All the modulation modes have been tested, and the worst result was report as below:

Frequency (MHz)	Meter Reading (dBμV)	Factor (dB)	Emission Level (dBμV/m)	Limits (dBμV/m)	Margin (dB)	Detector Type	Comment
Non-hopping							
3260	61.98	-13.06	48.92	74	-25.08	Pk	Vertical
3260	56.01	-13.06	42.95	54	-11.05	AV	Vertical
3260	64.03	-13.06	50.97	74	-23.03	Pk	Horizontal
3260	53.88	-13.06	40.82	54	-13.18	AV	Horizontal
3332	63.71	-12.78	50.93	74	-23.07	Pk	Vertical
3332	57.14	-12.78	44.36	54	-9.64	AV	Vertical
3332	64.60	-12.78	51.82	74	-22.18	Pk	Horizontal
3332	55.71	-12.78	42.93	54	-11.07	AV	Horizontal
17789	57.28	-12.24	45.04	74	-28.96	Pk	Vertical
17789	50.79	-12.24	38.55	54	-15.45	AV	Vertical
17957	57.83	-12.24	45.59	74	-28.41	Pk	Horizontal
17957	51.90	-12.24	39.66	54	-14.34	AV	Horizontal
hopping							
3260	60.01	-13.06	46.95	74	-27.05	Pk	Vertical
3260	54.83	-13.06	41.77	54	-12.23	AV	Vertical
3260	60.55	-13.06	47.49	74	-26.51	Pk	Horizontal
3260	54.39	-13.06	41.33	54	-12.67	AV	Horizontal
3332	61.35	-12.78	48.57	74	-25.43	Pk	Vertical
3332	53.87	-12.78	41.09	54	-12.91	AV	Vertical
3332	60.46	-12.78	47.68	74	-26.32	Pk	Horizontal
3332	56.04	-12.78	43.26	54	-10.74	AV	Horizontal
17781	59.02	-12.24	46.78	74	-27.22	Pk	Vertical
17781	53.56	-12.24	41.32	54	-12.68	AV	Vertical
17955	59.45	-12.24	47.21	74	-26.79	Pk	Horizontal
17955	53.01	-12.24	40.77	54	-13.23	AV	Horizontal

Note: (1) All other emissions more than 20dB below the limit.

7.3 NUMBER OF HOPPING CHANNEL

7.3.1 Applicable Standard

According to FCC Part 15.247(a)(1) (iii)and ANSI C63.10-2013

7.3.2 Conformance Limit

Frequency hopping systems in the 2400-2483.5MHz band shall use at least 15 channels.

7.3.3 Measuring Instruments

The Measuring equipment is listed in the section 6.3 of this test report.

7.3.4 Test Setup

Please refer to Section 6.1 of this test report.

7.3.5 Test Procedure

The testing follows ANSI C63.10-2013 clause 7.8.3
The RF output of EUT was connected to the spectrum analyzer by RF cable and attenuator.
The path loss was compensated to the results for each measurement.
Set to the maximum power setting and enable the EUT transmit continuously.
The EUT must have its hopping function enabled.
Use the following spectrum analyzer settings:
Span = the frequency band of operation
RBW ≥ 1% of the span
VBW ≥ RBW
Sweep = auto
Detector function = peak
Trace = max hold

7.3.6 Test Results

EUT:	Baby monitor	Model No.:	Crown B
Temperature:	20 ℃	Relative Humidity:	48%
Test Mode:	Mode 5	Test By:	Lake Xie

Number of Hopping (Channel)	Adaptive Frequency hopping (Channel)	limit	Verdict
36	20	⩾15	Pass

Number of Hopping Channel Plot

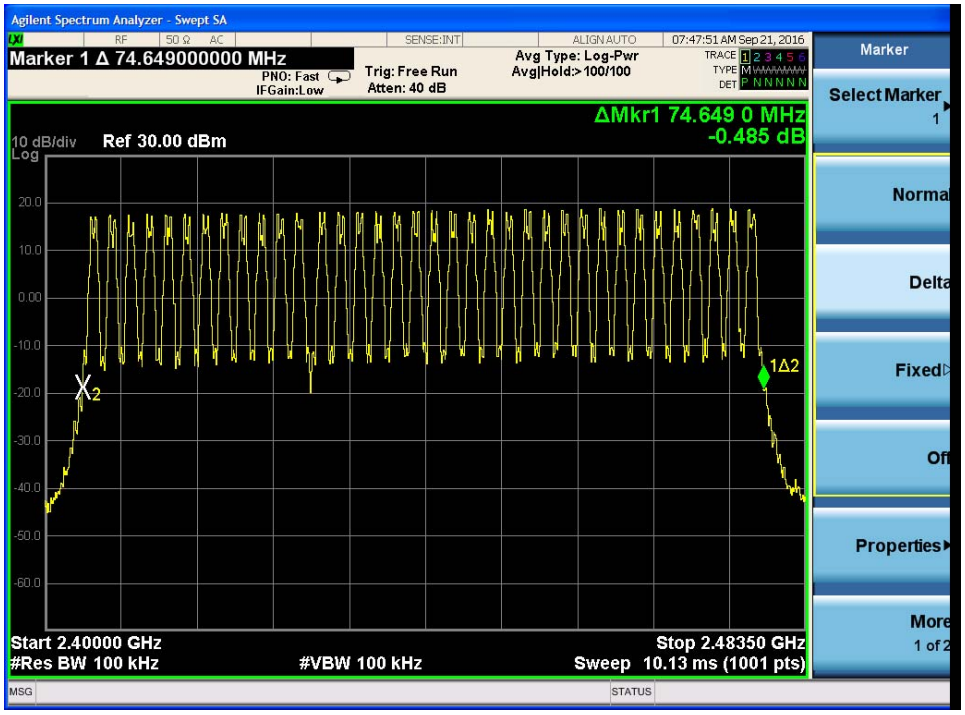

7.4 HOPPING CHANNEL SEPARATION MEASUREMENT

7.4.1 Applicable Standard

According to FCC Part 15.247(a)(1) and ANSI C63.10-2013

7.4.2 Conformance Limit

Frequency hopping systems operating in the 2400-2483.5MHz band shall have hopping channel carrier frequencies that are separated by 25kHz or two-thirds of the 20dB bandwidth of the hopping channel, whichever is greater.

7.4.3 Measuring Instruments

The Measuring equipment is listed in the section 6.3 of this test report.

7.4.4 Test Setup

Please refer to Section 6.1 of this test report.

7.4.5 Test Procedure

The testing follows ANSI C63.10-2013 clause 7.8.2
The RF output of EUT was connected to the spectrum analyzer by RF cable and attenuator.
The path loss was compensated to the results for each measurement.
Set to the maximum power setting and enable the EUT transmit continuously.
The EUT was operating in controlled its channel.
Use the following spectrum analyzer settings:
Span = Measurement Bandwidth or Channel Separation
RBW ≥ 30KHz
VBW ≥ 3*RBW
Sweep = auto
Detector function = peak
Trace = max hold

7.4.6 Test Results

EUT:	Baby monitor	Model No.:	Crown B
Temperature:	20 ℃	Relative Humidity:	48%
Test Mode:	Mode2/Mode3/Mode4	Test By:	Lake Xie

Modulation Mode	Channel Number	Channel Frequency (MHz)	Measurement Bandwidt (MHz)	Limit (kHz)		Verdict
GFSK	0	2405.377	2.05	>695.333	BW	PASS
	18	2440.705	2.05	>693.333	BW	PASS
	36	2477.569	2.045	>694	BW	PASS

Test Plot

Channel Separation plot on channel 01-02

Channel Separation plot on channel 17-18

Channel Separation plot on channel 35-36

7.5 AVERAGE TIME OF OCCUPANCY (DWELL TIME)

7.5.1 Applicable Standard

According to FCC Part 15.247(a)(1)(iii) and ANSI C63.10-2013

7.5.2 Conformance Limit

The average time of occupancy on any channel shall not be greater than 0.4s within a period of 0.4s multiplied by the number of hopping channels employed.

7.5.3 Measuring Instruments

The Measuring equipment is listed in the section 6.3 of this test report.

7.5.4 Test Setup

Please refer to Section 6.1 of this test report.

7.5.5 Test Procedure

The testing follows ANSI C63.10-2013 clause 7.8.4
The RF output of EUT was connected to the spectrum analyzer by RF cable and attenuator.
The path loss was compensated to the results for each measurement.
Set to the maximum power setting and enable the EUT transmit continuously.
The EUT must have its hopping function enabled.
Use the following spectrum analyzer settings:
Span = zero span, centered on a hopping channel
RBW ≥ 1MHz
VBW ≥ RBW
Sweep = as necessary to capture the entire dwell time per hopping channel
Detector function = peak
Trace = max hold
Measure the maximum time duration of one single pulse.
Set the EUT for DH5, DH3 and DH1 packet transmitting.
Measure the maximum time duration of one single pulse.

7.5.6 Test Results

EUT:	Baby monitor	Model No.:	Crown B
Temperature:	20 ℃	Relative Humidity:	48%
Test Mode:	Mode4	Test By:	Lake Xie

Modulation Mode	Channel Number	Packet type	Mode	Hops Over Occupanc (ms)	Pulse width (ms)	dwell time (ms)	Limit (ms)	Verdict
GFSK	36	DH5	Normal	106.67	1.25	133.338	<400	PASS
	36		AFH	53.33	1.25	66.663	<400	PASS

Note:
A Period Time = (channel number)*0.4
DH1 Time Slot: Reading * (1600/2)*31.6/(channel number)

For Example:

1. In normal mode, hopping rate is 1600 hops/s with 6 slots in 36 hopping channels. With channel hopping rate (1600 / 6 / 36) in Occupancy Time Limit (0.4 x 36) (s), Hops Over Occupancy Time comes to (1600 / 6 / 36) x (0.4 x 36) = 106.67 hops.

2. In AFH mode, hopping rate is 800 hops/s with 6 slots in 20 hopping channels. With channel hopping rate (800 / 6 / 20) in Occupancy Time Limit (0.4 x 20) (s), Hops Over Occupancy Time comes to (800 / 6 / 20) x (0.4 x 20) = 53.33 hops.

3. Dwell Time(s) = Hops Over Occupancy Time (hops) x Package Transfer Time

Test Plot

Package Transfer Time Plot CH36

7.6 20DB BANDWIDTH TEST

7.6.1 Applicable Standard

According to FCC Part 15.247(a)(1) and ANSI C63.10-2013

7.6.2 Conformance Limit

No limit requirement.

7.6.3 Measuring Instruments

The Measuring equipment is listed in the section 6.3 of this test report.

7.6.4 Test Setup

Please refer to Section 6.1 of this test report.

7.6.5 Test Procedure

The testing follows ANSI C63.10-2013 clause 6.9.2
The RF output of EUT was connected to the spectrum analyzer by RF cable and attenuator.
The path loss was compensated to the results for each measurement.
Set to the maximum power setting and enable the EUT transmit continuously.
The EUT was operating in controlled its channel.
Use the following spectrum analyzer settings:
Span = approximately 2 to 3 times the 20 dB bandwidth, centered on a hopping channel
RBW ≥ 1% of the 20 dB bandwidth
VBW ≥ RBW
Sweep = auto
Detector function = peak
Trace = max hold

7.6.6 Test Results

EUT:	Baby monitor	Model No.:	Crown B
Temperature:	20 ℃	Relative Humidity:	48%
Test Mode:	Mode2/Mode3/Mode4	Test By:	Lake Xie

Test Channel	Frequency (MHz)	Measurement Bandwidth (KHz)	Limit (kHz)	Verdict
1Mbps				
0	2405.377	1151	N/A	PASS
18	2440.705	1174	N/A	PASS
36	2477.569	1164	N/A	PASS

Note: N/A (Not Applicable)

Test Plot

20dB Bandwidth plot on channel 01

20dB Bandwidth plot on channel 18

20dB Bandwidth plot on channel 36

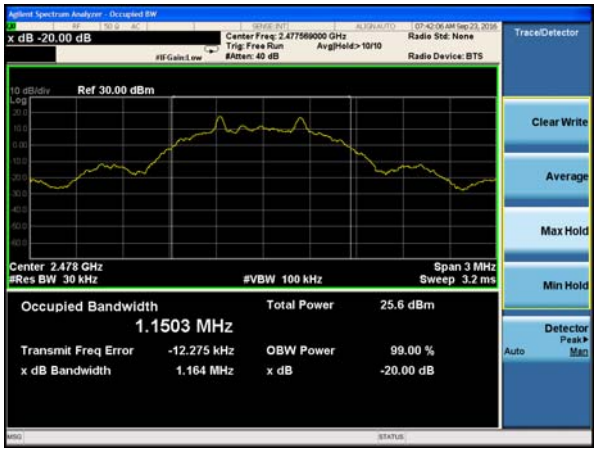

7.7 PEAK OUTPUT POWER

7.7.1 Applicable Standard

According to FCC Part 15.247(b)(1) and ANSI C63.10-2013

7.7.2 Conformance Limit

The maximum peak conducted output power of the intentional radiator shall not exceed the following: (1) For frequency hopping systems operating in the 2400-2483.5 MHz band employing at least 75 non-overlapping hopping channels, and all frequency hopping systems in the 5725-5850 MHz band: 1 watt. For all other frequency hopping systems in the 2400-2483.5 MHz band 0.125 watts.

7.7.3 Measuring Instruments

The Measuring equipment is listed in the section 6.3 of this test report.

7.7.4 Test Setup

Please refer to Section 6.1 of this test report.

7.7.5 Test Procedure

The testing follows ANSI C63.10-2013 clause 7.8.5.
The RF output of EUT was connected to the spectrum analyzer by RF cable and attenuator.
The path loss was compensated to the results for each measurement.
Set to the maximum power setting and enable the EUT transmit continuously.
The EUT was operating in controlled its channel.
Use the following spectrum analyzer settings:
Span = approximately 5 times the 20 dB bandwidth, centered on a hopping channel
RBW ≥ the 20 dB bandwidth of the emission being measured
VBW ≥ RBW
Sweep = auto
Detector function = peak
Trace = max hold

7.7.6 Test Results

EUT:	Baby monitor	Model No.:	Crown B
Temperature:	20 ℃	Relative Humidity:	48%
Test Mode:	Mode2/Mode3/Mode4	Test By:	Lake Xie

Test Channel	Frequency (MHz)	Power Setting	Peak Output Power (dBm)	LIMIT (dBm)	Verdict
1Mbps					
0	2405.377	Default	17.24	30	PASS
18	2440.705	Default	18.22	30	PASS
36	2477.569	Default	18.69	30	PASS

Test Plot

Peak output Power plot on channel 01

Peak output Power plot on channel 18

Peak output Power plot on channel 36

7.8 CONDUCTED BAND EDGE MEASUREMENT

7.8.1 Applicable Standard

According to FCC Part 15.247(d) and ANSI C63.10-2013

7.8.2 Conformance Limit

In any 100 kHz bandwidth outside the frequency band in which the spread spectrum or digitally modulated intentional radiator is operating, the radio frequency power that is produced by the intentional radiator shall be at least 20 dB below that in the 100 kHz bandwidth within the band that contains the highest level of the desired power, based on either an RF conducted or a radiated measurement, provided the transmitter demonstrates compliance with the peak conducted power limits. If the transmitter complies with the conducted power limits based on the use of RMS averaging over a time interval, as permitted under paragraph (b)(3) of this section, the attenuation required under this paragraph shall be 30 dB instead of 20 dB. Attenuation below the general limits specified in §15.209(a) is not required. In addition, radiated emissions which fall in the restricted bands, as defined in §15.205(a), must also comply with the radiated emission limits specified in §15.209(a) (see §15.205(c)).

7.8.3 Measuring Instruments

The Measuring equipment is listed in the section 6.3 of this test report.

7.8.4 Test Setup

Please refer to Section 6.1 of this test report.

7.8.5 Test Procedure

The testing follows ANSI C63.10-2013 clause 7.8.6.
The RF output of EUT was connected to the spectrum analyzer by RF cable and attenuator.
The path loss was compensated to the results for each measurement.
Set to the maximum power setting and enable the EUT transmit continuously.
The EUT must have its hopping function enabled.
Use the following spectrum analyzer settings:
Span = approximately 5 times the 20 dB bandwidth, centered on a hopping channel
RBW = 100KHz
VBW = 100KHz
Band edge emissions must be at least 20 dB down from the highest emission level within the authorized band as measured with a 100kHz RBW. The attenuation shall be 30 dB instead of 20 dB when RMS conducted output power procedure is used.
Measure the highest amplitude appearing on spectral display and set it as a reference level. Plot the graph with marking the highest point and edge frequency.
Repeat above procedures until all measured frequencies were complete.

7.8.6 Test Results

EUT:	Baby monitor	Model No.:	Crown B
Temperature:	20 ℃	Relative Humidity:	48%
Test Mode:	Mode2 /Mode4	Test By:	Lake Xie

Note: Hopping enabled and disabled have evaluated,and the wortest data was reported

Test Plot

GFSK mode: Band Edge-Low Channel

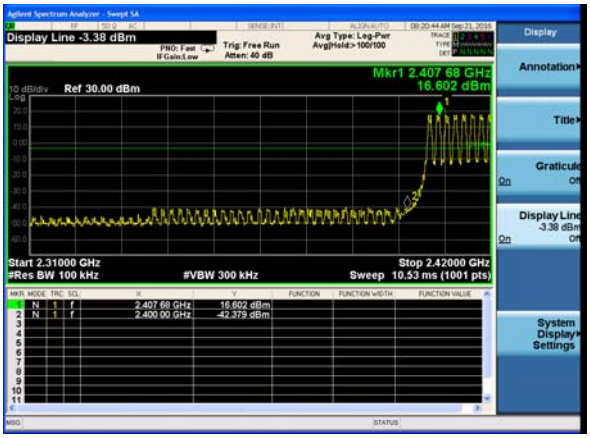

GFSK mode: Band Edge-High Channel

GFSK mode: Band Edge-Low Channel (Hopping Mode)

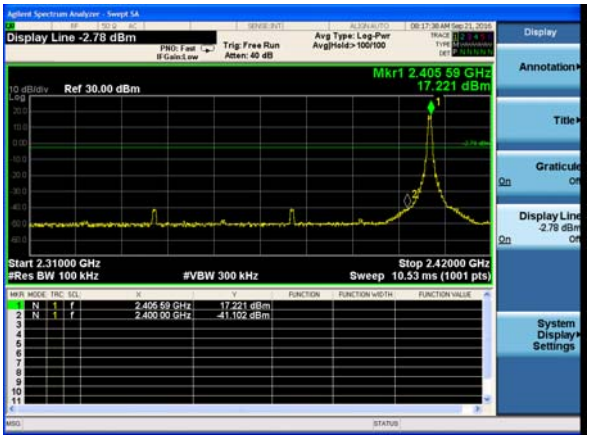

GFSK mode: Band Edge-High Channel (Hopping Mode)

7.9 ANTENNA APPLICATION

7.9.1 Antenna Requirement

15.203 requirement: For intentional device, according to 15.203: an intentional radiator shall be designed to ensure that no antenna other than that furnished by the responsible partyshall be used with the device.

7.9.2 Result

The EUT antenna is permanent attached antenna. It comply with the standard requirement.

END OF REPORT