TEST REPORT

Product Name : Baby monitor
Model Number : GRCOM-103t, CROWN
FCC ID : RS5-GRCOM-103T-B

Prepared for : MC DEVICES CO., LTD.
Address : The 23rd floor, Overseas Chinese mansion phase II ,Keyuan south road, Nanshan district, Shenzhen, China

Prepared by : EMTEK (SHENZHEN) CO., LTD.
Address : Building 69, Majialong Industry Zone, Nanshan District, Shenzhen, Guangdong, China

Tel: (0755) 26954280
Fax: (0755) 26954282

Report Number : ES201028033W
Date(s) of Tests : October 27, 2020 to November 30, 2020
Date of issue : November 30, 2020

Table of Contents

TEST REPORT **1**

1 TEST RESULT CERTIFICATION **3**

2 EUT TECHNICAL DESCRIPTION **4**

3 SUMMARY OF TEST RESULT **5**

4 TEST METHODOLOGY **6**

4.1 GENERAL DESCRIPTION OF APPLIED STANDARDS 6
4.2 MEASUREMENT EQUIPMENT USED 6
4.3 DESCRIPTION OF TEST MODES 8

5 FACILITIES AND ACCREDITATIONS **9**

5.1 FACILITIES 9
5.2 LABORATORY ACCREDITATIONS AND LISTINGS 9

6 TEST SYSTEM UNCERTAINTY **10**

7 SETUP OF EQUIPMENT UNDER TEST **11**

7.1 RADIO FREQUENCY TEST SETUP 1 11
7.2 RADIO FREQUENCY TEST SETUP 2 11
7.3 CONDUCTED EMISSION TEST SETUP 13
7.4 SUPPORT EQUIPMENT 13

8 TEST REQUIREMENTS **14**

8.1 BANDWIDTH TEST 14
8.2 RADIATED SPURIOUS EMISSION 17
8.3 CONDUCTED EMISSIONS TEST 27
8.4 ANTENNA APPLICATION 30

9 PHOTOS OF EUT **32**

1 TEST RESULT CERTIFICATION

Applicant : MC DEVICES CO., LTD.

Manufacturer : MC DEVICES CO., LTD.

Factory : Dongguan Caicheng Electronic Technology co.,Ltd.

EUT : Baby monitor

Model Name : GRCOM-103t, CROWN

Trademark : GRACO

Measurement Procedure Used:

APPLICABLE STANDARDS	
STANDARD	**TEST RESULT**
FCC 47 CFR Part 2, Subpart J FCC 47 CFR Part 15, Subpart C	**PASS**

The above equipment was tested by EMTEK(SHENZHEN) CO., LTD. The test data, data evaluation, test procedures,and equipment configurations shown in this report were made in accordance with the procedures given in ANSI C63.10 (2013) and the energy emitted by the sample EUT tested as described in this report is in compliance with the requirements of FCC Rules Part 2 and Part 15.249
The test results of this report relate only to the tested sample identified in this report

Date of Test : October 27, 2020 to November 30, 2020

Prepared by : Kaimin Guo /Editor

Reviewer : Jessie Hu /Supervisor

Approved & Authorized Signer : Lisa Wang /Manager

2 EUT TECHNICAL DESCRIPTION

Product:	Baby monitor
Model Number:	GRCOM-103t, CROWN (note: The models are the same except color of appearance and model number, here we prepare GRCOM-103t for the all test)
Adapter:	Model: HJ-0500600E1-US Input: AC 100-240V 50/60Hz 0.2A Output: DC 5V, 600mA
Power Supply:	AC120/60Hz
Modulation:	GFSK
Frequency Range:	2405.377-2477.569MHz
Number of Channels:	36 Channel
Max Transmit Power:	84.72 dBuV/m
Antenna Gain:	0 dBi
Antenna:	Internal Antenna

Note: for more details, please refer to the User's manual of the EUT.

3 SUMMARY OF TEST RESULT

FCC Part Clause	Test Parameter	Verdict	Remark
15.207	Conducted Emission	PASS	
15.209	Radiated Emission	PASS	
15.249	Radiated Spurious Emission	PASS	
15.249	Band edge test	PASS	
15.249	20dB Bandwidth	PASS	
15.203	Antenna Requirement	PASS	
NOTE1: N/A (Not Applicable) NOTE2: The report use radiated measurements in the restricted frequency bands. In addition, the radiated test is also performed to ensure the emissions emanating from the device cabinet also comply with the applicable limits.			

RELATED SUBMITTAL(S) / GRANT(S):

This submittal(s) (test report) is intended for FCC ID: RS5-GRCOM-103T-B filing to comply with Section 15.249 of the FCC Part 15, Subpart C Rules.

4 TEST METHODOLOGY

4.1 GENERAL DESCRIPTION OF APPLIED STANDARDS

According to its specifications, the EUT must comply with the requirements of the following standards:
FCC 47 CFR Part 2, Subpart J
FCC 47 CFR Part 15, Subpart C

4.2 MEASUREMENT EQUIPMENT USED

4.2.1 Conducted Emission Test Equipment

EQUIPMENT TYPE	MFR	MODEL NUMBER	SERIAL NUMBER	LASTCAL.	DUE CAL.
Test Receiver	Rohde & Schwarz	ESCI	26115-010-0027	05/22/2020	05/21/2021
L.I.S.N.	Rohde & Schwarz	ENV216	101161	05/22/2020	05/21/2021
50ΩCoaxial Switch	Anritsu	MP59B	6100175589	05/22/2020	05/21/2021
Voltage Probe	Rohde & Schwarz	ESH2-Z3	100122	05/22/2020	05/21/2021
Pulse Limiter	Rohde & Schwarz	ESH3-Z2	100006	05/22/2020	05/21/2021
I.S.N	Teseq GmbH	ISN T800	30327	05/22/2020	05/21/2021

4.2.2 Radiated Emission Test Equipment

EQUIPMENT TYPE	MFR	MODEL NUMBER	SERIAL NUMBER	LAST CAL.	DUE CAL.
EMI Test Receiver	Rohde & Schwarz	ESU	1302.6005.26	05/22/2020	05/21/2021
Pre-Amplifier	HP	8447F	2944A07999	05/22/2020	05/21/2021
Bilog Antenna	Schwarzbeck	VULB9163	142	05/22/2020	05/21/2021
Loop Antenna	ARA	PLA-1030/B	1029	05/22/2020	05/21/2021
Horn Antenna	Schwarzbeck	BBHA 9170	BBHA9170399	05/22/2020	05/21/2021
Horn Antenna	Schwarzbeck	BBHA 9120	D143	05/22/2020	05/21/2021
Cable	Schwarzbeck	AK9513	ACRX1	05/22/2020	05/21/2021
Cable	Rosenberger	N/A	FP2RX2	05/22/2020	05/21/2021
Cable	Schwarzbeck	AK9513	CRPX1	05/22/2020	05/21/2021
Cable	Schwarzbeck	AK9513	CRRX2	05/22/2020	05/21/2021

4.2.3 Radio Frequency Test Equipment

EQUIPMENT TYPE	MFR	MODEL NUMBER	SERIAL NUMBER	LASTCAL.	DUE CAL.
Spectrum Analyzer	Agilent	E4407B	88156318	05/22/2020	05/21/2021
EMI Test Receiver	Rohde & Schwarz	ESCI	101045	05/22/2020	05/21/2021
Signal Analyzer	Agilent	N9010A	My53470879	05/22/2020	05/21/2021
Power meter	Anritsu	ML2495A	0824006	05/22/2020	05/21/2021
Power sensor	Anritsu	MA2411B	0738172	05/22/2020	05/21/2021

Remark: Each piece of equipment is scheduled for calibration once a year.

4.3 DESCRIPTION OF TEST MODES

The EUT has been tested under its typical operating condition.
The EUT configuration for testing is installed on RF field strength measurement to meet the Commissions requirement and operating in a manner which intends to maximize its emission characteristics in a continuous normal application.
The Transmitter was operated in the normal operating mode. The TX frequency was fixed which was for the purpose of the measurements.

Test of channel included the lowest and middle and highest frequency to perform the test, then record on this report.

The EUT has been tested under its typical operating condition so those modulation and channel were used for all test.

Pre-defined engineering program for regulatory testing used to control the EUT for staying in continuous transmitting and receiving mode is programmed.

Frequency and Channel list:

Channel	Frequency (MHz)	Channel	Frequency (MHz)	Channel	Frequency (MHz)
1	2405.377	13	2430.465	25	2455.041
2	2407.425	14	2432.513	26	2457.089
3	2409.473	15	2434.561	27	2459.137
4	2411.521	16	2436.609	28	2461.185
5	2413.569	17	2438.657	29	2463.233
6	2415.617	18	2440.705	30	2465.281
7	2417.665	19	2442.753	31	2467.329
8	2419.713	20	2444.801	32	2469.377
9	2421.761	21	2446.849	33	2471.425
10	2423.809	22	2448.897	34	2473.473
11	2425.857	23	2450.945	35	2475.521
12	2427.905	24	2452.993	36	2477.569

Test Frequency and Channel list:

Lowest Frequency		Middle Frequency		Highest Frequency	
Channel	Frequency (MHz)	Channel	Frequency (MHz)	Channel	Frequency (MHz)
1	2405.377	18	2440.705	36	2477.569

5 FACILITIES AND ACCREDITATIONS

5.1 FACILITIES

All measurement facilities used to collect the measurement data are located at

Building 69, Majialong Industry Zone District, Nanshan District, Shenzhen, China
The sites are constructed in conformance with the requirements of ANSI C63.7, ANSI C63.10 and CISPR Publication 22.

5.2 LABORATORY ACCREDITATIONS AND LISTINGS

Site Description

EMC Lab.	:	Accredited by CNAS, 2018.11.30 The certificate is valid until 2022.10.28 The Laboratory has been assessed and proved to be in compliance with CNAS-CL01:2006 (identical to ISO/IEC 17025:2017) The Certificate Registration Number is L2291. Accredited by FCC Designation Number: CN1204 Test Firm Registration Number: 882943 Accredited by A2LA, August 08, 2018 The Certificate Number is 4321.01. Accredited by Industry Canada, November 09, 2018 The Conformity Assessment Body Identifier is CN0008
Name of Firm	:	EMTEK (SHENZHEN) CO., LTD.
Site Location	:	Building 69, Majialong Industry Zone, Nanshan District, Shenzhen, Guangdong, China

6 TEST SYSTEM UNCERTAINTY

The following measurement uncertainty levels have been estimated for tests performed on the apparatus:

Parameter	Uncertainty
Radio Frequency	±1x10^-5
Maximum Peak Output Power Test	±1.0dB
Conducted Emissions Test	±2.0dB
Radiated Emission Test	±2.0dB
Occupied Bandwidth Test	±1.0dB
Band Edge Test	±3dB
All emission, radiated	±3dB
Antenna Port Emission	±3dB
Temperature	±0.5℃
Humidity	±3%

Measurement Uncertainty for a level of Confidence of 95%

7 SETUP OF EQUIPMENT UNDER TEST

7.1 RADIO FREQUENCY TEST SETUP 1

The EUT wireless component's antenna ports(s) of the EUT are connected to the measurement instrument per an appropriate attenuator. The EUT is controlled by PC/software to emit the specified signals for the purpose of measurements.

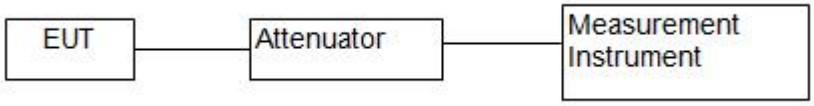

7.2 RADIO FREQUENCY TEST SETUP 2

The test site semi-anechoic chamber has met the requirement of NSA tolerance 4 dB according to the standards: ANSI C63.10. The test distance is 3m.The setup is according to the requirements in Section 13.1.4.1 of ANSI C63.10-2013 and CAN/CSA-CEI/IEC CISPR 22.

Below 30MHz：

The EUT is placed on a turntable 0.8 meters above the ground in the chamber, 3 meter away from the antenna (loop antenna). The Antenna should be positioned with its plane vertical at the specified distance from the EUT and rotated about its vertical axis for maximum response at each azimuth about the EUT. The center of the loop shall be 1 m above the ground. For certain applications, the loop antenna plane may also need to be positioned horizontally at the specified distance from the EUT.

30MHz-1GHz：

The EUT is placed on a turntable 0.8 meters above the ground in the chamber, 3 meter away from the antenna. The maximal emission value is acquired by adjusting the antenna height, polarisation and turntable azimuth. Normally, the height range of antenna is 1 m to 4 m, the azimuth range of turntable is 0° to 360°, and the receive antenna has two polarizations Vertical (V) and Horizontal (H).

Above 1GHz：

The EUT is placed on a turntable 1.5 meters above the ground in the chamber, 3 meter away from the antenna. The maximal emission value is acquired by adjusting the antenna height, polarisation and turntable azimuth. Normally, the height range of antenna is 1 m to 4 m, the azimuth range of turntable is 0° to 360°, and the receive antenna has two polarizations Vertical (V) and Horizontal (H).

(a) Radiated Emission Test Set-Up, Frequency Below 30MHz

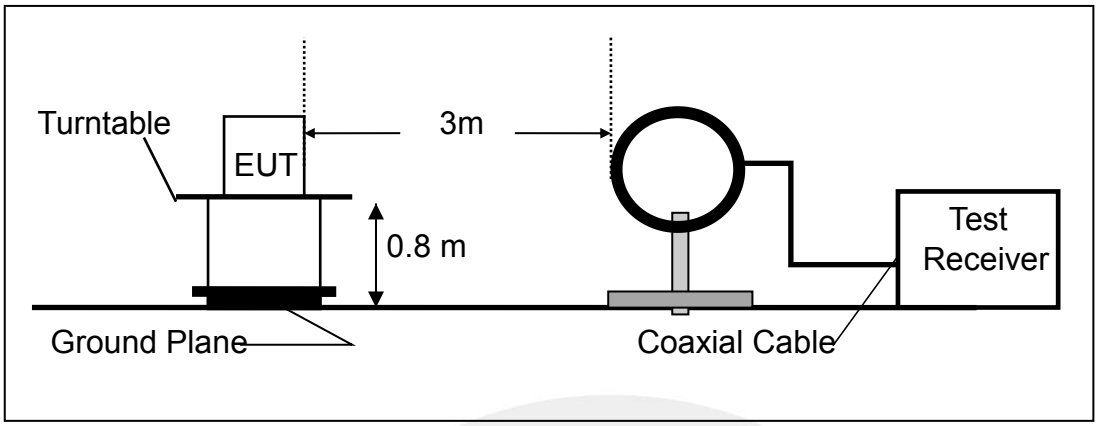

(b) Radiated Emission Test Set-Up, Frequency Below 1000MHz

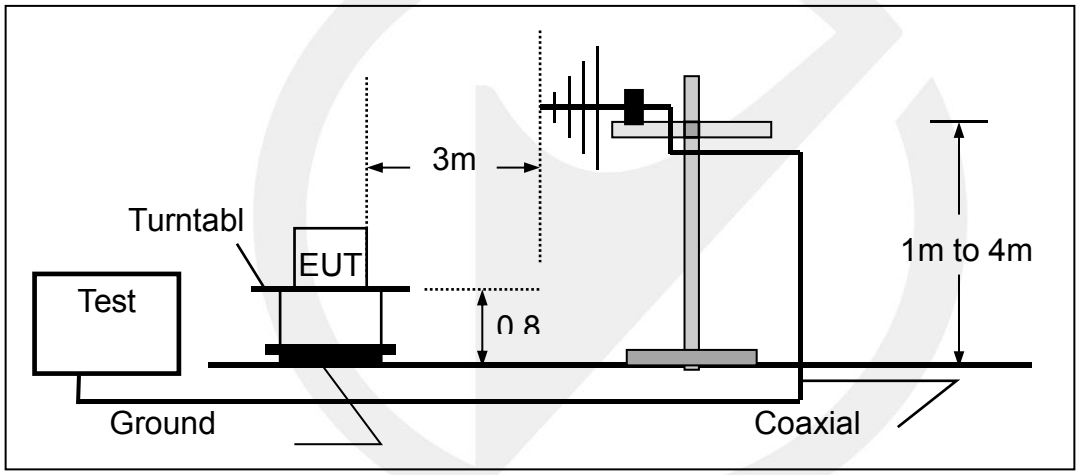

(c) Radiated Emission Test Set-Up, Frequency above 1000MHz

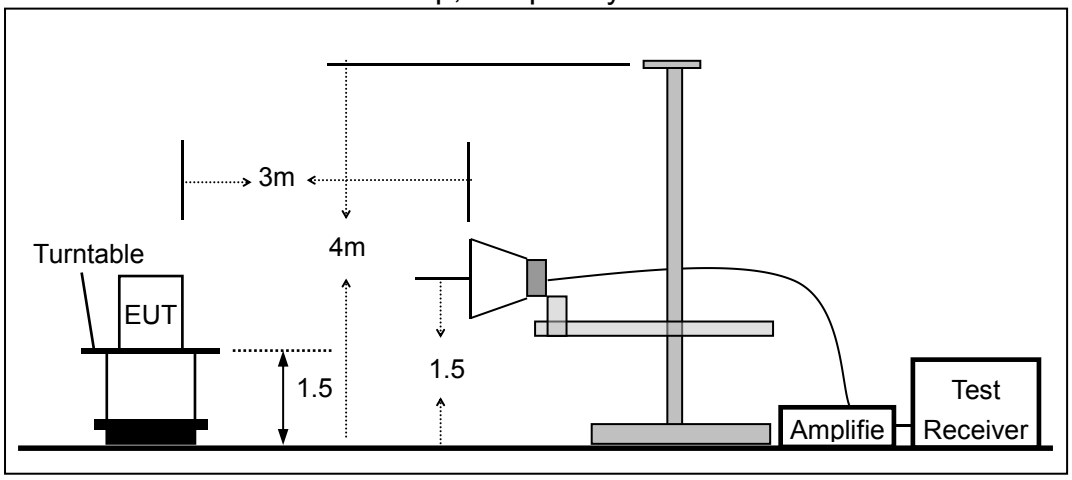

7.3 CONDUCTED EMISSION TEST SETUP

The mains cable of the EUT (maybe per AC/DC Adapter) must be connected to LISN. The LISN shall be placed 0.8 m from the boundary of EUT and bonded to a ground reference plane for LISN mounted on top of the ground reference plane. This distance is between the closest points of the LISN and the EUT. All other units of the EUT and associated equipment shall be at least 0.8m from the LISN.

Ground connections, where required for safety purposes, shall be connected to the reference ground point of the LISN and, where not otherwise provided or specified by the manufacturer, shall be of same length as the mains cable and run parallel to the mains connection at a separation distance of not more than 0.1 m.

According to the requirements in Section 13.1.4.1 of ANSI C63.10-2013 Conducted emissions from the EUT measured in the frequency range between 0.15 MHz and 30 MHz using CISPR Quasi-Peak and average detector mode.

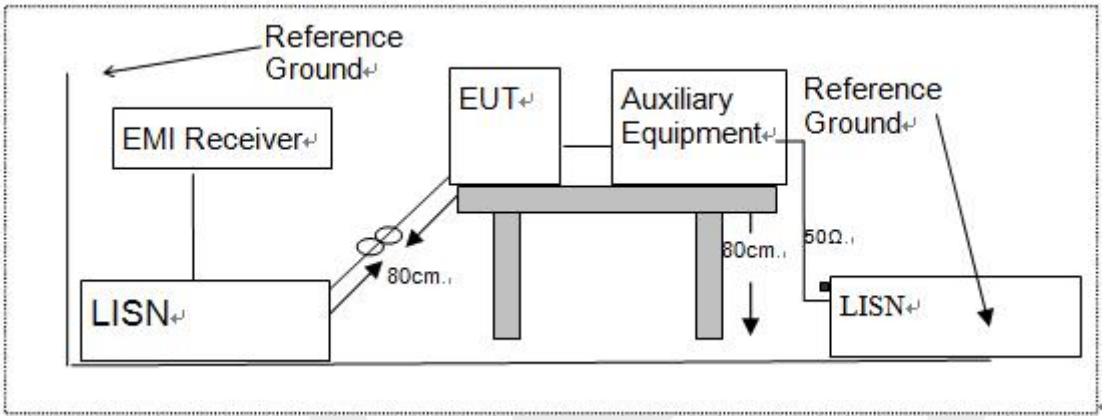

7.4 SUPPORT EQUIPMENT

Auxiliary Equipment List and Details			
Description	Manufacturer	Model	Serial Number
--	--	--	--

Notes:

1. *All the equipment/cables were placed in the worst-case configuration to maximize the emission during the test.*
2. *Grounding was established in accordance with the manufacturer's requirements and conditions for the intended use.*

8 TEST REQUIREMENTS

8.1 BANDWIDTH TEST

8.1.1 Applicable Standard

According to FCC Part 15.249

8.1.2 Conformance Limit

N/A

8.1.3 Test Configuration

Test according to clause 7.1 radio frequency test setup 1

8.1.4 Test Procedure

The EUT was operating in controlled its channel. Printed out the test result from the spectrum by hard copy function.
The RF output of EUT was connected to the spectrum analyzer by RF cable and attenuator. The path loss was compensated to the results for each measurement.
Set to the maximum power setting and enable the EUT transmit continuously
Set RBW ≥ 1% of the 20 dB bandwidth(3KHz)
Set the video bandwidth (VBW) ≥ RBW(10KHz).
Set Span= approximately 2 to 3 times the 20 dB bandwidth
Set Detector = Peak.
Set Trace mode = max hold.
Set Sweep = auto couple.
Measure the maximum width of the emission that is constrained by the frequencies associated with the two outermost amplitude points (upper and lower frequencies) that are attenuated by 20 dB relative to the maximum level measured in the fundamental emission.
Measure and record the results in the test report.

Test Results

Temperature:	Relative Humidity:	ATM Pressure:
26° C	54%	1011 mbar

Operation Mode	Channel Number	Channel Frequency (MHz)	20db Measurement Bandwidth (MHz)	Limit (kHz)	Verdict
GFSK	1	2405.377	1.156	N/A	PASS
	18	2440.705	1.180	N/A	PASS
	36	2477.569	1.192	N/A	PASS

Test Model	Occupied Bandwidth GFSK Channel 1: 2405.377MHz

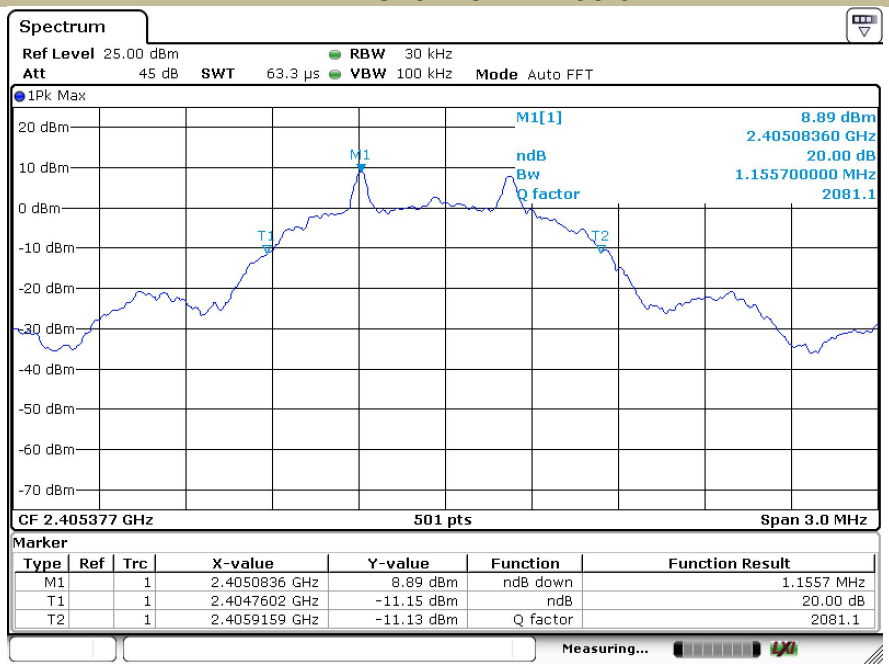

Test Model	Occupied Bandwidth GFSK Channel 18: 2440.705MHz

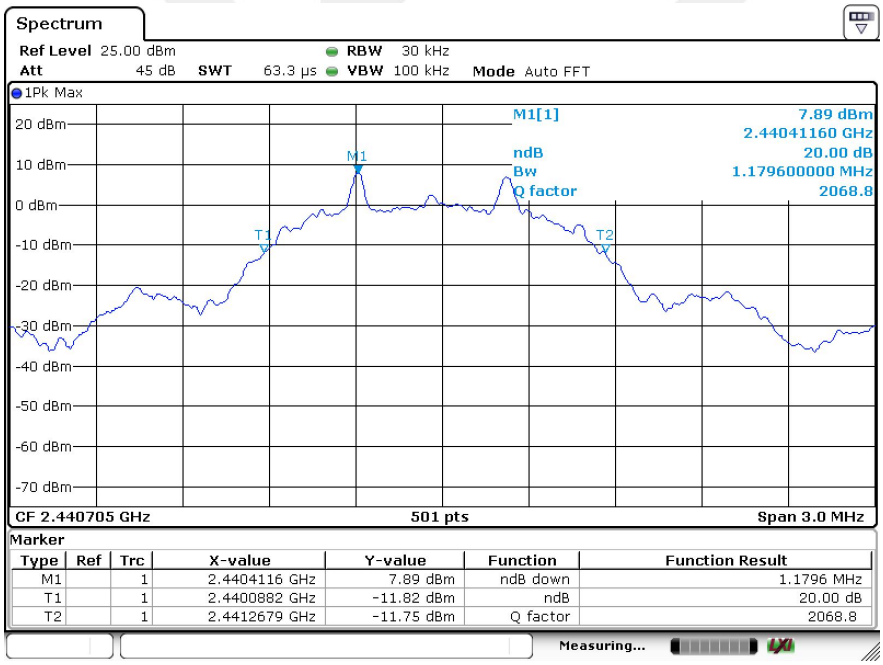

Test Model	Occupied Bandwidth GFSK Channel 36: 2477.569MHz

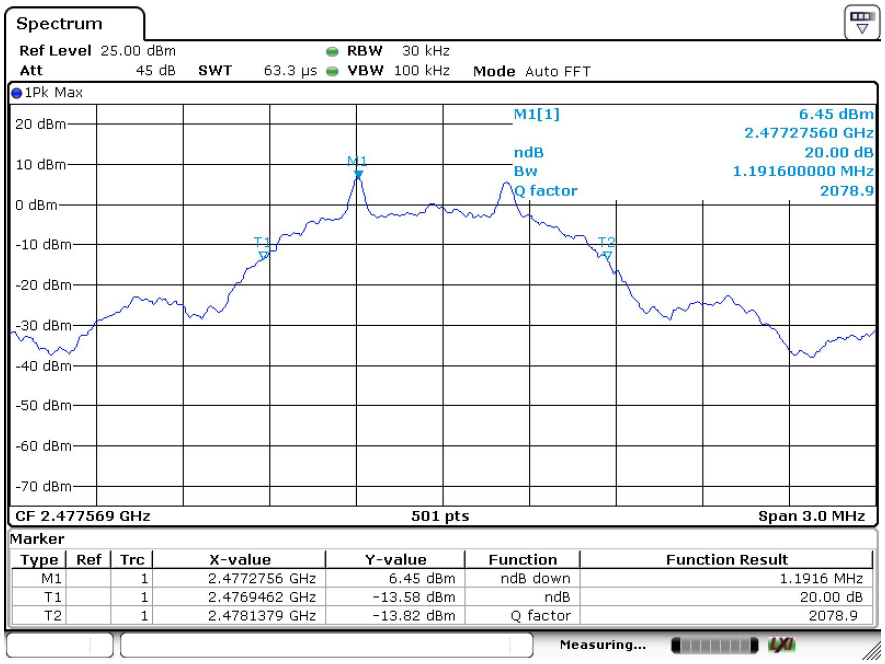

8.2 RADIATED SPURIOUS EMISSION

8.2.1 Applicable Standard

According to FCC Part 15.249 and 15.209

8.2.2 Conformance Limit

According to FCC Part 15.249: radiated emissions which fall in the restricted bands, as defined in §15.205(a), must also comply with the radiated emission limits specified in §15.209(a) (see §15.205(c)).

According to FCC Part15.205, Restricted bands

MHz	MHz	MHz	GHz
0.090-0.110	16.42-16.423	399.9-410	4.5-5.15
10.495-0.505	16.69475-16.69525	608-614	5.35-5.46
2.1735-2.1905	16.80425-16.80475	960-1240	7.25-7.75
4.125-4.128	25.5-25.67	1300-1427	8.025-8.5
4.17725-4.17775	37.5-38.25	1435-1626.5	9.0-9.2
4.20725-4.20775	73-74.6	1645.5-1646.5	9.3-9.5
6.215-6.218	74.8-75.2	1660-1710	10.6-12.7
6.26775-6.26825	123-138	2200-2300	14.47-14.5
8.291-8.294	149.9-150.05	2310-2390	15.35-16.2
8.362-8.366	156.52475-156.52525	2483.5-2500	17.7-21.4
8.37625-8.38675	156.7-156.9	2690-2900	22.01-23.12
8.41425-8.41475	162.0125-167.17	3260-3267	23.6-24.0
12.29-12.293	167.72-173.2	3332-3339	31.2-31.8
12.51975-12.52025	240-285	3345.8-3358	36.43-36.5
12.57675-12.57725	322-335.4	3600-4400	(2)
13.36-13.41			

According to FCC Part15.205, the level of any transmitter spurious emission in Restricted bands shall not exceed the level of the emission specified in the following table

Restricted Frequency(MHz)	Field Strength (μV/m)	Field Strength (dBμV/m)	Measurement Distance
0.009-0.490	2400/F(KHz)	20 log (uV/m)	300
0.490-1.705	2400/F(KHz)	20 log (uV/m)	30
1.705-30	30	29.5	30
30-88	100	40	3
88-216	150	43.5	3
216-960	200	46	3
Above 960	500	54	3

Remark :1. Emission level in dBuV/m=20 log (uV/m)

2. Measurement was performed at an antenna to the closed point of EUT distance of meters.

3. Distance extrapolation factor =40log(Specific distance/ test distance)(dB);
   Limit line=Specific limits(dBuV) + distance extrapolation factor.
   for the frequency ranges below 30 MHz, a narrower RBW is used for these ranges but the measured value should add a RBW correction factor (RBWCF) where RBWCF [dB] =10*lg(100 [kHz]/narrower RBW [kHz]). , the narrower RBW is 1 kHz and RBWCF is 20 dB for the frequency 9 kHz to 150 kHz, and the narrower RBW is 10 kHz and RBWCF is 10 dB for the frequency 150 kHz to 30 MHz.

Field strength of fundamental and Field strength of harmonics Limit:

Fundamental frequency	Field strength of fundamental (millivolts/meter)	Field strength of harmonics (microvolts/meter)
902-928 MHz	50(94 dBV/m)	500(54 dBV/m)
2400-2483.5 MHz	50(94 dBV/m)	500(54 dBV/m)
5725-5875 MHz	50(94 dBV/m)	500(54 dBV/m)
24.0-24.25 GHz	250(108 dBV/m)	2500(68 dBV/m)

As shown in §15.35(b), for frequencies above 1000 MHz, the field strength limits in paragraphs (a) and (b) of this section are based on average limits. However, the peak field strength of any emission shall not exceed the maximum permitted average limits specified above by more than 20 dB under any condition of modulation

For this report

Fundamental Frequency	Field Strength Of Fundamental	Field Strength of Spurious Emissions
2400-2483.5 MHz	AV:94 dBuV/m at 3m distance	AV:54 dBuV/m at 3m distance
	PK:114 dBuV/m at 3m distance	PK:74 dBuV/m at 3m distance

8.2.3 Test Configuration

Test according to clause 7.2 radio frequency test setup 2

8.2.4 Test Procedure

This test is required for any spurious emission that falls in a Restricted Band, as defined in Section 15.205. It must be performed with the highest gain of each type of antenna proposed for use with the EUT. Use the following spectrum analyzer settings:
The EUT was placed on a turn table which is 0.8m above ground plane.
Maximum procedure was performed on the highest emissions to ensure EUT compliance.
Span = wide enough to fully capture the emission being measured
RBW = 1 MHz for f ≥ 1 GHz(1GHz to 25GHz), 100 kHz for f < 1 GHz(30MHz to 1GHz)
VBW ≥ RBW
Sweep = auto
Detector function = peak
Trace = max hold
Follow the guidelines in ANSI C63.10-2013 with respect to maximizing the emission by rotating the EUT, measuring the emission while the EUT is situated in three orthogonal planes (if appropriate), adjusting the measurement antenna height and polarization, etc. A pre-amp and a

high pass filter are required for this test, in order to provide the measuring system with sufficient sensitivity. Allow the trace to stabilize. The peak reading of the emission, after being corrected by the antenna factor, cable loss, pre-amp gain, etc., is the peak field strength, which must comply with the limit specified in Section 15.35(b). Submit this data.
Now set the VBW to 10 Hz, while maintaining all of the other instrument settings. This peak level, once corrected, must comply with the limit specified in Section 15.209. If the dwell time per channel of the hopping signal is less than 100 ms, then the reading obtained with the 10 Hz VBW may be further adjusted by a "duty cycle correction factor", derived from 20log(dwell time/100 ms), in an effort to demonstrate compliance with the 15.209 limit. Submit this data.
Repeat above procedures until all frequency measured was complete.

8.2.5 Test Results

Temperature:	Relative Humidity:	ATM Pressure:
26° C	54%	1011 mbar

■ Spurious Emission below 30MHz (9KHz to 30MHz)

Freq. (MHz)	Ant.Pol. H/V	Emission Level(dBuV/m)		Limit 3m(dBuV/m)		Over(dB)	
		PK	AV	PK	AV	PK	AV
--	--	--	--	--	--	--	--

Note: the amplitude of spurious emission that is attenuated by more than 20dB below the permissible
limit has no need to be reported.
Distance extrapolation factor =40log(Specific distance/ test distance)(dB);
Limit line=Specific limits(dBuV) + distance extrapolation factor

■ Field Strength of the fundamental signal

Freq. (MHz)	Ant. Pol. H/V	Emission Level(dBuV/m)		Limit 3m(dBuV/m)		Over(dB)	
		PK	AV	PK	AV	PK	AV
2405.377	V	82.34	63.29	114	94	-31.66	-30.71
2405.377	H	81.29	63.36	114	94	-32.71	-30.64
2440.705	V	84.72	65.37	114	94	-29.28	-28.63
2440.705	H	83.58	64.24	114	94	-30.42	-29.76
2477.569	V	84.65	65.61	114	94	-29.35	-28.39
2477.569	H	84.23	64.28	114	94	-29.77	-29.72

Note: (1) Correct Factor= Antenna Factor +Cable Loss- Amplifier Gain
(2) Emission Level= Reading Level+Probe Factor +Cable Loss

■ Out of Band Emissions

Test mode: GFSK Frequency: Channel 1: 2405.377MHz

Frequency (MHz)	Polarity	PK(dBuV/m) (VBW=3MHz)	Limit 3m (dBuV/m)	Over(dB	AV(dBuV/m) (VBW=10Hz)	Limit 3m (dBuV/m)	Over(dB)
2383.76	H	48.26	74	-25.74	29.35	54	-24.65
2384.72	V	48.72	74	-25.28	29.65	54	-24.35

Test mode: GFSK Frequency: Channel 36: 2477.569MHz

Frequency (MHz)	Polarity	PK(dBuV/m) (VBW=3MHz)	Limit 3m (dBuV/m)	Over(dB	AV(dBuV/m) (VBW=10Hz)	Limit 3m (dBuV/m)	Over(dB)
2498.88	H	44.18	74	-29.82	26.13	54	-27.87
2499.14	V	49.19	74	-24.81	25.37	54	-28.63

Note: (1) All Readings are Peak Value (VBW=3MHz) and Peak Value (VBW=10Hz).
(2) Emission Level= Reading Level+Correct Factor +Cable Loss.
(3) Correct Factor= Ant_F + Cab_L - Preamp
(4)Data of measurement within this frequency range shown " -- " in the table above means the reading of emissions are attenuated more than 20dB below the permissible limits or the field strength is too small to be measured.

Test Model	Band Emissions Low Test By: King Kong	GFSK	H

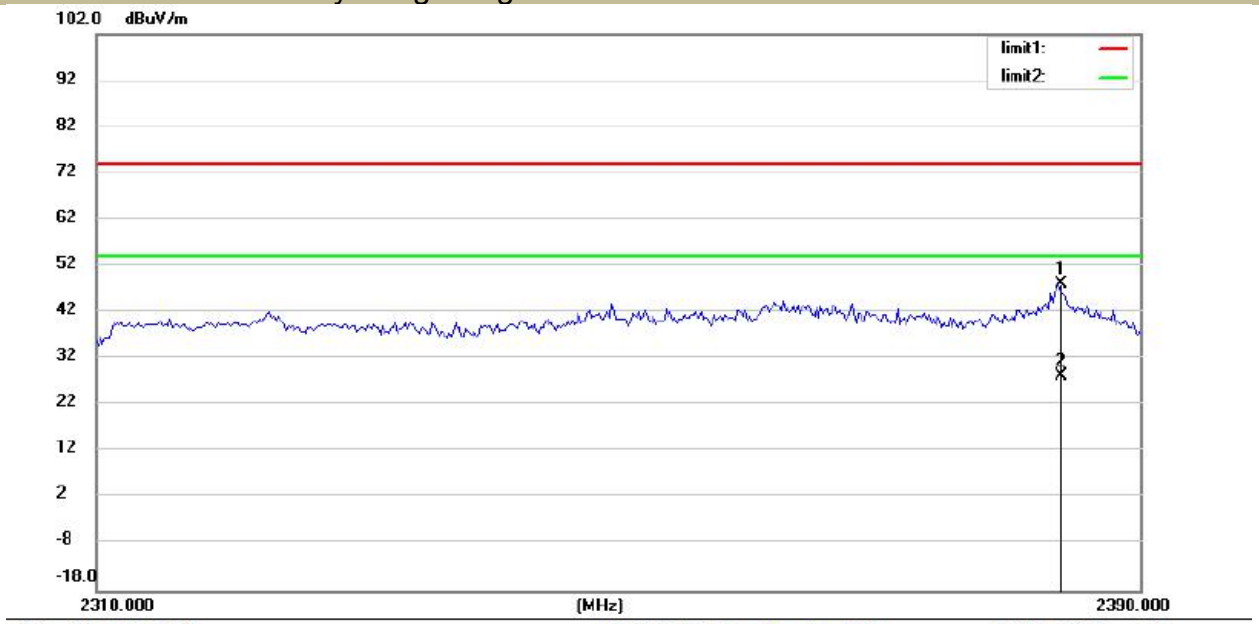

Site Chamber #1	Polarization: *Horizontal*	Temperature:	25
Limit: (RE)FCC PART 15C	Power: AC 120V/60Hz	Humidity:	55 %

Test Model	Band Emissions Low Test By: King Kong	GFSK	V

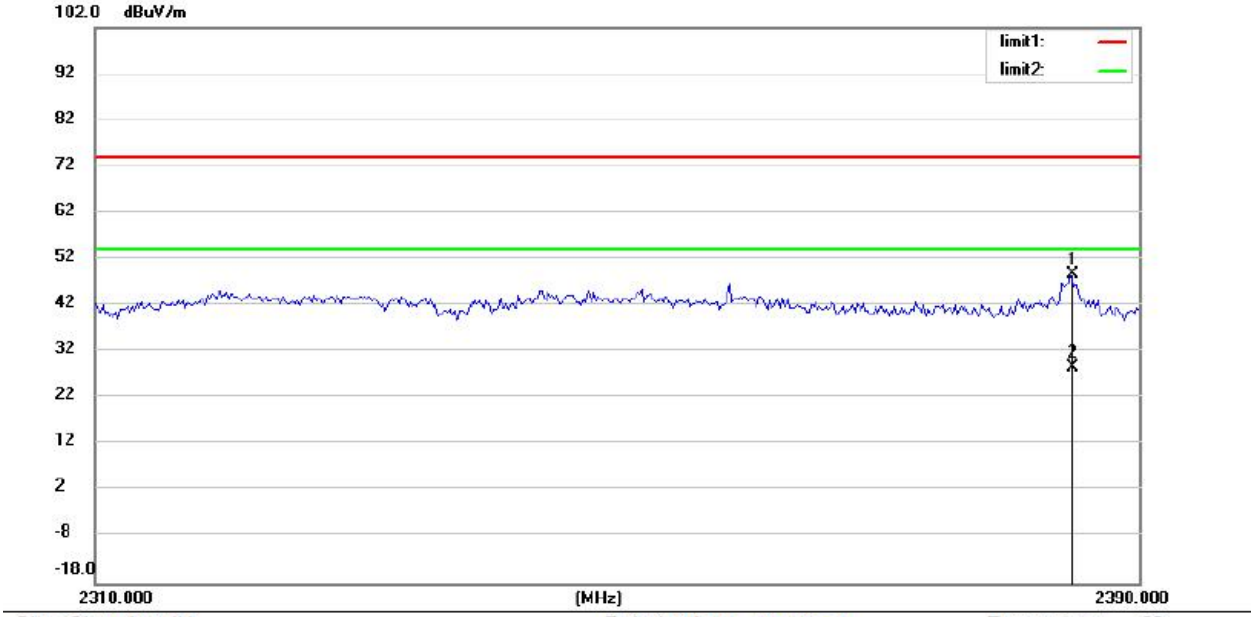

Site Chamber #1	Polarization: *Vertical*	Temperature:	25
Limit: (RE)FCC PART 15C	Power: AC 120V/60Hz	Humidity:	55 %

Test Model	Band Emissions High Test By: King Kong	GFSK	H

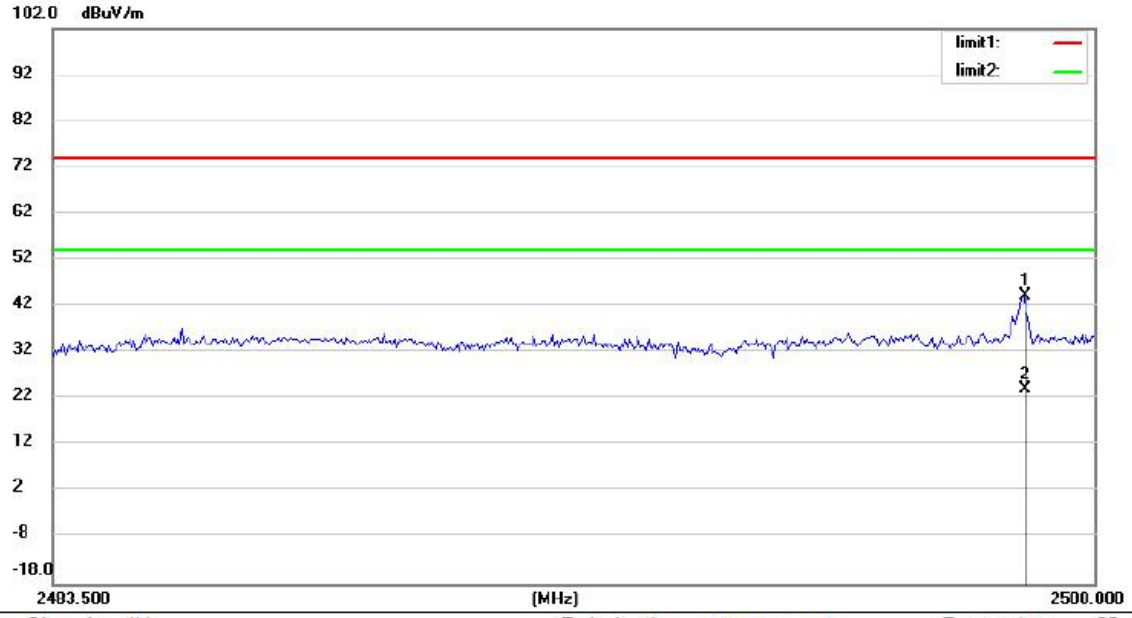

Site Chamber #1	Polarization: *Horizontal*	Temperature:	25
Limit: (RE)FCC PART 15C	Power: AC 120V/60Hz	Humidity:	55 %

Test Model	Band Emissions High Test By: King Kong	GFSK	V

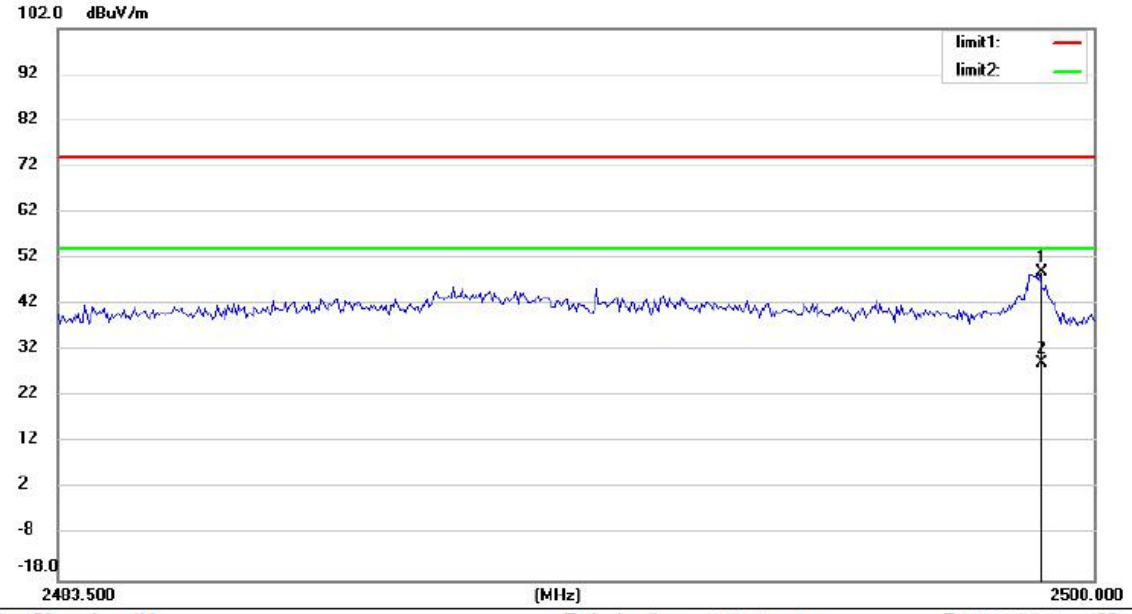

Site Chamber #1	Polarization: *Vertical*	Temperature:	25
Limit: (RE)FCC PART 15C	Power: AC 120V/60Hz	Humidity:	55 %

■ Spurious Emission Above 1GHz (1GHz to 25GHz)

Test mode: GFSK Frequency: Channel 1: 2405.377MHz

Freq. (MHz)	Ant. Pol. H/V	Emission Level(dBuV/m)		Limit 3m(dBuV/m)		Over(dB)	
		PK	AV	PK	AV	PK	AV
4810.754	V	55.78	42.55	74	54	-18.22	-11.45
7216.131	V	53.79	39.74	74	54	-20.21	-14.26
9621.508	V	51.16	37.69	74	54	-22.84	-16.31
4810.754	H	58.50	41.76	74	54	-15.50	-12.24
7216.131	H	52.30	39.48	74	54	-21.70	-14.52
9621.508	H	47.25	36.67	74	54	-26.75	-17.33

Test mode: GFSK Frequency: Channel 18: 2440.705MHz

Freq. (MHz)	Ant. Pol. H/V	Emission Level(dBuV/m)		Limit 3m(dBuV/m)		Over(dB)	
		PK	AV	PK	AV	PK	AV
4885.506	V	55.82	44.07	74	54	-18.18	-9.93
7328.259	V	52.49	39.81	74	54	-21.51	-14.19
9771.012	V	47.57	34.75	74	54	-26.43	-19.25
4885.506	H	55.49	44.07	74	54	-18.51	-9.93
7328.259	H	54.80	40.33	74	54	-19.20	-13.67
9771.012	H	48.35	36.32	74	54	-25.65	-17.68

Test mode: GFSK Frequency: Channel 36: 2477.569MHz

Freq. (MHz)	Ant. Pol. H/V	Emission Level(dBuV/m)		Limit 3m(dBuV/m)		Over(dB)	
		PK	AV	PK	AV	PK	AV
4955.138	V	55.64	40.79	74	54	-18.36	-13.21
7432.707	V	52.95	38.78	74	54	-21.05	-15.22
9910.276	V	49.52	36.06	74	54	-24.48	-17.94
4955.138	H	57.96	42.61	74	54	-16.04	-11.39
7432.707	H	53.41	38.99	74	54	-20.59	-15.01
9910.276	H	47.11	35.27	74	54	-26.89	-18.73

Note: (1) All Readings are Peak Value (VBW=3MHz) and Peak Value (VBW=10Hz).
(2) Emission Level= Reading Level+Correct Factor +Cable Loss.
(3) Correct Factor= Ant_F + Cab_L - Preamp
(4)Data of measurement within this frequency range shown " -- " in the table above means the reading of emissions are attenuated more than 20dB below the permissible limits or the field strength is too small to be measured.

Spurious Emission below 1GHz (30MHz to 1GHz)
All modes have been tested, and the worst result recorded was report as below:

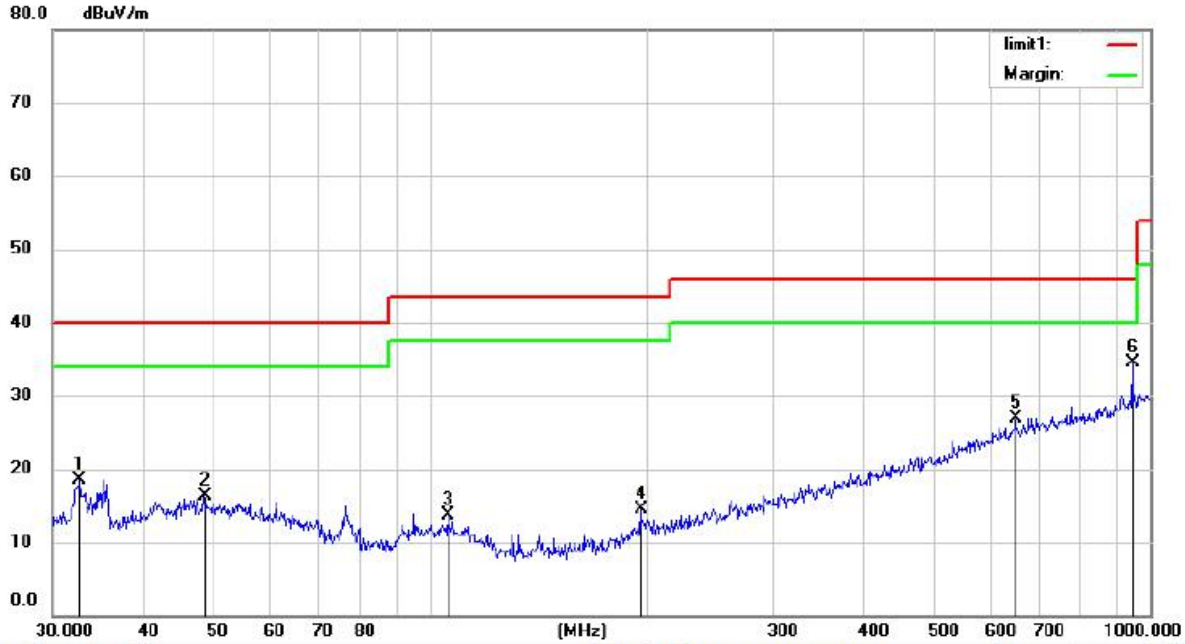

Site Chamber #1 Polarization: *Horizontal* Temperature: 24.1
Limit: (RE)FCC PART 15 C 3m Power: AC 120V/60Hz Humidity: 50 %
Mode: TX 2405.377Mhz
Note:

No.	Mk.	Freq.	Reading Level	Correct Factor	Measure-ment	Limit	Over		Antenna Height	Table Degree	
		MHz	dBuV	dB	dBuV/m	dBuV/m	dB	Detector	cm	degree	Comment
1		32.7486	37.48	-18.98	18.50	40.00	-21.50	QP			
2		48.6720	31.86	-15.65	16.21	40.00	-23.79	QP			
3		106.0126	31.94	-18.22	13.72	43.50	-29.78	QP			
4		196.5098	32.05	-17.57	14.48	43.50	-29.02	QP			
5		649.6597	32.16	-5.17	26.99	46.00	-19.01	QP			
6	*	945.4400	35.08	-0.62	34.46	46.00	-11.54	QP			

*:Maximum data x:Over limit !:over margin Operator: Tom

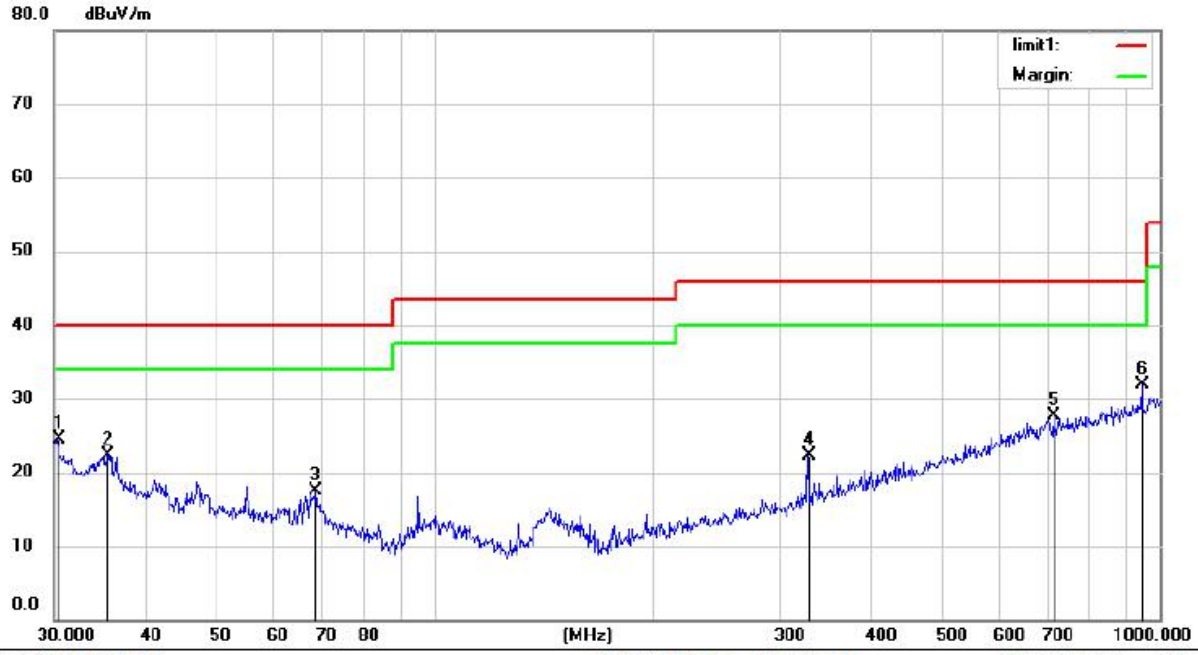

Site Chamber #1 Polarization: *Vertical* Temperature: 24.1

Limit: (RE)FCC PART 15 C 3m Power: AC 120V/60Hz Humidity: 50 %

Mode: TX 2405.377Mhz

Note:

No.	Mk.	Freq.	Reading Level	Correct Factor	Measure-ment	Limit	Over		Antenna Height	Table Degree	
		MHz	dBuV	dB	dBuV/m	dBuV/m	dB	Detector	cm	degree	Comment
1		30.3173	43.27	-18.80	24.47	40.00	-15.53	QP			
2		35.4993	40.65	-18.40	22.25	40.00	-17.75	QP			
3		68.8721	36.69	-19.21	17.48	40.00	-22.52	QP			
4		327.8873	35.19	-12.97	22.22	46.00	-23.78	QP			
5		714.1734	31.80	-4.17	27.63	46.00	-18.37	QP			
6	*	945.4400	32.57	-0.62	31.95	46.00	-14.05	QP			

*:Maximum data x:Over limit !:over margin Operator: Tom

8.3 CONDUCTED EMISSIONS TEST

8.3.1 Applicable Standard

According to FCC Part 15.207(a)

8.3.2 Conformance Limit

Conducted Emission Limit		
Frequency(MHz)	Quasi-peak	Average
0.15-0.5	66-56	56-46
0.5-5.0	56	46
5.0-30.0	60	50

Note: 1. The lower limit shall apply at the transition frequencies
2. The limit decreases in line with the logarithm of the frequency in the range of 0.15 to 0.50MHz.

8.3.3 Test Configuration

Test according to clause 7.3 conducted emission test setup

8.3.4 Test Procedure

The EUT was placed on a table which is 0.8m above ground plane.
Maximum procedure was performed on the highest emissions to ensure EUT compliance.
Repeat above procedures until all frequency measured were complete.

8.3.5 Test Results

Pass

The 120V &240V voltagehave been tested, and the worst result recorded was report as below:

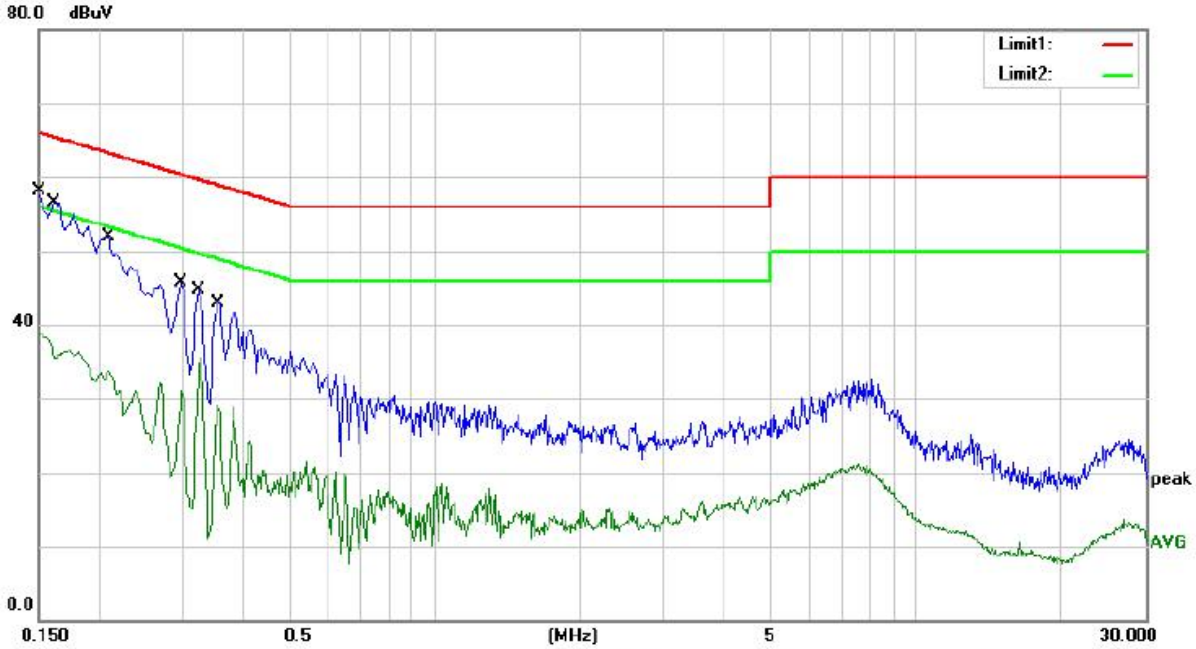

Site site #1 Phase: *L1* Temperature: 24

Limit: FCC PART 15.247_QP (CE) Power: AC 120V/60Hz Humidity: 58 %

Mode: TX 2405.377Mhz

Note:

No.	Mk.	Freq.	Reading Level	Correct Factor	Measure-ment	Limit	Over		
		MHz	dBuV	dB	dBuV	dBuV	dB	Detector	Comment
1	*	0.1500	47.16	10.94	58.10	66.00	-7.90	QP	
2		0.1500	28.19	10.94	39.13	56.00	-16.87	AVG	
3		0.1620	45.66	10.94	56.60	65.36	-8.76	QP	
4		0.1620	25.56	10.94	36.50	55.36	-18.86	AVG	
5		0.2100	40.93	10.94	51.87	63.21	-11.34	QP	
6		0.2100	22.76	10.94	33.70	53.21	-19.51	AVG	
7		0.2980	34.67	10.95	45.62	60.30	-14.68	QP	
8		0.2980	20.20	10.95	31.15	50.30	-19.15	AVG	
9		0.3220	33.66	10.95	44.61	59.66	-15.05	QP	
10		0.3220	24.51	10.95	35.46	49.66	-14.20	AVG	
11		0.3540	32.02	10.95	42.97	58.87	-15.90	QP	
12		0.3540	18.16	10.95	29.11	48.87	-19.76	AVG	

*:Maximum data x:Over limit !:over margin Comment: Factor build in receiver. Operator: Ccyf

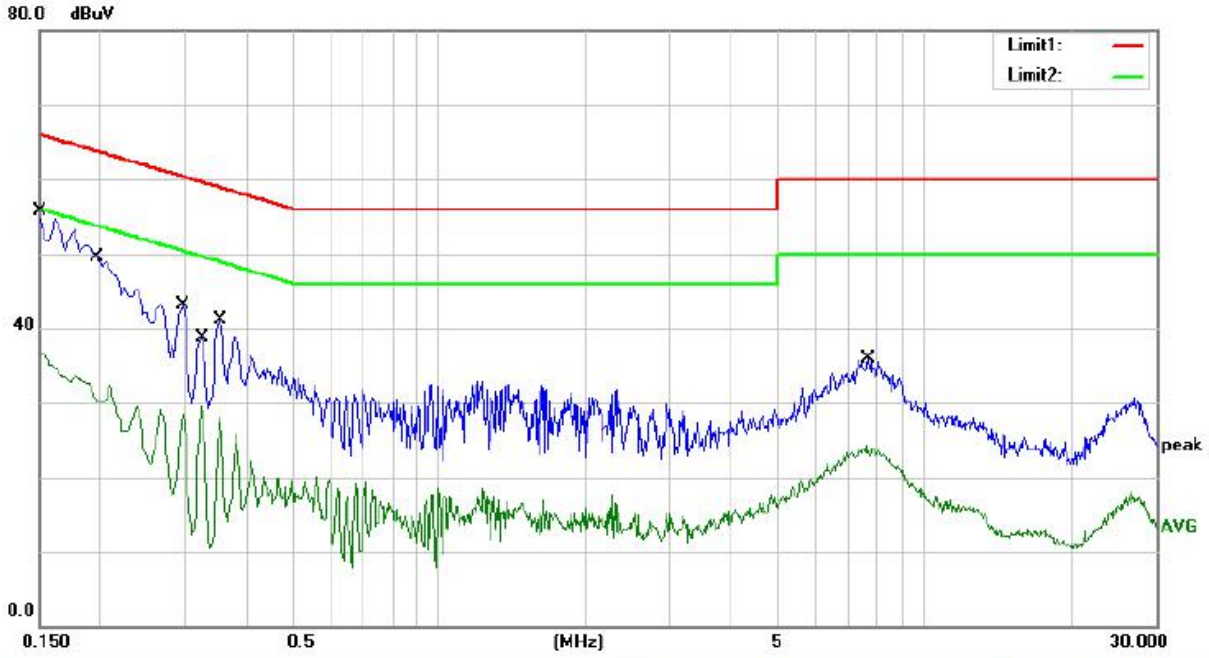

Site site #1 Phase: N Temperature: 24

Limit: FCC PART 15.247_QP (CE) Power: AC 120V/60Hz Humidity: 58 %

Mode: TX 2405.377Mhz

Note:

No.	Mk.	Freq.	Reading Level	Correct Factor	Measure-ment	Limit	Over		
		MHz	dBuV	dB	dBuV	dBuV	dB	Detector	Comment
1	*	0.1500	44.72	10.94	55.66	66.00	-10.34	QP	
2		0.1500	25.90	10.94	36.84	56.00	-19.16	AVG	
3		0.1997	37.95	10.94	48.89	63.62	-14.73	QP	
4		0.1997	21.33	10.94	32.27	53.62	-21.35	AVG	
5		0.2980	32.23	10.95	43.18	60.30	-17.12	QP	
6		0.2980	17.50	10.95	28.45	50.30	-21.85	AVG	
7		0.3260	27.69	10.95	38.64	59.55	-20.91	QP	
8		0.3260	18.59	10.95	29.54	49.55	-20.01	AVG	
9		0.3540	30.10	10.95	41.05	58.87	-17.82	QP	
10		0.3540	17.07	10.95	28.02	48.87	-20.85	AVG	
11		7.6620	24.89	10.95	35.84	60.00	-24.16	QP	
12		7.6620	13.33	10.95	24.28	50.00	-25.72	AVG	

*:Maximum data x:Over limit !:over margin Comment: Factor build in receiver. Operator: Ccyf

8.4 ANTENNA APPLICATION

8.4.1 Antenna Requirement

Standard	Requirement
FCC CRF Part 15.203	An intentional radiator shall be designed to ensure that no antenna other than that furnished by the responsible party shall be used with the device. The use of a permanently attached antenna or of an antenna that uses a unique coupling to the intentional radiator shall be considered sufficient to comply with the provisions of this section. The manufacturer may design the unit so that a broken antenna can be replaced by the user, but the use of a standard antenna jack or electrical connector is prohibited. This requirement does not apply to carrier current devices or to devices operated under the provisions of §15.211, §15.213, §15.217, §15.219, or §15.221. Further, this requirement does not apply to intentional radiators that must be professionally installed, such as perimeter protection systems and some field disturbance sensors, or to other intentional radiators which, in accordance with §15.31(d), must be measured at the installation site. However, the installer shall be responsible for ensuring that the proper antenna is employed so that the limits in this part are not exceeded.

For intentional device, according to FCC 47 CFR Section 15.203, an intentional radiator shall be designed to ensure that no antenna other than that furnished by the responsible party shall be used with the device.

8.4.2 Result

PASS.

- The EUT has 1 antennas: an Internal Antenna for 2.4G, antenna has a gain of 0 dBi;
  - ☒ Antenna use a permanently attached antenna which is not replaceable.
  - ☐ Not using a standard antenna jack or electrical connector for antenna replacement
  - ☐ The antenna has to be professionally installed (please provide method of installation)

Note:which in accordance to section 15.203, please refer to the internal photos.

Detail of factor for radiated emission

Frequency(MHz)	Ant_F(dB)	Cab_L(dB)	Preamp(dB)	Correct Factor(dB)
0.009	20.6	0.03	\	20.63
0.15	20.7	0.1	\	20.8
1	20.9	0.15	\	21.05
10	20.1	0.28	\	20.38
30	18.8	0.45	\	19.25
30	11.7	0.62	27.9	-15.58
100	12.5	1.02	27.8	-14.28
300	12.9	1.91	27.5	-12.69
600	19.2	2.92	27	-4.88
800	21.1	3.54	26.6	-1.96
1000	22.3	4.17	26.2	0.27
1000	25.6	1.76	41.4	-14.04
3000	28.9	3.27	43.2	-11.03
5000	31.1	4.2	44.6	-9.3
8000	36.2	5.95	44.7	-2.55
10000	38.4	6.3	43.9	0.8
12000	38.5	7.14	42.3	3.34
15000	40.2	8.15	41.4	6.95
18000	45.4	9.02	41.3	13.12
18000	37.9	1.81	47.9	-8.19
21000	37.9	1.95	48.7	-8.85
25000	39.3	2.01	42.8	-1.49
28000	39.6	2.16	46.0	-4.24
31000	41.2	2.24	44.5	-1.06
34000	41.5	2.29	46.6	-2.81
37000	43.8	2.30	46.4	-0.3
40000	43.2	2.50	42.2	3.5

9 PHOTOS OF EUT

DC5V

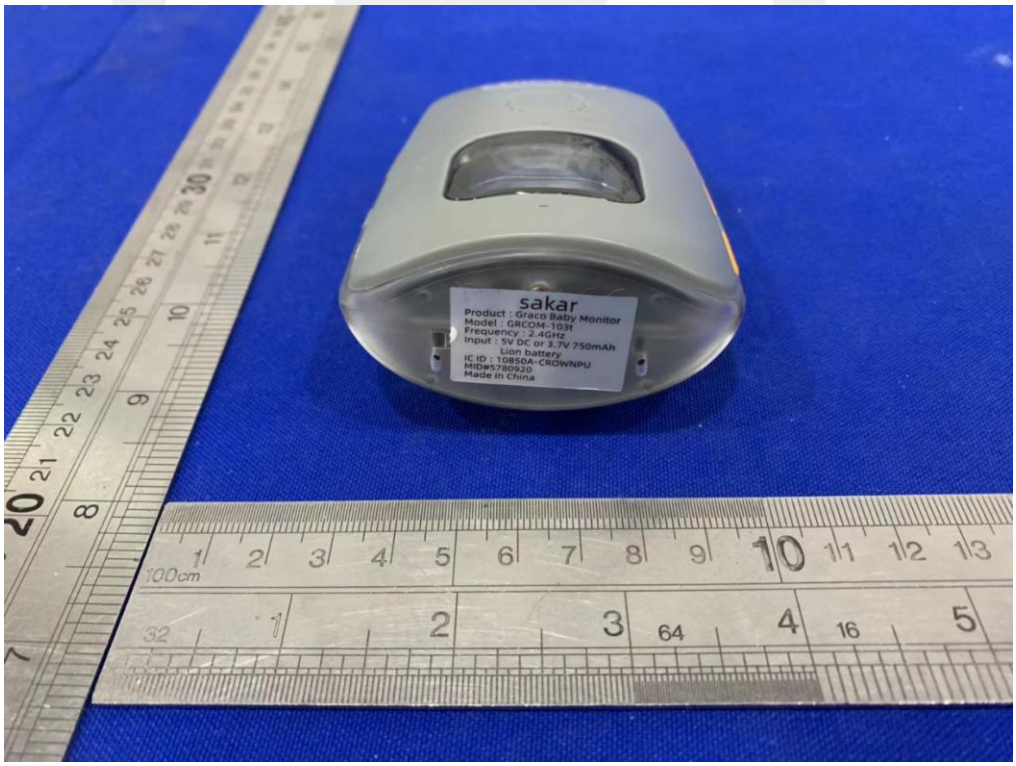
sakar
Product : Graco Baby Monitor
Model : GRCOM-103t
Frequency : 2.4GHz
Input : 5V DC or 3.7V 750mAh
Lion battery
IC ID : 10850A-CROWNPU
MID#5780920
Made in China

GRACO

GRACO

DC5V

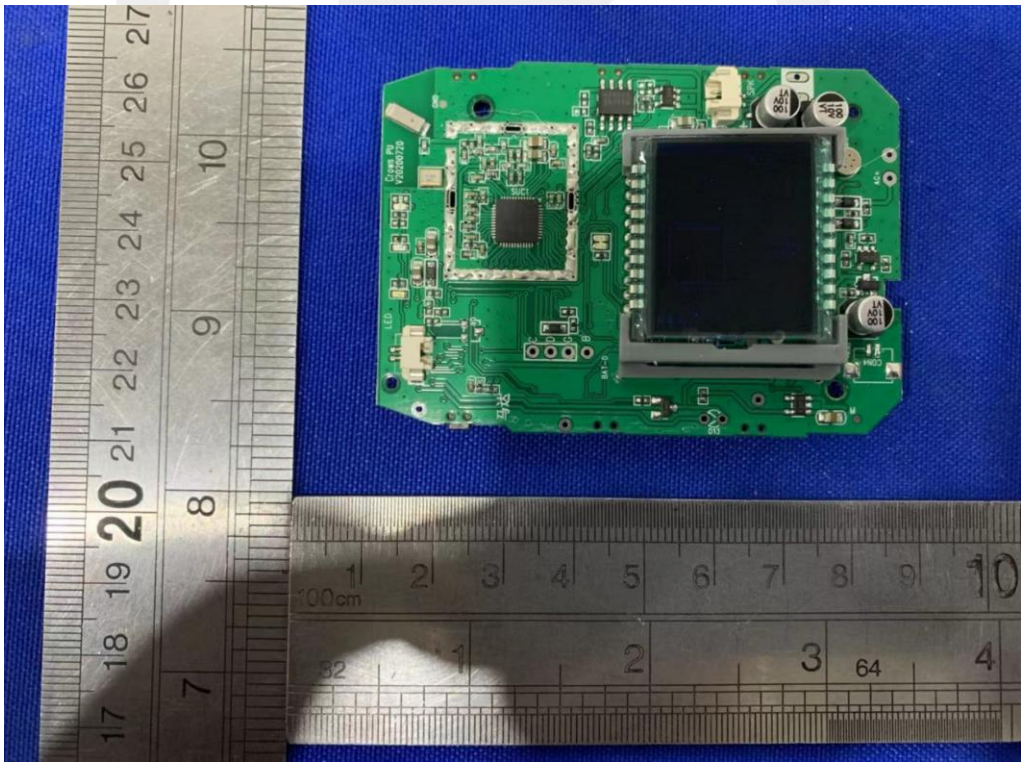

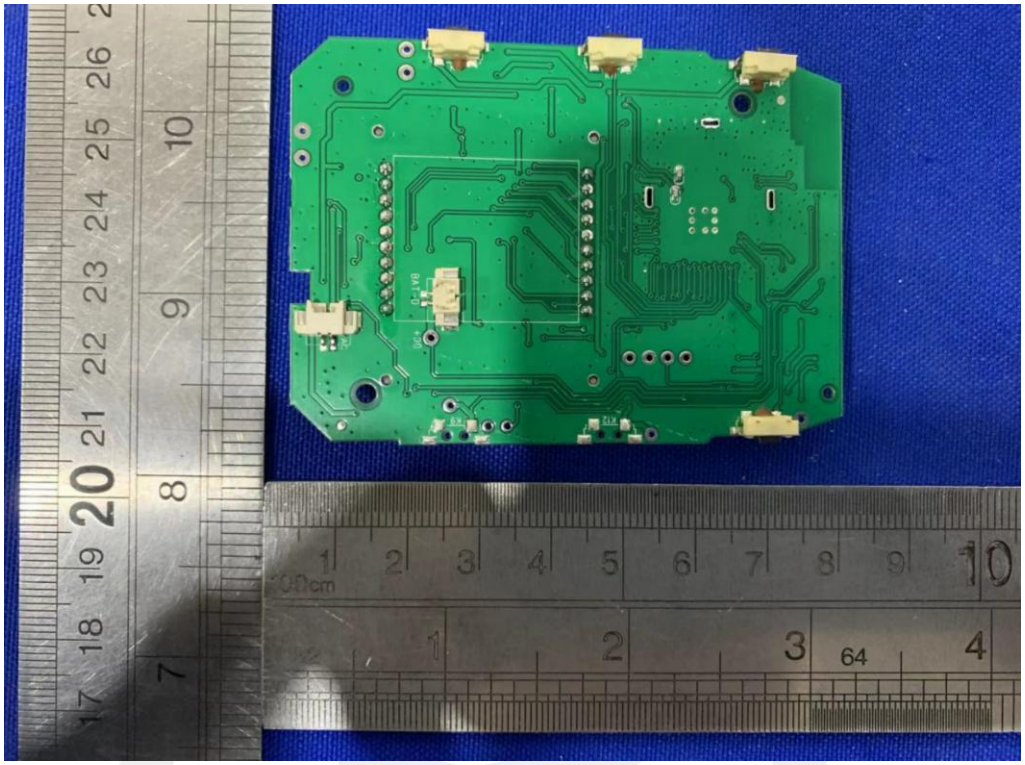

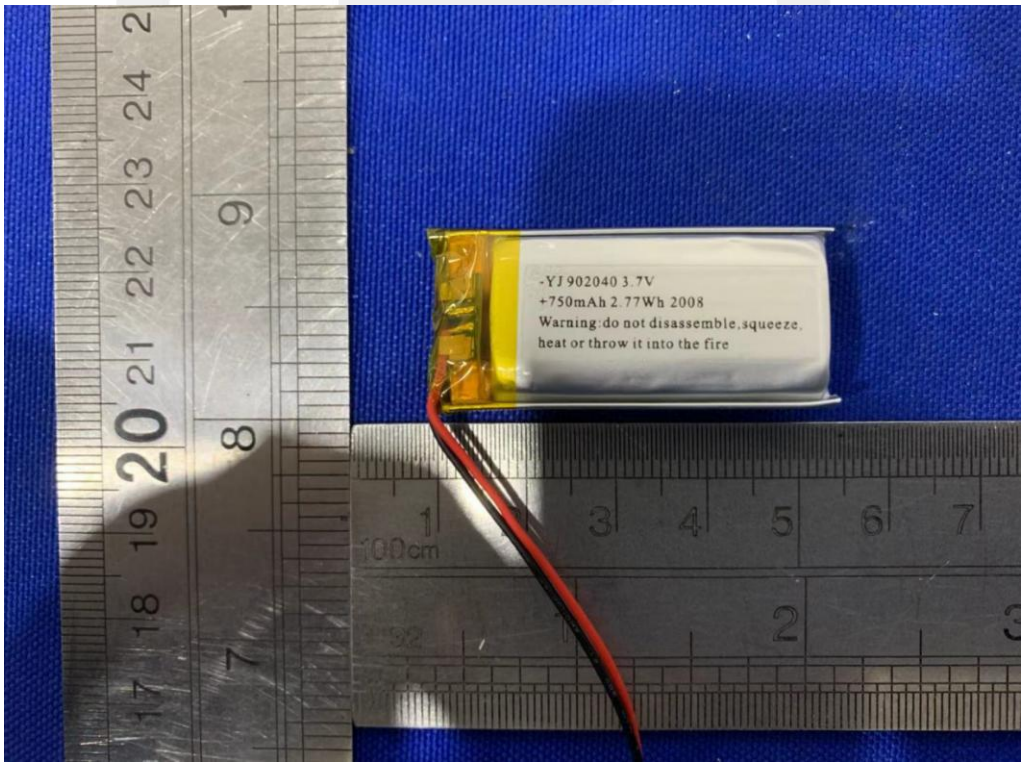
-YJ 902040 3.7V
+750mAh 2.77Wh 2008
Warning:do not disassemble,squeeze,
heat or throw it into the fire

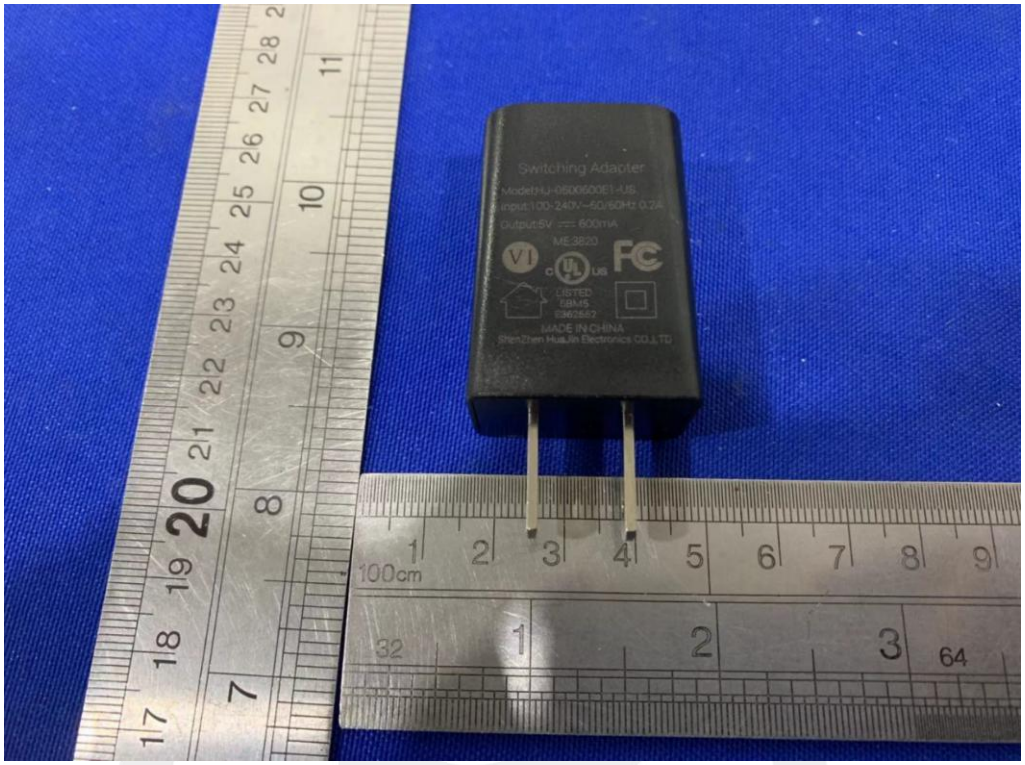
Switching Adapter
MADE IN CHINA
100cm