SureCall®
RAISE YOUR BARS

Fusion7™

All-in-One Cellular, Wi-Fi, and HDTV Booster Kit

User Guide

Table of Contents

Thank you for purchasing SureCall's Fusion7 cellular, Wi-Fi and HDTV booster kit. If you have any questions while assembling this kit please contact SureCall's tech support team at: 1-888-365-6283 or email us at: support@surecall.com.

Before installing your booster you need to register it with your carrier. You can do so online at the following urls:

Verizon: http://www.verizonwireless.com/wcms/consumer/register-signal-booster.html
AT&T: https://securec45.securewebsession.com/attsignalbooster.com/
T-Mobile: https://www.signalboosterregistration.com/
Sprint: https://www.sprint.com/legal/fcc_boosters.html
U.S. Cellular: http://www.uscellular.com/uscellular/support/fcc-booster-registration.jsp

How It Works — Pg. 3

Package Contents — Pg. 4-5

Installation Overview — Pg. 6

Installing Your Hardware

- Finding the Strongest Signal — Pg. 7
- Installing the Outside Anntenna — Pg. 8-9
- Installing the Insides Anntenna — Pg. 10-11
- Installing Signal Booster — Pg. 12-13

Configure Gain Setting — Pg. 14

Troubleshooting — Pg. 15-16

Specification — Pg. 16

Kitting Information — Pg. 17

Warranty — Pg. 18-19

Safety Information — Pg. 19

SureCall's Fusion7 is a high-quality bidirectional signal booster that enhances cellular signals to areas that are prone to weak cellular coverage. In addition, the Fusion7 has a built-in Wi-Fi router that extends users current network coverage. An HDTV booster is also integrated in the Fusion7 which brings locally aired HDTV stations, and with the built-in Wi-Fi it provides enhanced streaming video through Netflix® and other on-demand streaming media providers.

The cellular component of the Fusion7 works with two antennas:

- An inside antenna that communicates with your cell phone.
- An outside antenna that communicates with the cell tower.

Signals sent from a cell tower are received by the outside antenna, amplified by the booster and then sent to your phone via the inside antenna. When your phone transmits, the signal is sent to the inside antenna, and then sent to the cell tower via the outside antenna.

The Wi-Fi component of the Fusion7 works by connecting your external modem to the WAN port on the Fusion 7 with the provided Ethernet cable. The booster will then extend your existing Wi-Fi throughout the coverage area.

The HDTV component of the Fusion7 works with one HDTV antenna. HDTV broadcasts are picked up by the outside antenna, boosted through the Fusion7 which connects to your television though the provided RG6 cable enabling the television to access a greater number of high-definition television stations.

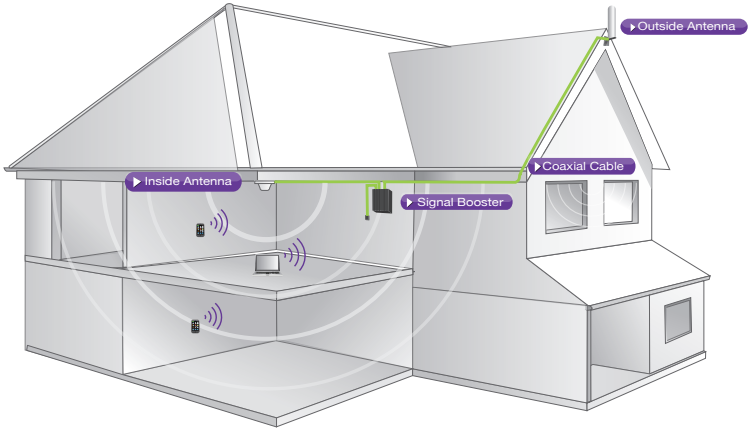

Package Contents

1. Unpack all package contents. For missing or damaged items, contact your reseller.
2. Turn over the signal booster and record the model and serial number for reference:

   Serial #: _____

   Purchase Date: _____
3. Keep the carton and packing material to store the product in case you need to return it.

   Standard Fusion7 signal booster packages include the following items:

- One SureCall Fusion7 booster with power supply
- One outside antenna
- Cable for connecting the outside antenna to the signal booster
- One inside antenna
- Cable for connecting the inside antenna to the signal booster

Fusion7

SC-400 Cables and RG6

Outside Antenna (Option)

Omni

Yagi

Inside Antenna

Dome

HDTV antenna

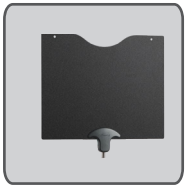

Warning: Unauthorized antennas, cables, and/or coupling devices are prohibited by FCC new rules. Please contact the FCC for details: 1-888-CALL- FCC. Changes or modifications not expressly approved by SureCall could void the user's authority to operate the equipment.

Note: Fusion7 is available in four kits that are customized to your particular needs. Please determine which kit you have from the following list:

Model	Package Options
SC-SEPTH/O-OD-Kit	1 Oudoor Omni, 1HDTV and 1 Inside Dome Antenna, 30’ SC-400 coax cable and 50’ and 75’ RG6 cable
SC-SEPTH/O-YP-Kit	1 Oudoor Yagi, 1HDTV and 1 Inside Dome Antenna, 30’ SC-400 coax cable and 50’ and 75’ RG6 cable

For a detailed description, see Kitting Information on page 21.

	Antenna Type	Model No.	Usage Coverage
	Omni Outdoor Antenna	SC-288W	Omni antennas are ideal for topographies with minimal obstacles, they have 360° reception
	Yagi Outdoor Antenna	SC-230W-S	Yagi antennas are designed to reach carrier towers that are up to 30 miles away
	Dome Antenna	SC-222W	Dome antennas are designed for central locations with 360° coverage

Note: Due to the recent change of our company name from Cellphone-Mate (CM) to SureCall (SC) we have changed the prefix on all of our antennas, cables and accessories from CM to SC-.

Before You Install

Step 1. Make sure you have positioned the booster close enough to an existing electrical outlet,TV and Modem.

Step 2. Make sure you have sufficient cable length between proposed outside antenna, HDTV antenna location and booster connector.

Step 3 Make sure you have sufficient cable length between proposed inside antenna location and booster connector. Additional cable may be purchased from your dealer, if needed.

Section 1: Cellular Installation

Step 1. Find the outside area that has the strongest cellular signal (See page 7 for directions as needed)

Step 2. Install the outside cellular antenna in the area identified in step 1. (See page 8-9 for directions as needed)

Step 3. Install the inside antenna. (See page 10-11 for directions as needed)

Step 4. Mount the signal booster, connect the outside and inside antenna cables to the signal booster, and connect the booster to an AC power source. (See page 13-14 for directions if needed)

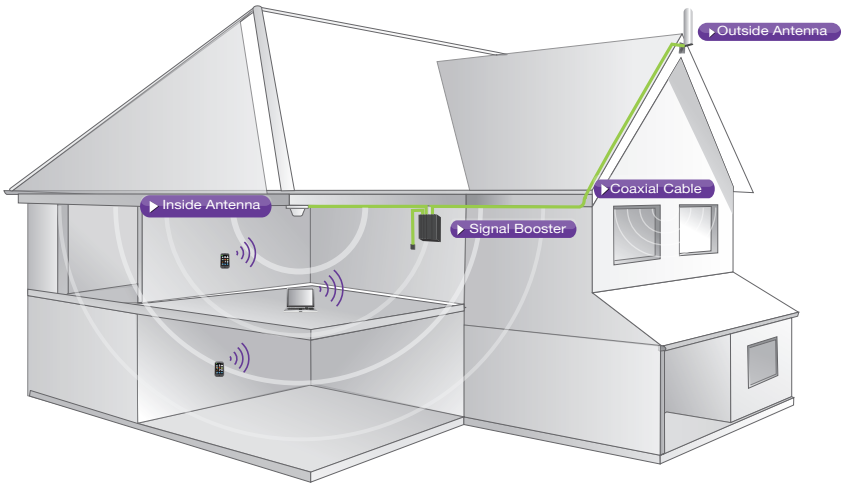

FCC 27.50(d)(4) Statement: Fixed, mobile and portable (hand-held) stations operating in the 1720-1755 MHz band are limited 1 Watt EIRP. Fixed stations operating in this band are limited to a maximum antenna height of 10 meters above ground. Mobile and portable stations operating in this band must employ a means for limiting power to the minimum necessary for successful communications.

Step 1. Find the area with the Strongest Signal

The signal booster requires a minimum cellular signal of low –100 dBm. Signal readings usually appear as a negative number (for example, -85). The more bars you get, the closer the dB gets to zero. Aim for a signal close to -50dB. Signals stronger than -50dB may cause the booster to shut down (see the graph below). If you have an omni outside antenna and your signal is too weak you may need a yagi antenna, which can be aimed at the closest antenna tower. Before installing the outside antenna, find the area with the strongest cellular signal source from your service provider by following the directions below. You can also go to *www.antennasearch.com* to find the general location of carrier towers.

Measure the strength of the existing cellular signal in various locations.

- Apple iPhones: Dial *3001#12345#* and press Call. In the top-left corner, a dB number appears instead of bars.
- Android devices: download apps such as “Network Signal Info” in the Google Play store to measure signal strength. Search check real signal strength to find other cell signal measurement apps.
- Internet: go to www.speedtest.net to test 3G and 4G data rates.

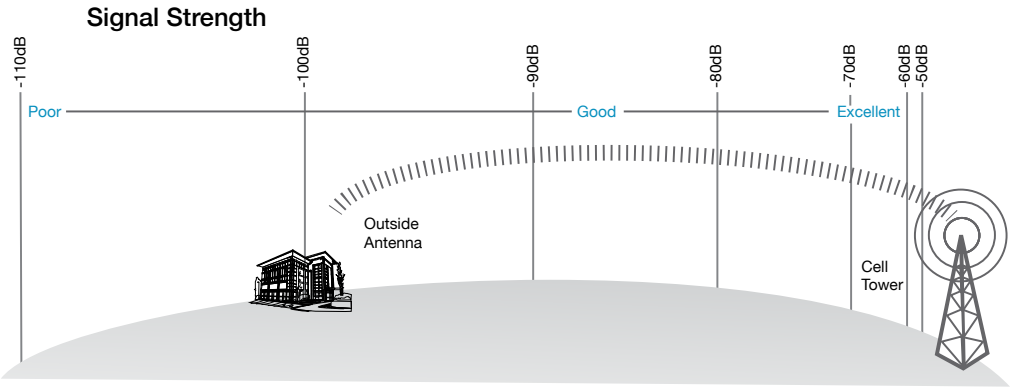

2. Select a location away from buildings, walls, trees, hills, and other terrain features that can block or reflect wireless signals (12-inch clear radius is recommended).

Note: Where you install your outside antenna in relation to the carrier’s cell phone tower also determines signal strength. Although cell phone carriers try to place towers for maximum coverage, local ordinances and terrain features can restrict tower locations, which can limit signal strength at your location.

Step 2. Install the Outside Cellular Antenna

1. Outside omni antennas receive and send signals in a 360º radius. Yagi, or directional antennas work best when facing the direction of cellular phone towers. Mount the outside antenna as high as possible. If you are installing a Yagi antenna set it up facing the cellular tower in the area where you located the best signal source (see step 1 on the previous page).

2. Make sure the mounting area has at least a 12-inch radius clear of obstructions and other radiating elements.

3. Do not collocate antennas or operate the outside antenna with any other antenna or signal booster.

4. Run the SC-400 cable from the outside antenna to the signal booster. Hand tighten the connection

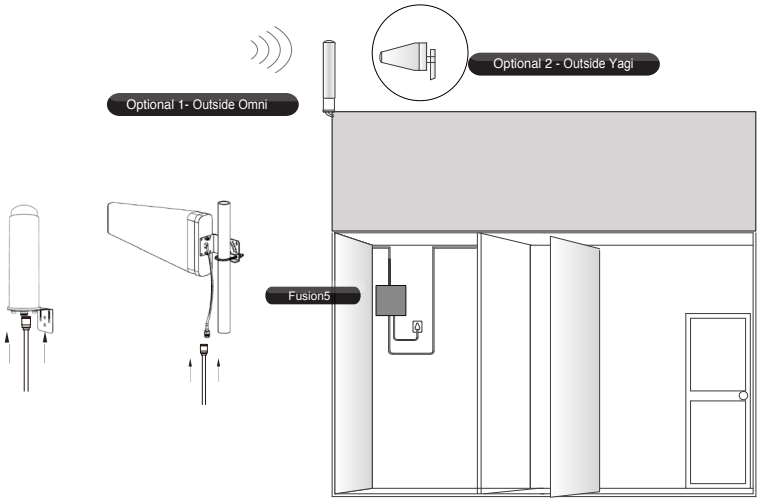

IMPORTANT: For boosters enhancing T-Mobile's AWS frequencies, the FCC has stated for consumer signal boosters operating as a fixed station in the 1710 - 1755 MHz uplink 2110 - 2155 downlink bands, the users or installation manual must contain the 30 foot height restriction requirements per FCC 27.50(d)(4).

Fusion7's omni antennas come with equipment for mounting on a vertical wall. For best results the antenna should be mounted in an upright position.

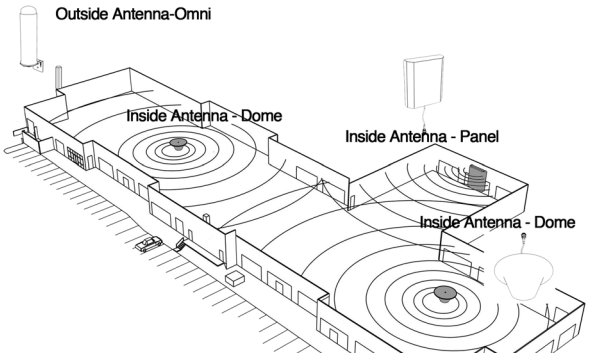

Step 1: Unscrew antenna from L-mounting bracket on antenna base with hands, or wrench, if needed.

Step 2: Using vertical plate of bracket, mark position of desired placement with pencil or marker.

Step 3: Unscrew nut on end of stucco screw and remove it along with lock washer and regular washer.

Step 4: Place vertical plate into desired location and tap the screws head first, along with sleeve, into stucco 1⁄2" to 5/8" deep into place.

Step 5: In this order, place washer, lock washer and nut on each screw and tighten until secure. When tightening screw, sleeve will expand to secure plate. Screw antenna securely back onto horizontal plate.

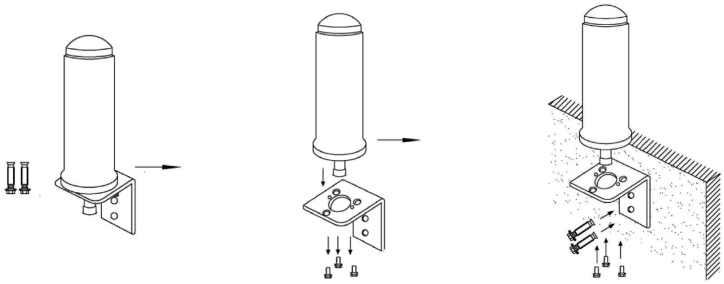

Note: If desired surface for installation plate is wood or concrete, wood or masonry screws for L-plate will have to be purchased separately.

Step 3. Install the Inside Antenna

Inside antennas come in omni-directional (dome) and flat panel versions.

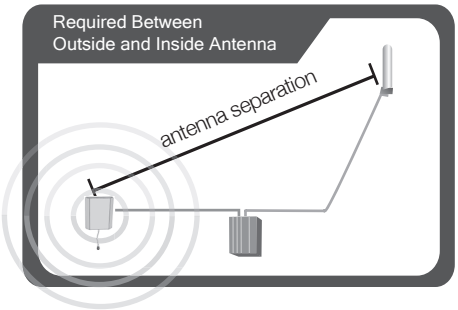

Antenna Separation Table

Amplifier gain	Min. separation (ad)
40dB	5-6’
45dB	15-20’
50dB	50’
55dB	60’
65dB	75-80’
72dB	100’-110’

Note: As you can see from the table above, acquiring the recommended inside and outside antenna separation optimizes coverage significantly. Any reduced antenna separation reduces the booster’s coverage.

1. If your indoor antenna is a dome type, mount it on the ceiling in a central location.
2. If your indoor antenna is a flat panel, install it against a wall or surface projecting the area where you want reception. Point the antenna away from the outside antenna. To avoid interference stay a minimum distance of 3 feet from the panel antenna.
3. Run the SC-400 cable from the inside antenna to the signal booster. Connect the inside antenna to the booster connector marked INSIDE (see page 13
4. Hand tighten the connection.

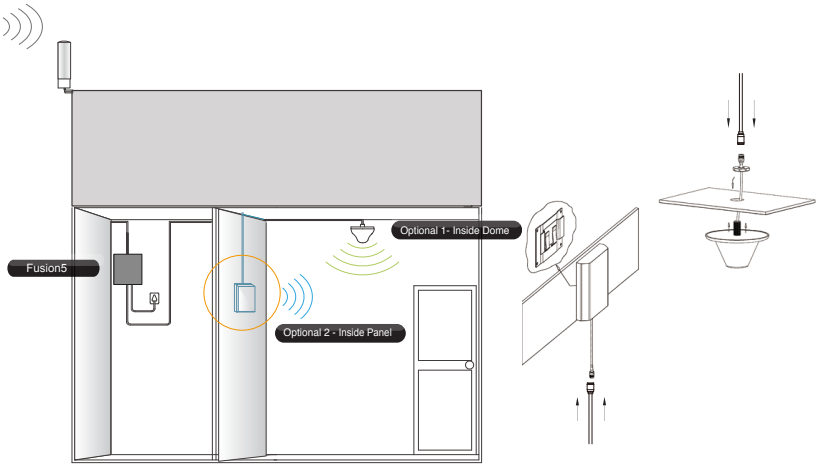

Note: see next page for outside antenna installation details.

The SC-222W multi-band plastic antenna is an omni-directional interior antenna that gathers signals from all sides. Range of antenna is dependent on three factors: 1) physical obstructions, 2) power generated by booster and 3) reception from outside signal received and distributed by outside antenna.

Besides the antenna itself, parts include mounting equipment for either a flat horizontal surface or a wall. It should be mounted in an upright position for best results. You can also install your interior antenna above the ceiling panel provided your ceiling isn't made of a material that could obstruct signals from the booster.

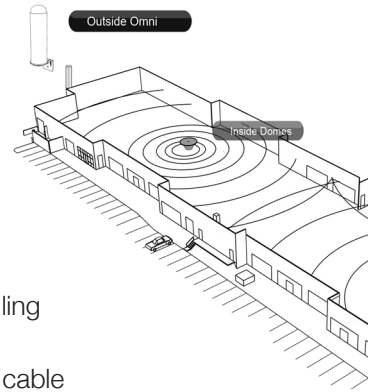

Step 1: Drill a 35mm diameter hole in the ceiling. The ceiling thickness should be 20mm, maximum.

Step 2: Unscrew fixing nut from antenna. Place antenna cable through hole. Screw the fixing nut back onto antenna and cable on crawl space side of ceiling and fasten.

Step 3: Attach the **N-Female** connection from the interior antenna to the cable leading to the connector labeled **INSIDE,** on your booster.

Step 4: Tighten fixing nut to secure antenna (do not over-tighten).

- Storage and transportation: Store and place in non-extreme room-temperature and dry environment
- Attention: This antenna should not be used near open fire or flame

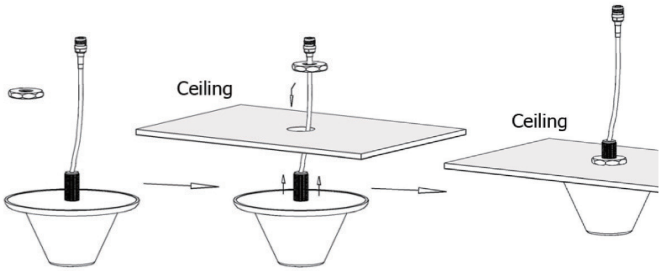

Step 4. Install the Signal Booster

1. Select a location close to a working AC outlet. Do not expose the signal booster to excessive heat, direct sunlight, moisture, and airtight enclosures.
2. If you'd like to mount the booster to a wall, mark location of screw tabs on the wall in the desired location
3. Use supplied screws or appropriate screws for surface of mounting location and drill through screw tab holes on booster.
4. Connect the outside antenna cable to the signal booster connector marked OUTSIDE. Hand-tighten the connection.
5. Connect the inside antenna cable to the signal booster connector marked INSIDE. Hand-tighten the connection.
6. Connect the AC power cord to the signal booster.
7. Connect the plug on the other end of the 110V AC power outlet.
8. Turn the booster's power switch on.

Section 2 “ HDTV Installation

1.) Attach inside Coax cable to the HDTV1 access port on the side of the booster.
2.) Attach the other end of the cable to the Antenna port on the back of the television.
3.) Attach the outside Coax cable to the HDTV out port on the side of the booster.
4.) Connect the other end of the outside coax cable to the outside HDTV antenna.

Scanning Local Television Channels.

On your TV’s remote control press the Input or Source button, from there you’ll select “TV” or “Air”. Consult you TV manual for detailed instructions.
After selecting “Antenna” or “Air” press the menu button. Choose the antenna option followed by Auto Program. You may then need to select the Air button where you can start searching for local channels.
The TV will automatically search all available stations. Once the scan is complete, you can exit your TV menu and begin watching free, high-definition television

Section 3: WiFi Connection

Installation Instructions:

1). Plug the Ethernet cable from your modem/router into the WAN port on the side of the booster.

2). Power on the booster. The WAN and WLAN lights on the Fusion7 status LEDs will light up.

3). On your computer, tablet or cell phone search available wireless networks and choose Tenda_38CB18, a security password isn’t needed.

4). Enjoy enhanced WiFi throughout your workplace or home.

Booster Hardware

The following image shows the key hardware components on the cellullar booster. Refer to this image as you install your Fusion5 kit components.

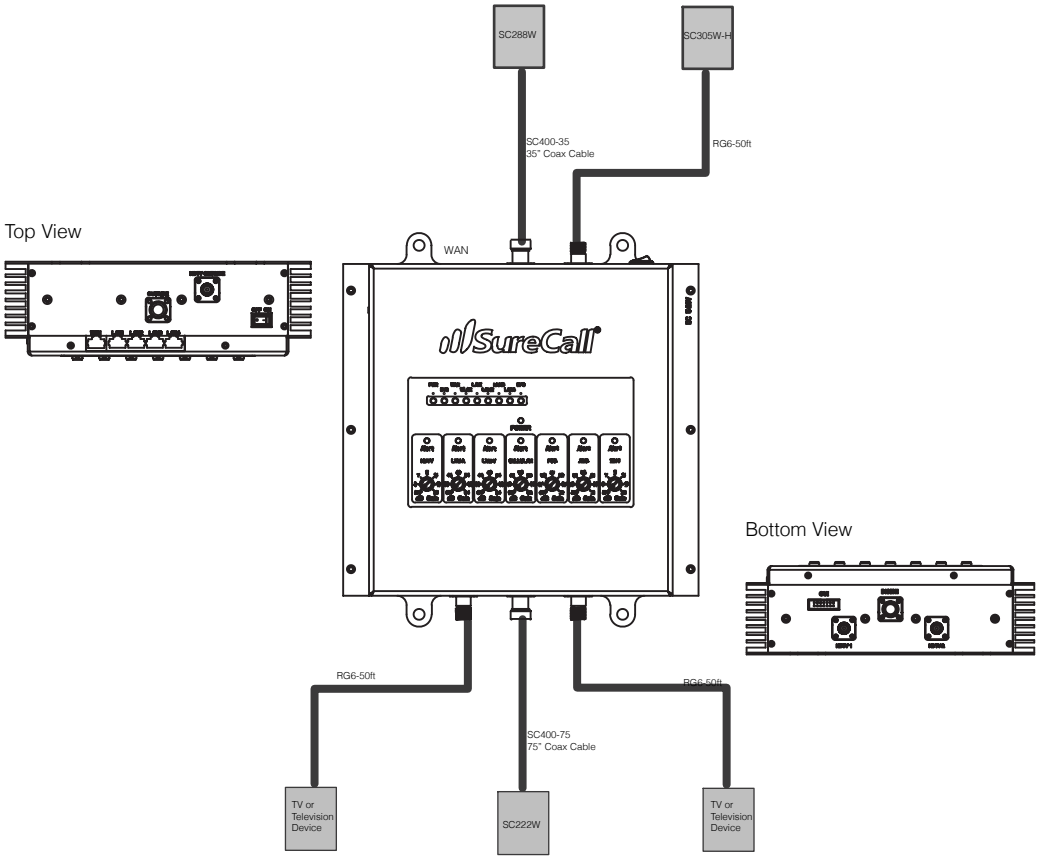

The signal booster turns on automatically.

Note: If the Power LED does not turn ON or the Alert LEDs continue to flash, (see PAGES 15-16).This booster is rated for 5-20V input voltage. DO NOT use the booster with a higher voltage power supply. This can damage the booster, cause personal injury, and void your warranty

Step 5. Configure Gain Settings

1. Find the PCS, Cellular, and LTE/AWS dials on top of the signal booter.
2. Set the dials according to the coverage area and the distance between the indoor and outdoor antennas (see next page)

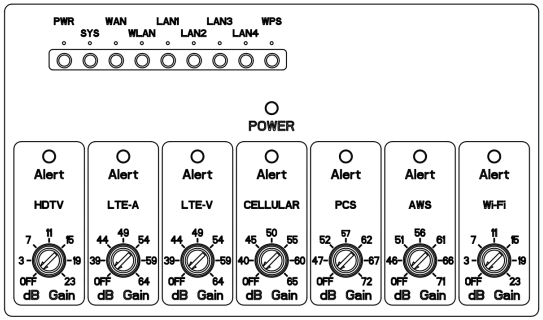

If Coverage Area is ...	And Antenna Separation is ...	Set All Dial to ...
3000 - 6000 square feet	60 - 80 feet	65 (default setting)
2000 - 4000 square feet	50 - 75 feet	60
1500 - 2000 square feet	40 - 60 feet	60
1000 -1500 square feet	35 - 50 feet	60
1000 square feet and below	30 - 35 feet	60

Note: As you can see from the table above, acquiring the recommended indoor and outdoor antenna separation optimizes coverage significantly. Any reduced antenna separation reduces the booster's cellular signal capabilities.

If you Want to Improve Coverage

1. Find a location that receives a stronger signal and relocate the outside antenna to that location.
2. Increase the distance between the outside and inside antennas.
3. Be sure your signal booster's dB gain is turned up to maximum gain on each dial.

WARNING: Do not adjust the uplink and downlink dB attenuation settings more than 20dB. This could cause the affected band to shut down

In the event you encounter a problem, follow the suggestions below to resolve the issue.

Problem	Resolution
Signal booster has no power	Verify that the booster switch is turned on. Connect the power supply to an alternate power source. Be sure the AC outlet is working and is not controlled by a wall switch that can cut power to the outlet. If the green **POWER LED** on the signal booster is OFF, return the power supply to SureCall. Contact tech support at 1-888- 365-6283 or support@surecall.com, or go to www.surecall.com and log on to online support to receive a Return Merchandise Authorization (RMA).
After installing your signal booster system, you have no signal or reception.	Check the strength of the outside signal as close as you can to the outside antenna. (see instructions on page 7) Double-check all signal booster and antenna cable connections. Be sure your signal booster's dB gain is turned up to full power on each dial. (see page14)
LED flashing yellow	This means that the Automatic Gain Control (AGC) is adjusting which is part of the boosters normal operation
One of the red LEDs next to the dials on your signal booster is flashing red.	Turn down the dB gain on the dial until the light goes OFF or turns yellow. Be sure the inside panel antenna is facing away from the outside antenna. Use the recommended antenna separation: 72dB: 100-110 ft. separation 65dB: 75-80 ft. separation 55dB: 60 ft. separation 50dB: 50 ft. separation 45dB: 15-20 ft. separation 40dB: 5-6 ft. separation
Your signal booster restarted and shut down for 15 minutes, and is now shut down permanently.	Each SureCall signal booster is equipped with Auto Shutdown to prevent cell tower interference. The outside antenna may be too close to the cell tower. Try moving the outside antenna to a location that provides more separation from the cellular tower. If you can't attain enough separation try lowering the elevation of the antenna to decrease the signal from the tower.
The red LED goes ON.	More antenna separation is needed from the cellular tower. You can try lessening the signal by placing the outside antenna behind a structure or sheet metal barrier. You can also add an attenuator between the cable and booster connection to decrease the signal.
The Power LED does not turn ON	Be sure the AC outlet is working and is not controlled by a wall switch that can cut power to the outlet.

Problem	Resolution
The **Alert** LEDs flash after the initial activation period.	Lower the dial above the blinking LED by 5dB (for example, from 65 to 60) and monitor the bars on your cell phone to see whether reception has improved.
The **Alert** LEDs continue to flash	The singal booster shuts down automatically, and then restarts after 60 seconds. Turn down the **PCS, Cellular** or **LTE/AWS** dial that is oscillating dial that is to prevent the signal booster from shutting down autimatically.
Your signal booster has no power.	Verify that the switch on the power supply is turned on and red LED is ON. Connect the power supply to an alternate power source. Be sure the power source is not controlled by a switch that can remove power from the outlet. Check the green POWER LED on the signal booster. If it is OFF, return the power supply to SureCall. Contact tech support at 1-888-365-6283 or support@surecall.com, or go to www.surecall.com and log on to online support to receive an RMA.

Product Name	Fusion7
Uplink Frequency Range (MHz):	698-716 / 776 – 787 / 824-849 1850-1910/ 1710-1755
Downlink Frequency Range (MHz):	728-746 / 746 – 757 / 869-894 1930-1990 / 2110-2155
Input Impedance:	50 Ω / 75 Ω (HDTV)
Maximum Gain:	Cellular 72dB / WiFi 23dB / HDTV 23dB.
Noise Figure:	8 dB
VSWR:	≤2.0
Supported Standards:	CDMA, WCDMA, GSM, EDGE, HSPA+, EVDO, LTE and all cellular standards
AC Input:	Input AC110V, 60 Hz; Output DC 5-20V
Maximum Output Power:	1 Watt EIRP
Cable:	SC-400 / RG6
RF Connectors:	RTNC / N Female
Power Consumption:	<50W
Operation Temperature:	-4ºF to +158ºF
Dimensions:	10” x 9” x 2.25”
Weight:	9.5 lbs
FCC (USA):	RSNFUSION-7

Kitting Information

Component	Product Number Description / Description	Gain / Loss			
		LTE-A (Verizon & ATT) 700 Mhz	Cellular 800 MHz	PCS 1900 MHz	AWS (T- Mobile) 1700 \ 2100 MHz
Outside Antennas*	SC-288W	3 dBi	3 dBi	4 dBi	4 dBi
	SC-230W	10 dBi	10 dBi	10 dBi	10 dBi
Outside Cable	RG6 50FT	HDTV –6.22 dB/-6.68dB			
	SC-400-75NN (75 Feet)	-4.22dB	–4.41dB	–6.17dB	–6.54 dB
Inside Antenna*	SC-248W	7 dBi	7 dBi	10 dBi	10 dBi
	SC-222W	3 dBi	3 dBi	6 dBi	6 dBi
Inside Cable	SC-400-30NN (30 Feet)	–2.05dB	–2.12 dB	–2.83 dB	–2.98 dB

*All equivalent antennas and cables are suitable for use with the Fusion7 booster.

Note: Due to the recent change of our company name from Cellphone-Mate (CM) to SureCall (SC) we have changed the prefix on all of our antennas, cables and accessories from CM to SC-.

Three-Year Product Warranty

SureCall warrants its products for three years from the date of purchase against defects in workmanship and/or materials. Specifications are subject to change. The three-year warranty only applies to products meeting the latest FCC Certification Guidelines stated on 2/20/2013 and going into effect April 30, 2014. A two-year warranty applies to any products manufactured before May 1, 2014.

Products returned by customers must be in their original, un-modified condition, shipped in the original or protective packaging with proof-of-purchase documentation enclosed, and a Return Merchandise Authorization (RMA) number printed clearly on the outside of the shipping container.

Buyers may obtain an RMA number for warranty returns by calling the SureCall Return Department toll-free at 1-888-365-6283. Any returns received by SureCall without an RMA number clearly printed on the outside of the shipping container will be returned to sender. In order to receive full credit for signal boosters, all accessories originally included in the signal booster box must be returned with the signal booster. (The Buyer does not need to include accessories sold in addition to the signal booster, such as antennas or cables.)

This warranty does not apply to any product determined by SureCall to have been subjected to misuse, abuse, neglect, or mishandling that alters or damages the product's physical or electronic properties.

SureCall warrants to the Buyer that each of its products, when shipped, will be free from defects in material and workmanship, and will perform in full accordance with applicable specifications. The limit of liability under this warranty is, at SureCall's option, to repair or replace any product or part thereof which was purchased up to THREE YEARS after May 1, 2014 or TWO YEARS for products purchased before May 1, 2014, as determined by examination by SureCall, prove defective in material and/or workmanship. Warranty returns must first be authorized in writing by SureCall. Disassembly of any SureCall product by anyone other than an authorized representative of SureCall voids this warranty in its entirety. SureCall reserves the right to make changes in any of its products without incurring any obligation to make the same changes on previously delivered products.

As a condition to the warranties provided for herein, the Buyer will prepay the shipping charges for all products returned to SureCall for repair, and SureCall will pay the return shipping with the exception of products returned from outside the United States, in which case the Buyer will pay the shipping charges.

The Buyer will pay the cost of inspecting and testing any goods returned under the warranty or otherwise, which are found to meet the applicable specifications or which are not defective or not covered by this warranty.

Products sold by SureCall shall not be considered defective or non-conforming to the Buyer's order if they satisfactorily fulfill the performance requirements that were published in the product specification literature, or in accordance with samples provided by SureCall. This warranty shall not apply to any products or parts thereof which have been subject to accident, negligence, alteration, abuse, or misuse. SureCall makes no warranty whatsoever in respect to accessories or parts not supplied by it.

Limitations of Warranty, Damages and Liability:

EXCEPT AS EXPRESSLY SET FORTH HEREIN, THERE ARE NO WARRANTIES, CONDITIONS, GUARANTEES, OR REPRESENTATIONS AS TO MERCHANTABILITY, FITNESS FOR A PARTICULAR PURPOSE, OR OTHER WARRANTIES, CONDITIONS, GUARANTEES, OR REPRESENTATIONS, WHETHER EXPRESSED OR IMPLIED, IN LAW OR IN FACT, ORAL OR IN WRITING. SURECALL AGGREGATE LIABILITY IN DAMAGES OR OTHERWISE SHALL NOT EXCEED THE PAYMENT, IF ANY, RECEIVED BY CELLPHONE-MATE, INC. FOR THE UNIT OF PRODUCT OR SERVICE FURNISHED OR TO BE FURNISHED, AS THE CASE MAY BE, WHICH IS THE SUBJECT OF CLAIM OR DISPUTE. IN NO EVENT SHALL SURECALL BE LIABLE FOR INCIDENTAL, CONSEQUENTIAL, OR SPECIAL DAMAGES, HOWSOEVER CAUSED.

All matters regarding this warranty shall be interpreted in accordance with the laws of the State of California, and any controversy that cannot be settled directly shall be settled by arbitration in California in accordance with the rules then prevailing of the American Arbitration Association, and judgment upon the award rendered may be entered in any court having jurisdiction thereof. If one or more provisions provided herein are held to be invalid or unenforceable under applicable law, then such provision shall be ineffective and excluded to the extent of such invalidity or unenforceability without affecting in any way the remaining provisions hereof.

SAFETY INFORMATION
This is a CONSUMER device.
BEFORE USE, you MUST REGISTER THIS DEVICE with your wireless provider and have your provider's consent. Most wireless providers consent to the use of signal boosters. Some providers may not consent to the use of this device on their network. If you are unsure, contact your provider. You MUST operate this device with approved antennas and cables as specified by the manufacturer. Antennas MUST be installed at least 20 cm (8 inches) from any person. You MUST cease operating this device immediately if requested by the FCC or a licensed wireless service provider.

WARNING: E911 location information may not be provided or may be inaccurate for calls served BY USING THIS DEVICE.

15.19 Statement. This device complies with Part 15 of the FCC Rules. Operation is subject to the following two conditions: (1) this device may not cause harmful interference, and (2) this decide must accept any interference received, including interference that may cause undesired operation.

48346 Milmont Drive
Fremont, California 94538
USA
888.365.6283
Fax: 510.996.7250
www.surecall.com

SureCall has made a good faith effort to ensure the accuracy of the information in this document and disclaims the implied warranties of merchantability and fitness for a particular purpose and makes no express warranties, except as may be stated in its written agreement with and for its customers.SureCall shall not be held liable to anyone for any indirect, special or consequential damages due to omissions or errors. The information and specifications in this document are subject to change without notice. © 2014. All Rights Reserved. All trademarks and registered trademarks are the property of their respective owners.

This is a **CONSUMER** device.

BEFORE USE, you MUST REGISTER THIS DEVICE with your wireless provider and have your provider's consent. Most wireless providers consent to the use of signal boosters. Some providers may not consent to the use of this device on their network. If you are unsure, contact your provider.

You **MUST** operate this device with approved antennas and cables as specified by the manufacturer. Antennas **MUST** be installed at least 20 cm (8 inches) from any person. You MUST cease operating this device immediately if requested by the FCC or a licensed wireless service provider.

WARNING. E911 location information may not be provided or may be inaccurate for calls served by using this device.

This device may be operated ONLY in a fixed location for in-building use.

Note: This equipment has been tested and found to comply with the limits for a Class B digital device, pursuant to part 15 of the FCC Rules. These limits are designed to provide reasonable protection against harmful interference in a residential installation. This equipment generates, uses and can radiate radio frequency energy and, if not installed and used in accordance with the instructions, may cause harmful interference to radio communications. However, there is no guarantee that interference will not occur in a particular installation. If this equipment does cause harmful interference to radio or television reception, which can be determined by turning the equipment off and on, the user is encouraged to try to correct the interference by one or more of the following measures:

- Reorient or relocate the receiving antenna.
- Increase the separation between the equipment and receiver.
- Connect the equipment into an outlet on a circuit different from that to which the receiver is connected.
- Consult the dealer or an experienced radio/TV technician for help.

FCC 27.50(d)(4) Statement: Fixed, mobile and portable (hand-held) stations operating in the 1720-1755 MHz band are limited 1 Watt EIRP. Fixed stations operating in this band are limited to a maximum antenna height of 10 meters above ground. Mobile and portable stations operating in this band must employ a means for limiting power to the minimum necessary for successful communications.