REMdevice® Radio Control Equipment

INSTRUCTION MANUAL

T

SERIES RADIOCONTROLS

Transmitter units:

- T3
- T5
- T7

Receiver units:

- RUBYBOX-T7
- ECOBOX-T7
- RXDIN-T7

REMdevice S.r.L.
Via Munari, 72
36055 Nove (VI)
Italy
Tel. +39 0424 500 262
Fax +39 0424 508 631
www.remdevice.com
E-Mail: info@remdevice.com

EN

SUMMARY

- Description 3
- How to use the device correctly and safely 3
- Installation of the radio control device 6
- Arrangement of commands in the transmitter 7
- Receiver unit *(arrangement of components and commands)* 8
- Inspection of the radio control device 16
- Keeping the radio control device in good working order 17
- Replacing the battery 17
- Changing the transmitter 19
- Operating frequency 20
- Conformity 22
- Programming the radio control device *(transmitter and receiver)* 23
- PLUS multi transmitter system 28
- sMEMO multi transmitter system 30
- Diagnostics 31
- Operating principle 32
- Identification of the fuses 33
- Technical Characteristics 33
- Notes and Annex *(if required)* 35
- Guarantee conditions 36

ATTENTION!

The radio remote control system is to be installed, and subsequently used, by suitably authorized and qualified personnel only; incorrect use or installation can result in serious injury or damage to property.
READ this instruction manual CAREFULLY before installing or using the REMdevice remote control and comply with the instructions herein.

DESCRIPTION

The remote control system comprises one or more transmitter units, which can be a T3, T5 or T7 model and the receiver, which can be the RUBYBOX-T7, the ECOBOX-T7 or the RXDIN-T7 model.

HOW TO USE THE DEVICE CORRECTLY AND SAFELY

The remote control has been designed strictly for use by qualified operators only, who are required to first read the instructions on how to use the device and comply with the safety standards prescribed by the law in the area where work is carried out.
The device's installation on heavy machinery must be carried out by qualified technical personnel who are familiar with the functional features of both the remote control and the machinery and are authorized to fill out the form attesting to its correct installation.
REMdevice shall not be liable for bodily injury or damage to property as a result of:

- misuse or inexpert use of the device
- incorrect wiring or electrical connections
- tampering
- changes to the remote control's design features
- replacement of parts with non-original spare parts
- failure to perform maintenance
- failure to replace worn, faulty or defective parts
- the device being used with its intrinsic safety features disabled or its original features altered in any way.

Warning: This device works using radio signals. It can operate the machinery it is connected to even if barriers are blocking its line of sight, such as brick walls, metal or wooden panels, other machinery, equipment, buildings and vehicles. It is important the operator exercise the utmost care when activating the controls in order to avoid uncontrolled movements.

Activating the remote control

- Stand with the transmitter unit so that there is a perfectly clear full line of sight between it and the machinery
- do not linger under overhead loads
- do not operate from an unstable position
- take proper note of the control's identification labels located next to each button or actuator
- do not press any button or actuator if you do not know exactly what it does

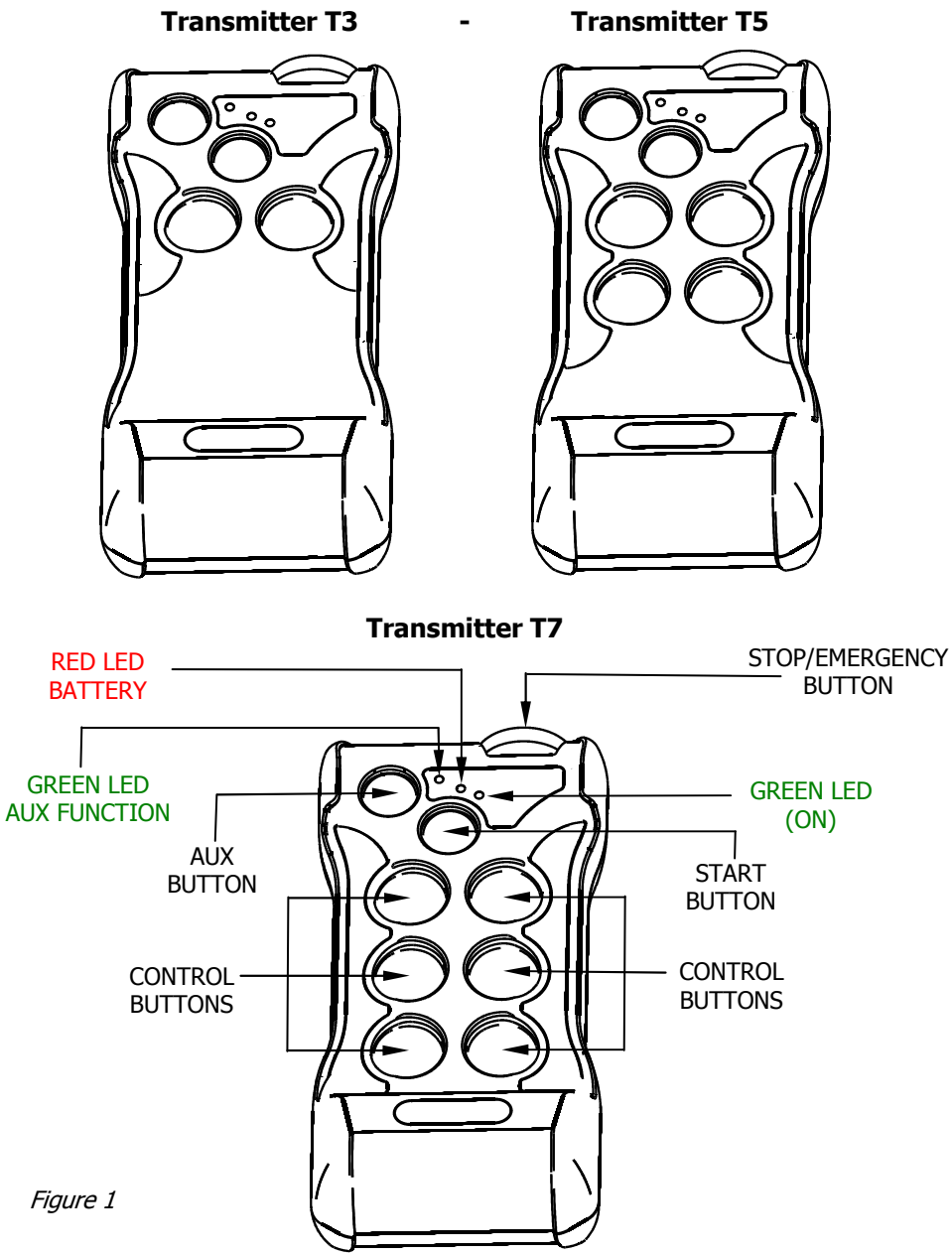

Figure 1

Activation

1- Turn and release the Stop / Emergency button (Figure 1): power is supplied to the transmitter.
2- Press the **START** button. Activation is indicated by the blinking of the green LED (ON) at intervals of about 1 second. If the transmitter gives a Beep accompanied by the lighting of the red LED, check to make sure that other buttons have not been pressed. If the receiver is ready to use, you should hear the sound of the obligatory acoustic warning installed on the operating machine.

Use of the radio control device

Press the control buttons for the desired function, taking care as they may be of the type with a sequential double click: by increasing the pressure on the button, a second contact is made that is normally assigned to increasing the speed of a machine movement.

If any kind of difficulty occurs in controlling the operating machine (for mechanical or electrical reasons, or at any rate independent of the intentions of the operator), immediately press the red Stop/Emergency mushroom button.

The radio control device has an automatic interlock on the controls of opposite or incompatible functions: for example, Ups/Down, Left/Right, Forward/Back.
Periodically check the efficiency of the red Stop/Emergency mushroom button.

Switching off

Press the red Stop/Emergency mushroom button.
At the end of the manoeuvres, and before putting the transmitter away, always switch it off.
Do not leave the transmitter unattended when switched on and unlocked.
Put the transmitter away in a safe place, inaccessible to unauthorised persons.
Never entrust the transmitter to unskilled personnel.

Self cut-out

When this function is activated (factory setting), the transmitter switches off automatically after 3 minutes of inactivity. It is restarted when the START button is pressed.
In self cut-out condition, the equipment still uses a small amount of energy: to avoid this unnecessary consumption, press the red Stop/Emergency mushroom button.

Locking and Unlocking the keypad

It is possible to block the use of the transmitter as follows:

- supply power to the transmitter by turning and releasing the red Stop/Emergency mushroom button
- press the buttons **1**, **2**, **7** together and simultaneously the Start button **S**, then release.

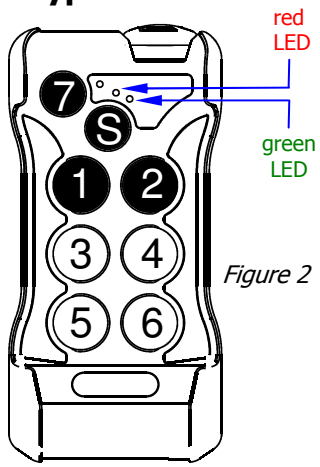

Figure 2

If you try to activate the transmitter after this operation, the red LED (BATTERY) and the green one (ON) blink alternately and the transmitter emits an acoustic warning.

To unlock the use of the transmitter, repeat the sequence.

Battery Life

The battery is inside the transmitter. When it is run down, this is indicated on the transmitter by the regular blinking of the red LED (BATTERY). After the first signal, the radio control device is able to work perfectly for over 30 hours consecutively.
The working life of the transmitter with a new and fully charged battery depends on the radio power selected.

INSTALLATION OF THE RADIO CONTROL DEVICE

REMdevice is at the disposal of installation technicians to supply useful information that will ensure the correct installation and commissioning of the radio control device.

The **installation** of the radio control device on operating machines must be carried out in compliance with the Machines Directive and the harmonised regulations. Installation must be performed by qualified technical personnel, who know the technical characteristics of the radio control device and of the operating machine, and who are enabled to compile the document certifying correct installation.
The installer is responsible for any damage to persons or things resulting from receiver wiring errors, from failure to observe the safety regulations, from the use of unsuitable material for installing the receiver, and from non inspection or incomplete inspection of the radio-controlled machine.

The presence of **obstacles** significantly reduces the working range of the radio remote control. Install the antenna (or the receiver if the antenna is internal) on the outside of metal structures and in such a way as to be in direct view from the position in which the operator is in control of the machine.

The frequency band set varies according to the regulations in force in the country where the product is intended.

In order to be able to operate, the radio remote control and machine **must comply with the laws and regulations in force** in the country where it is used.

REMdevice S.r.L **can not be held responsible** if radio controls are set at prohibited frequencies in the country of use.

ARRANGEMENT OF COMMANDS IN THE TRANSMITTER

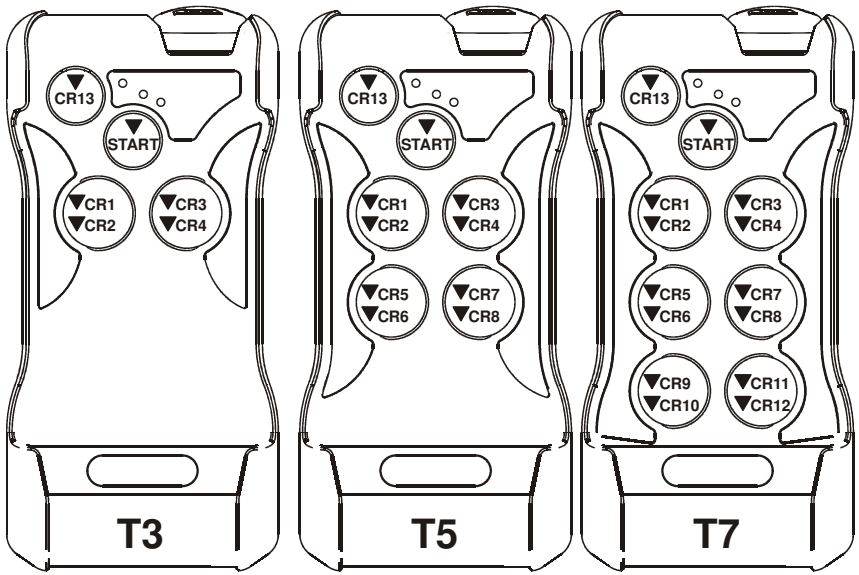

Figure 3

See also the paragraph:
CHANGE OF RECEIVER FUNCTIONS at page 27

RECEIVER UNIT

Three receiver models are available:

- **ECOBOX-T7** watertight receiver, 7 function, for outdoor use
- **RUBYBOX-T7** watertight receiver, complete, for outdoor use
- **RXDIN-T7** DIN receiver for indoor use with external aerial

The receiver must be placed in a position where it is easily accessible for the maintenance and repair personnel.

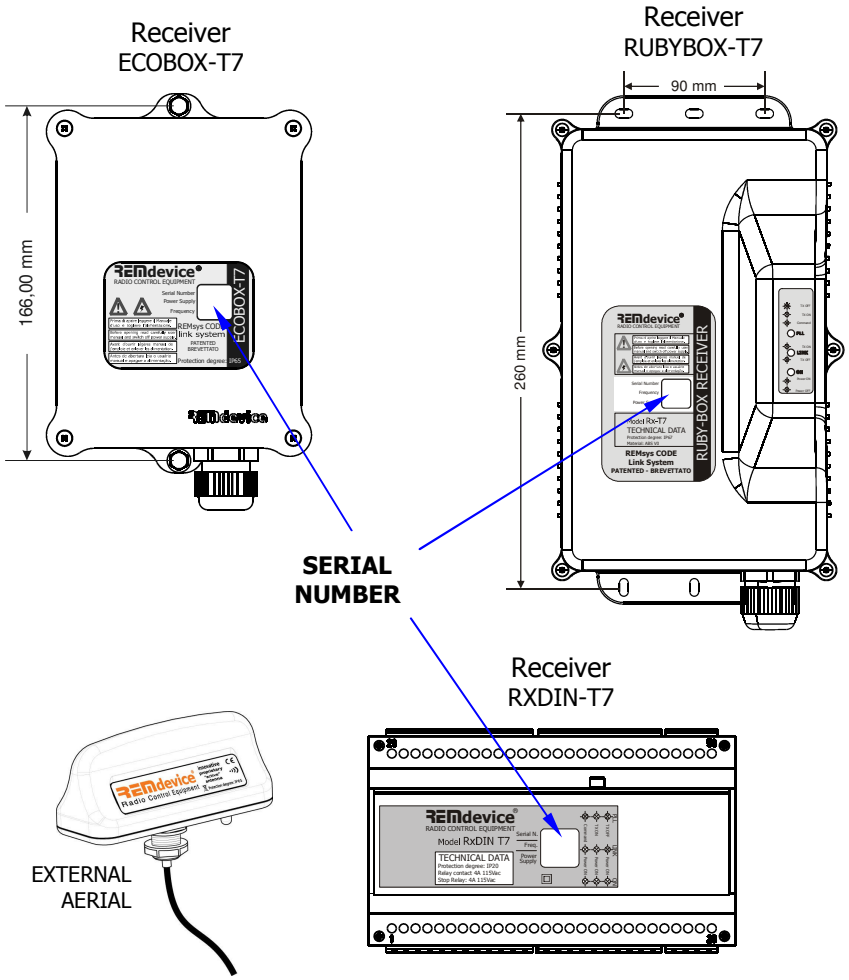

Figure 4

The RUBYBOX-T7 and ECOBOX-T7 receivers must not be positioned inside screened metal structures (boxes, cupboards, trellises, tubes, grids, etc.), so as not to jeopardise the reception of the radio signal.

They must be installed with the entry of the multicore cable **facing down**, so as to avoid water infiltrations through the cable clamp. Never make a hole in the box.

To fix them, use the assembly kit supplied. Measurements for drilling the holes are indicated in Figure 4. Avoid precarious fixing systems.

For correct and safe wiring of the receiver, use a multicore cable and plug of the same type as those used for the wired pushbutton panel supplied with the machine.
Use caps to **terminate the leads** to be tightened to the receiver terminals and check the fastening accurately.

The characteristics of the receiver **relay contacts** are given in the paragraph TECHNICAL CHARACTERISTICS on page 31. The rated current can also be supported in DC13 (inductive load) by connecting a diode in parallel to the load.

For use in the AC15 category it is advisable to connect in parallel to the load of an appropriate RC damping circuit of contact opening. (Ref. IEC / EN60947).

The RXDIN-T7 receiver is suitable for installation inside the electrical cabinet on the DIN rail and is equipped with an external antenna to be positioned outside the frame itself, create a proper 16 mm diameter fixing hole.

The simultaneous control of an operating machine with the radio control device and the wired pushbutton panel is NOT allowed.
Pay particular attention to the connection of the STOP/EMERGENCY circuit, following and respecting the machine's original wiring diagram.

Supplying power to the Receiver

Check that there is a suitable isolating device on the machine. Use a voltmeter to check that there is a suitable voltage on the machine's electric panel to supply the receiver. These feeding voltage values are given in the paragraph TECHNICAL CHARACTERISTICS and printed next to the connecting terminals, inside the receiver.

The phase and neutral or positive and negative polarities are indifferent.

The presence of voltage on the receiver is indicated by the green LED ON with a fixed light.

ARRANGEMENT OF COMMANDS IN THE RECEIVER

ECOBOX-T7 Receiver

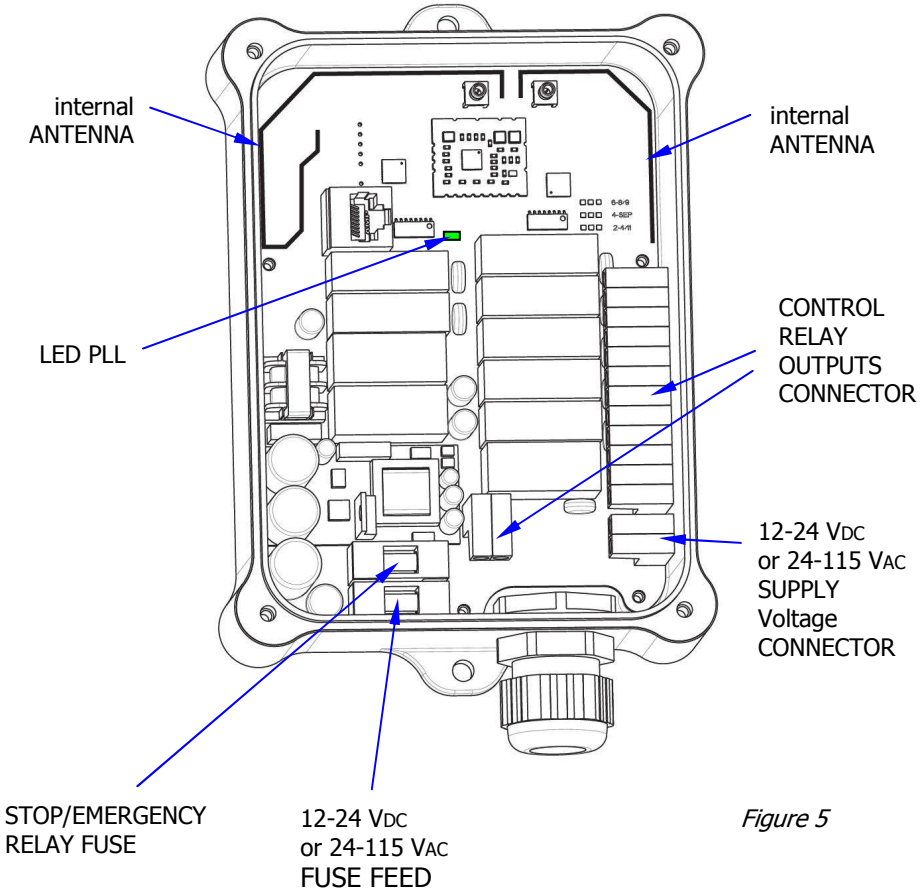

Figure 5

Arrangement of controls in the receiver ECOBOX-T7

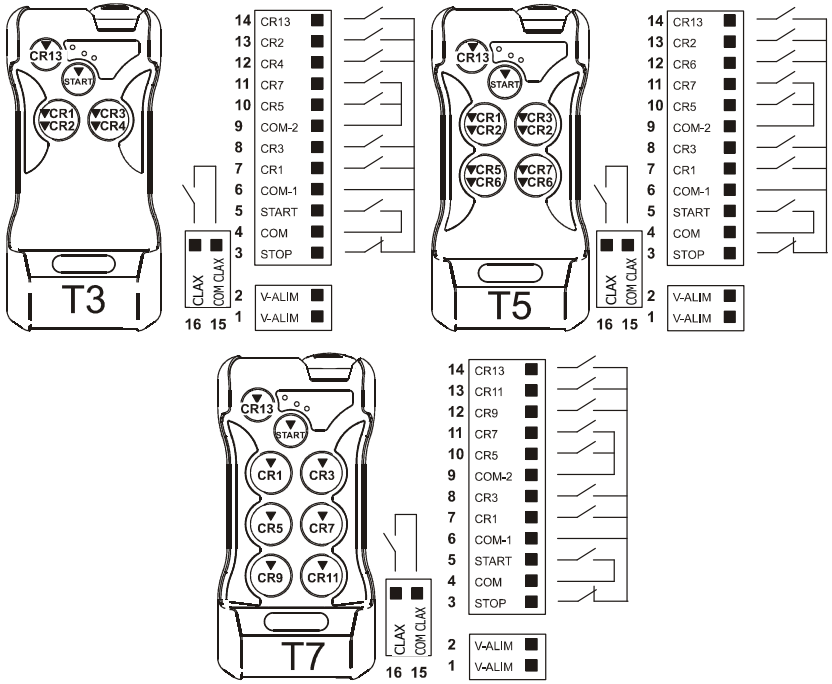

Figure 6

V-ALIM = Receiver power supply
STOP = Stop/Emergency contact (NC with transmitter active)
START = Start Contact (NA)
CLAX = Horn Contact (NA, it closes with the START command)
CR1-13 = Control relay contacts
COM, COM-1, COM-2 = Common contact supply

NA = Normally Open
NC = Normally Closed

RUBYBOX-T7 Receiver

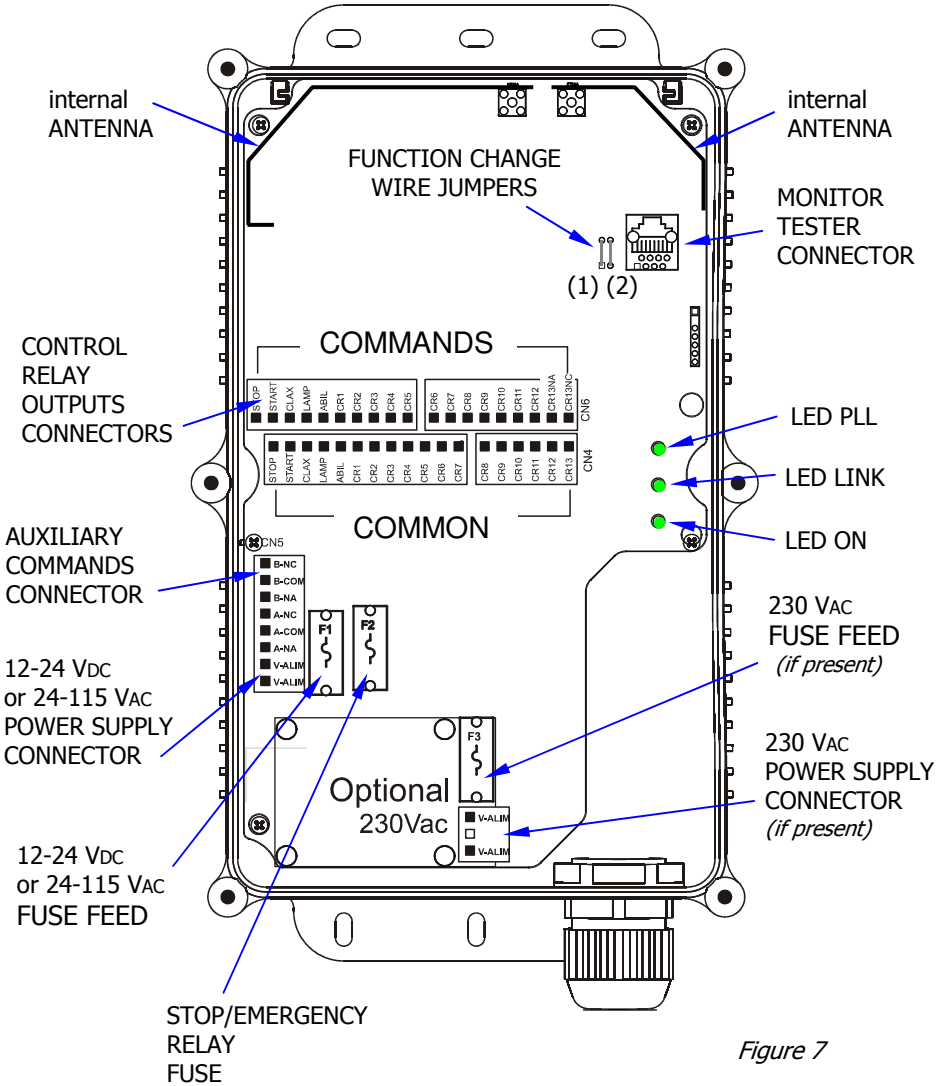

Figure 7

Arrangement of controls in the receiver RUBYBOX-T7

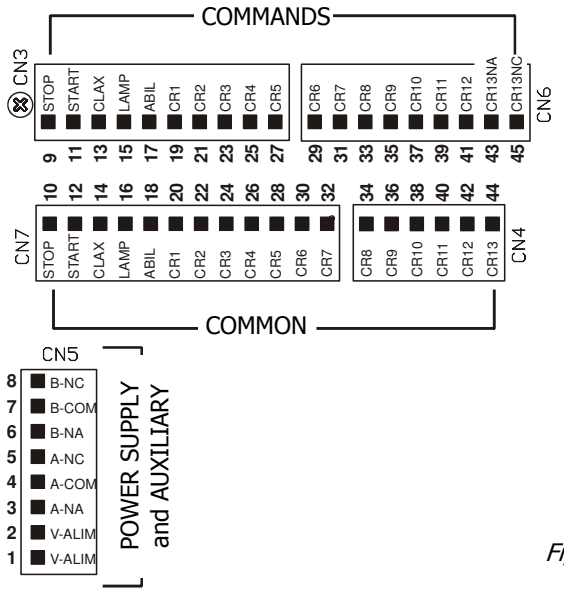

Figure 8

V-ALIM = Receiver power supply

STOP = Stop/Emergency Contact (NC with transmitter active)
START = Start Contact (NA)
CLAX = Horn Contact (NA, it closes with the START command)
LAMP = Contact for flashing light (NC with transmitter active)
ABIL = Enabling Contact (NA, it closes with any control button)

CR1-12 = Control relay contacts
CR13, A, B = Relays contacts assigned to the auxiliary button
NA = Normally Open
NC = Normally Closed

RXDIN-T7 Receiver

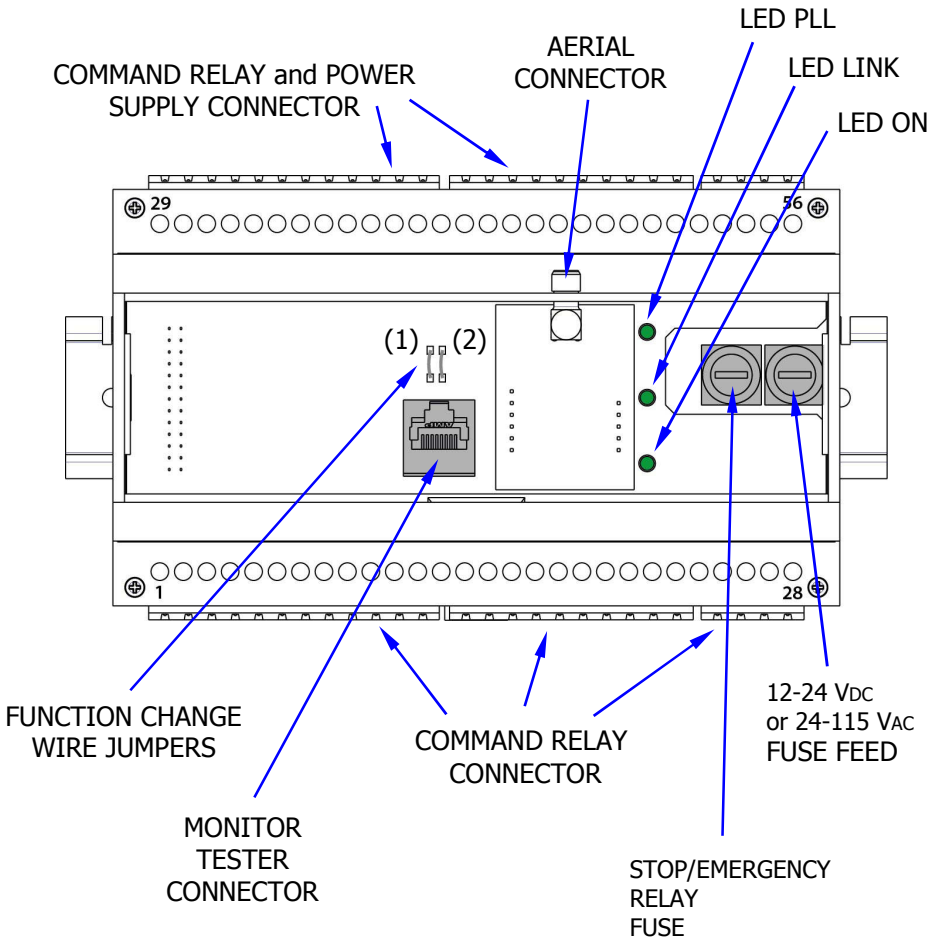

Figure 9

Arrangement of controls in the receiver RXDIN-T7

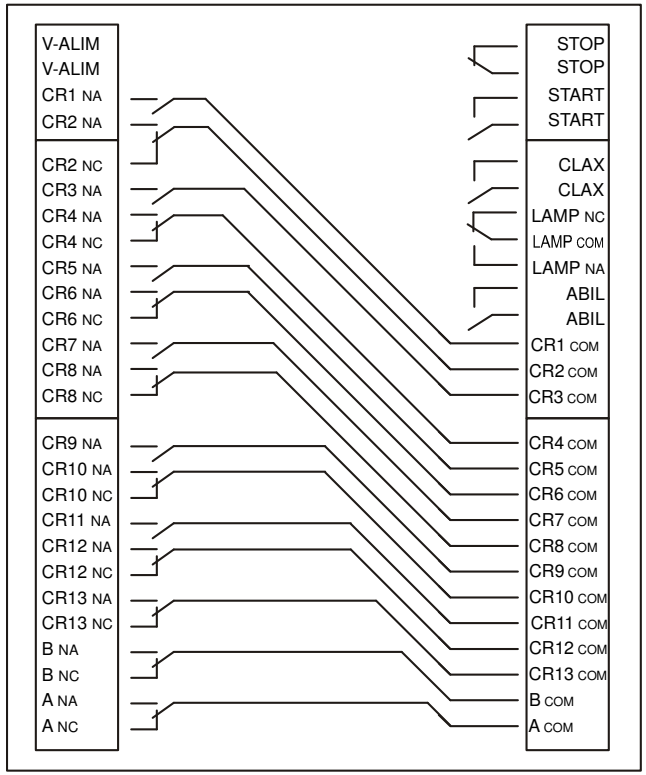

Figure 10

V-ALIM = Receiver power supply

STOP = Stop/Emergency Contact (NC with transmitter active)
START = Start Contact (NA)
CLAX = Horn Contact (NA, it closes with the START command)
LAMP = Contact for flashing light (NC with transmitter active)
ABIL = Enabling Contact (NA, it closes with any control button)

CR1-12 = Control relay contacts
CR13, A, B = Relays contacts assigned to the auxiliary button
NA = Normally Open
NC = Normally Closed
COM = Common contact supply

INSPECTION OF THE RADIO CONTROL DEVICE

With the operating machine turned off, insert the plug of the multicore cable of the receiver in place of that of the wired pushbutton panel and secure it with the fastening hooks.
Check that the connecting cable between the receiver and the machine does not hinder or get caught in the mechanical parts during movement of the machine.

Switch on the operating machine, remaining at a safe distance, that is outside its radius of action, as an error in wiring could cause it to start up accidentally.

- In the receiver, check that the green LED ON is steady lit (see Fig. 7, 9) indicating that it is powered.
- In the receiver, check that the green LED PLL is blinking (see Fig. 5, 7, 9) indicating that waiting status of the radio signal.
- Switch on the transmitter and check in the receiver that the green LED LINK has a fixed light (see Fig. 7, 9) indicating the correct communication between transmitter and receiver.

Checking the efficiency of the Stop/Emergency button and of the control buttons

Press the Stop/Emergency button (see Fig. 1) and check in the receiver that the green LED LINK switches off (see Fig. 7, 9) indicating that the radio control has been deactivated.
To continue the inspection procedure, **reset** the Stop/Emergency button, activate the transmitter with the START button and then press a control button to make the machine perform the assigned movement: now while it is moving, press the Stop/Emergency button to check that the machine stops immediately.
After having reactivated the transmitter, press one button at a time and check that the machine performs the respective movement.
Walk away from the receiver and, still checking the machine movements, give the various commands in the different zones of the work area, to ensure that it is fully covered by the radio signal.

At the end of inspection, clearly fill in the wiring diagram of the receiver and sign the declaration of correct installation.

The **serial number** of the radio control device to be given on the documentation is indicated on the Receiver (see Fig. 4) and is not on the Transmitter.

KEEPING THE RADIO CONTROL DEVICE IN GOOD WORKING ORDER

Clean the transmitter periodically to prevent the accumulation of dirt over time which is difficult to remove and may cover the graphic symbols on the control buttons.

If the symbols become illegible, or the adhesive labels come off, it is recommended to apply new labels available from REMdevice.
Avoid using solvents to clean the device.
The transmitter must not be immersed in water.
Check the perfect seal of the transmitter gasket the absence of cracks on the shells and the integrity of the rubber of the buttons.
Any liquid infiltrations may severely damage or jeopardise the regular operation of the electric circuits inside the transmitter.

Special maintenance and repairs must be carried out only by specialised personnel authorised by REMdevice.

Perform the controls as described in the chapter "Checking the efficiency of the Stop/Emergency button and of the control buttons".

Never use the appliance if the Stop/Emergency button is not efficient.

The correct operation of the mushroom button ensures the immediate stop of all the functions of the operating machine and the deactivation of the radio control device. The breakage, even partial, or the imperfect efficiency of this button will endanger the safety of the radio control device, making it no longer compliant with the regulations.

Entrust reject material or the product to be scrapped to the authorised disposal centres in your territory.

REPLACING THE BATTERY

The battery is inside the transmitter: to replace it, it is necessary to open the unit. This operation must be carried out in a clean place, with no humidity and only by specialized personnel, authorized by REMdevice.

- Remove the 8 screws and open the transmitter lid
- Remove the connector and replace the battery with a new one

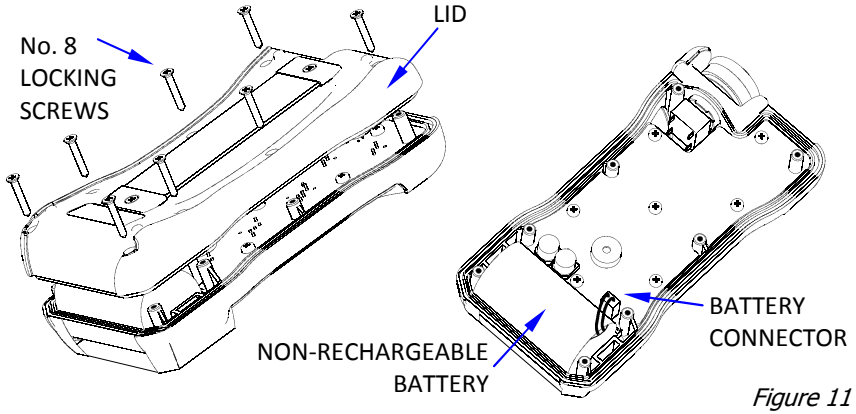

Figure 11

- Use the sticker applied to the battery body peeling off the protective film and removing the residues of the old adhesive.
- Before closing the keypad, be careful in folding the red and black wires back against the battery and prevent them from being crushed while closing.

Strong shocks to the transmitter and its battery can permanently damage the battery.

Risk of fire, explosion and serious burns.
The lithium battery is not rechargeable: do not dismantle, recharge, apply voltage, short-circuit, expose to high temperatures or flames, do not burn or immerse in water.

If the unit is not used for over 3 months, proceed to "awake" the battery by repeating the transmitter's START procedure until stabilized, that is until the transmitter is stabilized and remains ON without showing any error of low battery. The operation normally lasts a few minutes.

The life expectancy of the battery can be reduced if subjected to extreme temperatures. Batteries must be stored in cool, clean and ventilated rooms with a temperature of between 10°C and 30°C.
If batteries are stored for over 8 years they might experience a loss of performance.

CHANGING THE TRANSMITTER

In the event of malfunction, breakage or loss of the transmitter, it is possible to replace it with a new one.

The programming of the code involves only the transmitter, while the receiver is combined and tuned automatically, thanks to the exclusive new patented **"REMSYS CODE" System**. For this reason the **serial number** of the radio control device is marked only on the Receiver. The replacement of the transmitter does not involve any operation of modifying or labelling the transmitter itself.

- Disconnect the power from the receiver: if it is powered by the electric panel of the machine, turn off the main switch.
- Release the red Stop/Emergency mushroom button of the transmitter.
- Press the buttons **2** and **7** together and simultaneously the START button **S**, and release.
  The green LED ON starts to blink very rapidly (flickering).
- Switch on the power to the receiver.
- When the transmitter recognises the receiver, the green LED ON lights with a fixed light.
- Switch off the transmitter by pressing the red Stop/Emergency mushroom button.
- Wait about 10 seconds, after which the new transmitter is ready for use.

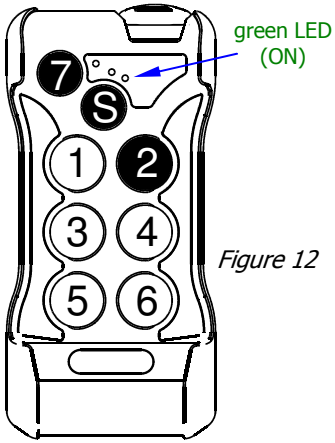

Figure 12

If the radio control device does not work, repeat the entire operation.

During this procedure the system will automatically find an **interference-free** radio channel.

To restart the machinery press the **S** START button and keep it pressed until the machinery starts up. This operation may take a few seconds.

OPERATING FREQUENCY

In order to operate, the radio control system with the remote-controlled machine, must **respect the laws and the regulations** in the country where it is used.

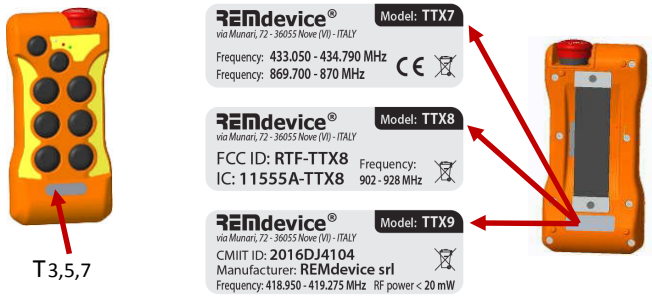

Figure 13

REMdevice S.r.L **can not be held responsible** if the radio controls are set to prohibited frequencies in the country of use.

Models: **TTX7**

Band 433,050 – 434,790 MHz RF power < 1 mW (e.r.p.)					
CH**1** 433,0625	CH**2** 433,0875	CH**3** 433,1125	CH**4** 433,1375	CH**5** 433,1625	CH**6** 433,1875
CH**7** 433,2125	CH**8** 433,2375	CH**9** 433,2625	CH**10** 433,2875	CH**11** 433,3125	CH**12** 433,3375
CH**13** 433,3625	CH**14** 433,3875	CH**15** 433,4125	CH**16** 433,4375	CH**17** 433,4625	CH**18** 433,4875
CH**19** 433,5125	CH**20** 433,5375	CH**21** 433,5625	CH**22** 433,5875	CH**23** 433,6125	CH**24** 433,6375
CH**26** 433,6875	CH**27** 433,7125	CH**28** 433,7375	CH**29** 433,7625	CH**25** 433,6625	CH**30** 433,7875
Band 434,040 – 434,790 MHz RF power < 10 mW (e.r.p.)					
CH**31** 434,0625	CH**32** 434,0875	CH**33** 434,1125	CH**34** 434,1375	CH**35** 434,1625	CH**36** 434,1875
CH**37** 434,2125	CH**38** 434,2375	CH**39** 434,2625	CH**40** 434,2875	CH**41** 434,3125	CH**42** 434,3375
CH**43** 434,3625	CH**44** 434,3875	CH**45** 434,4125	CH**46** 434,4375	CH**47** 434,4625	CH**48** 434,4875
CH**49** 434,5125	CH**50** 434,5375	CH**51** 434,5625	CH**52** 434,5875	CH**53** 434,6125	CH**54** 434,6375
CH**55** 434,6625	CH**56** 434,6875	CH**57** 434,7125	CH**58** 434,7375	CH**59** 434,7625	CH**60** 434,7875

Models: **TTX7** *(...continues)*

Band 869,700 – 870,000 MHz RF power < 5 mW (e.r.p.)					
CH**61** *(1)* 869,7125	CH**62** *(2)* 869,7375	CH**63** *(3)* 869,7625	CH**64** *(4)* 869,7875	CH**65** *(5)* 869,8125	CH**66** *(6)* 869,8375
CH**67** *(7)* 869,8625	CH**68** *(8)* 869,8875	CH**69** *(9)* 869,9125	CH**70** *(10)* 869,9375	CH**71** *(11)* 869,9625	CH**72** *(12)* 869,9875

Note: The receiving unit sequentially uses the 72 available channels
The transmitter unit displays the channel in use 1-60 or *1-12* according to the set band

Models: **TTX8**

Band 902 – 928 MHz RF power meets FCC and IC requirements					
CH**1** 902,500	CH**2** 903,000	CH**3** 903,500	CH**4** 904,000	CH**5** 904,500	CH**6** 905,000
CH**7** 905,500	CH**8** 906,000	CH**9** 906,500	CH**10** 907,000	CH**11** 907,500	CH**12** 908,000
CH**13** 908,500	CH**14** 909,000	CH**15** 909,500	CH**16** 910,000	CH**17** 910,500	CH**18** 911,000
CH**19** 911,500	CH**20** 912,000	CH**21** 912,500	CH**22** 913,000	CH**23** 913,500	CH**24** 914,000
CH**25** 914,500	CH**26** 915,000	CH**27** 915,500	CH**28** 916,000	CH**29** 916,500	CH**30** 917,000
CH**31** 917,500	CH**32** 918,000	CH**33** 918,500	CH**34** 919,000	CH**35** 919,500	CH**36** 920,000
CH**37** 920,500	CH**38** 921,000	CH**39** 921,500	CH**40** 922,000	CH**41** 922,500	CH**42** 923,000
CH**43** 923,500	CH**44** 924,000	CH**45** 924,500	CH**46** 925,000	CH**47** 925,500	CH**48** 926,000
CH**49** 926,500	CH**50** 927,000				

Models: **TTX9**

Band 418,950 – 419,275 MHz RF power < 20 mW (e.r.p.)					
CH**1** 418,950	CH**2** 418,975	CH**3** 419,000	CH**4** 419,025	CH**5** 419,050	CH**6** 419,075
CH**7** 419,100	CH**8** 419,125	CH**9** 419,150	CH**10** 419,175	CH**11** 419,200	

Conformity

All the **T** series radio controls operating in the frequency band:
433.050 - 434.790 MHz and/or 869.700 - 870 MHz
are in conformity with the Radio Equipment Directive 2014/53/EU (RED).
The EU Declaration of Conformity (DoC) it's available for download at the Internet address: www.remdevice.com/doc

All the **T** series radio controls operating in the frequency band:
902 - 928 MHz
comply with the essential requirements of the following standards:

- FCC (Federal Communication Commission) Part 15
- IC (Industry Canada) RSS-102

Transmitter unit **T** 3,5,7	*Model* **TTX8**	FCC ID = RTF-TTX8 IC number = 11555A- TTX8

Federal Communications Commission (FCC)

This device complies with part 15 of the FCC Rules.
Operation is subject to the following two conditions:
(1) this device may not cause harmful interference, and
(2) this device must accept any interference received, including interference that may cause undesired operation.
Any changes or modifications not expressly approved by the party responsible for compliance could void the user's authority to operate the equipment.

Industry Canada (IC)

This device complies with RSS-210 of the Industry Canada Rules.
Operation is subject to the following two conditions:
(1) this device may not cause harmful interference, and
(2) this device must accept any interference received, including interference that may cause undesired operation.

Place the antenna of the receiving unit in a position that ensures a minimum separation distance of 20 cm with all the people that can be in the working area.

PROGRAMMING THE RADIO CONTROL DEVICE

Changing the frequency

The operation of changing frequency is carried out only on the transmitter, the receiver is tuned automatically.

- Release the red Stop/Emergency mushroom button.
- Press the buttons **1** and **7** together and simultaneously the Start button **S**, and release.
- The set channel is indicated first with the tens (number of pulses of the red LED), then with the units (number of pulses of the green LED).

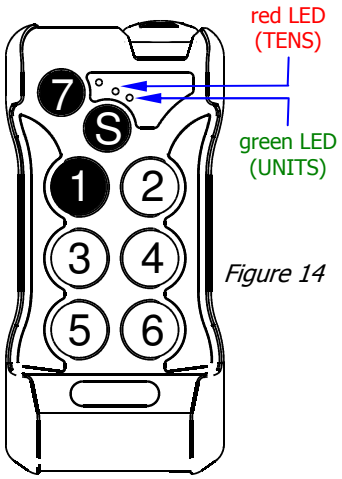

Figure 14

Example: the channel 23 is displayed with two pulses of the red LED and three pulses of the green LED.

The frequency values are given in the tables on pages 20 and 21.

At the end of this sequence the transmitter has entered **frequency changing** mode:

- Each time button **1** is pressed, the **CHANNEL –1** function is obtained (units)
- Each time button **2** is pressed, the **CHANNEL +1** function is obtained (units)
- Each time button **3** is pressed, the **CHANNEL –10** function is obtained (tens)
- Each time button **4** is pressed, the **CHANNEL +10** function is obtained (tens)

The set channel is indicated first with the tens (number of pulses of the red LED), then with the units (number of pulses of the green LED).

- Once the desired frequency value has been set, press the red Stop/Emergency mushroom button and wait at least 3 seconds, then release it.
- Press the START button **S** for a few seconds and hold it down until the machine starts.

follow

Warning: the frequency changing operation must be carried out with the transmitter programmed in average or maximum power.
Warning: this operation isn't possible if the "LOW POWER START-UP" function has been activated in the transmitter.
See the following chapter "Programming the transmitter functions".

Setting the frequency band (models **TTX7** only)

Repeat the first 2 steps of the previous paragraph, then

- press and hold only the **button 7**, the green and the red LEDs will light up together accompanied by a short melody (buzzer sound)
- then only the red LED or the green LED will blink
  - green LED blink = 433-434 MHz band
  - red LED blink = 870 MHz band
- release the **button 7** at this point

To change this setting, repeat the sequence from the beginning.

The frequency band to be set varies depending on the laws and standards in the country where the product is due to be used.

Programming the transmitter functions

It is possible to program the following functions only using a transmitter unit **T5** or **T7**:
1 - Self cut-out
2 - Radio frequency output power
3 - Enabling of **AUXILIARY 7** button (relay CR13)
4 - Operation of **AUXILIARY 7** button (relay CR13 or A-B)
5 - Low power start-up (programmable only with **T7** transmitter)

To enter **function programming** mode:
- Supply power to the transmitter by releasing the red Stop/Emergency mushroom button.
- Press the buttons **3, 4, 7** together and simultaneously the Start button **S**, then release.

After this sequence the green LED blinks rapidly.
Programme the functions following the table given below.
Each time the button chosen (1, 2, 3, 4, 5) is pressed the associated function changes status as displayed by the red LED.
To quit programming mode, press the red Stop/Emergency mushroom button.

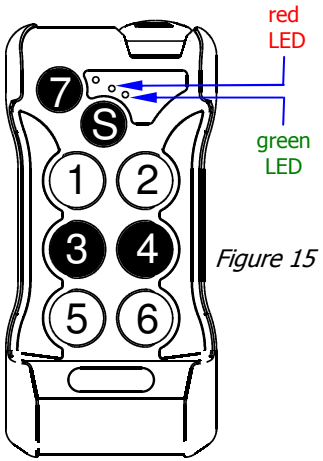

Figure 15

Button to press programmed function	red LED Off	red LED On	red LED Blinking
Button 1 SELF CUT-OUT	**EXCLUDED**	**ACTIVE** after **3** minutes of inactivity	**ACTIVE** after **30** minutes of inactivity
Button 2 RADIO POWER	**MINIMUM**	**AVERAGE** *(factory setting)*	**MAXIMUM**
Button 3 AUXILIARY BUTTON	Button 7 **EXCLUDED**	Button 7 **ACTIVE**	Button 7 **ACTIVE** **Relay A – Relay A+ B with CR1 or CR3**
Button 4 AUXILIARY BUTTON	Button 7 ACTIVE **Relay CR13 Pulse**	Button 7 ACTIVE **Relay CR13 Step by step**	Button 7 ACTIVE **Relay A – Relay B – Relay A+B**
Button 5 LOW POWER START-UP	**EXCLUDED**	**ACTIVE**	Not used

Programming the transmitter functions II

It is possible to program the following functions only using a transmitter unit **T5** or **T7**:
1 – Only one command at a time
2 – Not used

To enter **function programming II** mode
- Supply power to the transmitter by releasing the red Stop/Emergency mushroom button.
- Press the buttons **3, 2, 7** together and simultaneously the Start button **S**, then release.

After this sequence the green LED blinks rapidly.
Programme the functions following the table given below.
Each time the button chosen (1, 2) is pressed the associated function changes status as displayed by the red LED.
To quit programming mode, press the red Stop/Emergency mushroom button.

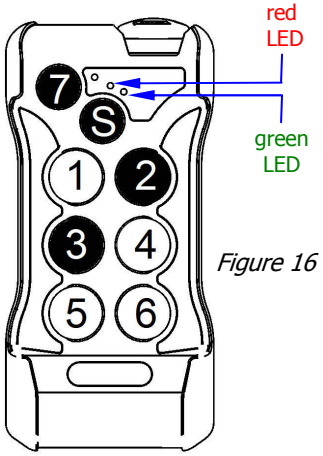

Figure 16

Button to press programmed function II	red LED Off	red LED On	red LED Blinking
Button 1 ONE command	**EXCLUDED** *(factory setting)*	**ACTIVE** Only one command at a time	Not used
Button 2	Not used	Not used	Not used

CHANGE OF RECEIVER FUNCTIONS

Operate on the "FUNCTION CHANGE" wire jumpers inside the receiver.

Wire Jumper		RECEIVER OPERATION
1	Open	Frequency change blocked. The last frequency set becomes the working frequency and can no longer be changed. After this operation it is necessary to perform the procedure described in the chapter "Changing the transmitter" (page 19).
1	Closed	Frequency change released.
2	Open	Button **7** performs the function of 3rd and 4th speed (self-retaining relays) for the first control activated. When the button for the opposite control is pressed, the 3rd and 4th speed self-retaining relays are disconnected step by step. If two or more controls are activated at the same time, the function of the button T7 has no effect.
2	Closed	The second click of each button activates a relay of its own.

BUTTONS-RELAYS CORRESPONDENCE
(Receiver)

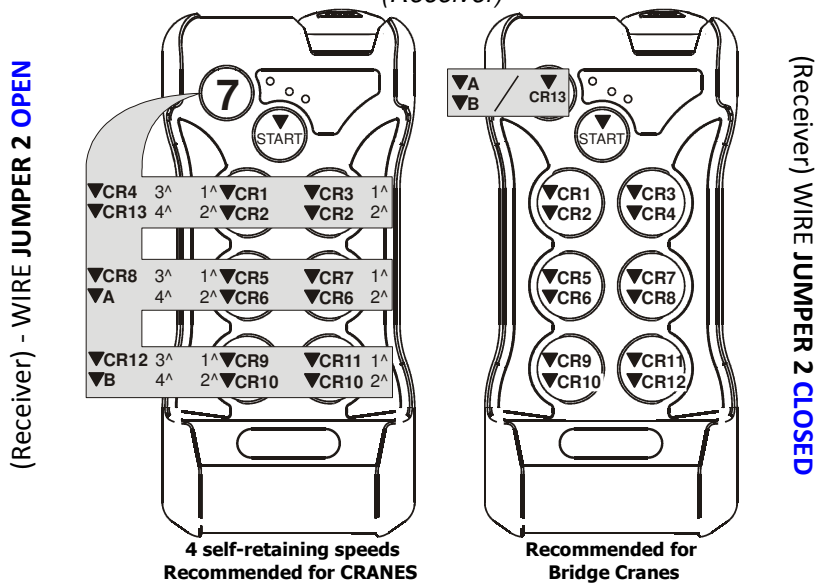

4 self-retaining speeds
Recommended for CRANES

Recommended for
Bridge Cranes

PLUS multi transmitter system

The system consists of several transmitting units and one receiving unit connected to the machine.

Instructions to transfer control of the hoisting machine from one transmitter unit to the other

There are two ways to perform the function:

- Turn off the machine (thus removing the power to the receiver). Turn on the machine that supplies the receiver. After this operation the machine is ready to be controlled by the first transmitter unit of the system that activates the START command.
- Carry out the **RELEASE** procedure (described below)

RELEASE procedure

Only the transmitter unit which is controlling the machine can perform the function of RELEASE.

Procedure:

- Rotate to release the Stop / Emergency button: the transmitter is powered.
- Press the **S** (START) and buttons **7** together. The function will be signaled by a flashing green LED (ON) and a beeping sound. After this operation the machine will beep twice and is ready to be driven by the first transmitter unit of the system that activates the START command.

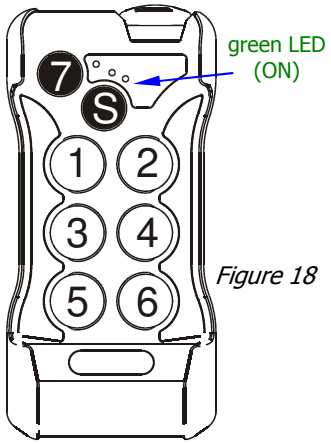

Figure 18

Activation

1- Turn and release the Stop / Emergency button (Figure 1): power is supplied to the transmitter.

2- Press the **S** (START) button. Activation is indicated by the blinking of the green LED (ON) at intervals of about 1 second. If the transmitter gives a Beep accompanied by the lighting of the red LED, check to make sure that other buttons have not been pressed. If the receiver is ready to use, you should hear the sound of the obligatory acoustic warning installed on the operating machine.

ADDITION OF A TRANSMITTING UNIT

Is possible to add a transmitter to the **PLUS or sMEMO** system with the new exclusive patented "**REMSYS CODE**" technology. For this reason the serial number of the transmitter is shown only on the receiver unit.

- Remove power to the receiver: if it is powered through the machine electrical panel switch off the main switch .
- Unlock the Transmitter's red mushroom Stop / Emergency button.
- Press the buttons **2** and **7** together, then at the same time the **S** button to START and release all of them.
- The green LED (ON) flashes quickly.
- Turn on the power to the receiver.
- When the receiver recognizes the transmitter the green LED (ON) will light on steady.
- Turn off the transmitter by pressing the red Stop / Emergency button.
- Wait about 10 seconds then the new transmitter is ready for use.

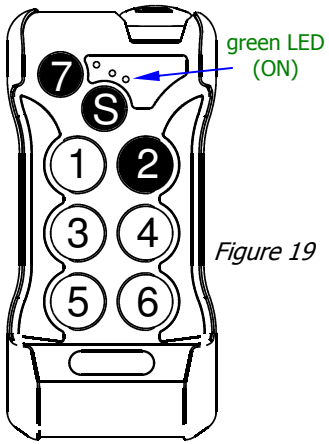

Figure 19

If the radio remote control does not work repeat the whole operation.

During this procedure, the system will automatically switch to a radio channel **free from interference**.

To start the machine again you must press the **S** button to START and hold it until the machine starts.
The process takes less than a minute.

The PLUS system complies with:
EN 60204-32 (Safety of Machinery)

SYSTEM PLUS does not allow simultaneous use of transmitters!

sMEMO multi transmitter system

The system consists of several transmitting units and one receiving unit connected to the machine.

Instructions to transfer control of the hoisting machine from one transmitter unit to the other

To perform this function, simply switch off the transmitter unit that is controlling the machine. The first unit that belongs* to the system that activates the START command takes control of the machine, excluding all the others.

**) which has been previously paired to the receiving unit by following the instructions in the paragraph "ADDITION OF A TRANSMITTING UNIT" on page 29*

The **PLUS** and **sMEMO** options must be requested at the order of the radio control:
These options can NOT be added later.

ADDITION OF A TRANSMITTING UNIT:

it is achieved as for the PLUS system, see on page 29

DIAGNOSTICS

If the radio-controlled machine is not working correctly, it is necessary to understand whether the problem depends on the machine or on the radio control device.
For thus purpose, connect the wired control and check that the machine works correctly without the radio control device.
If the machine works correctly without the radio control device, it is necessary to check the operation of the radio control device following the diagnostic procedure described below.

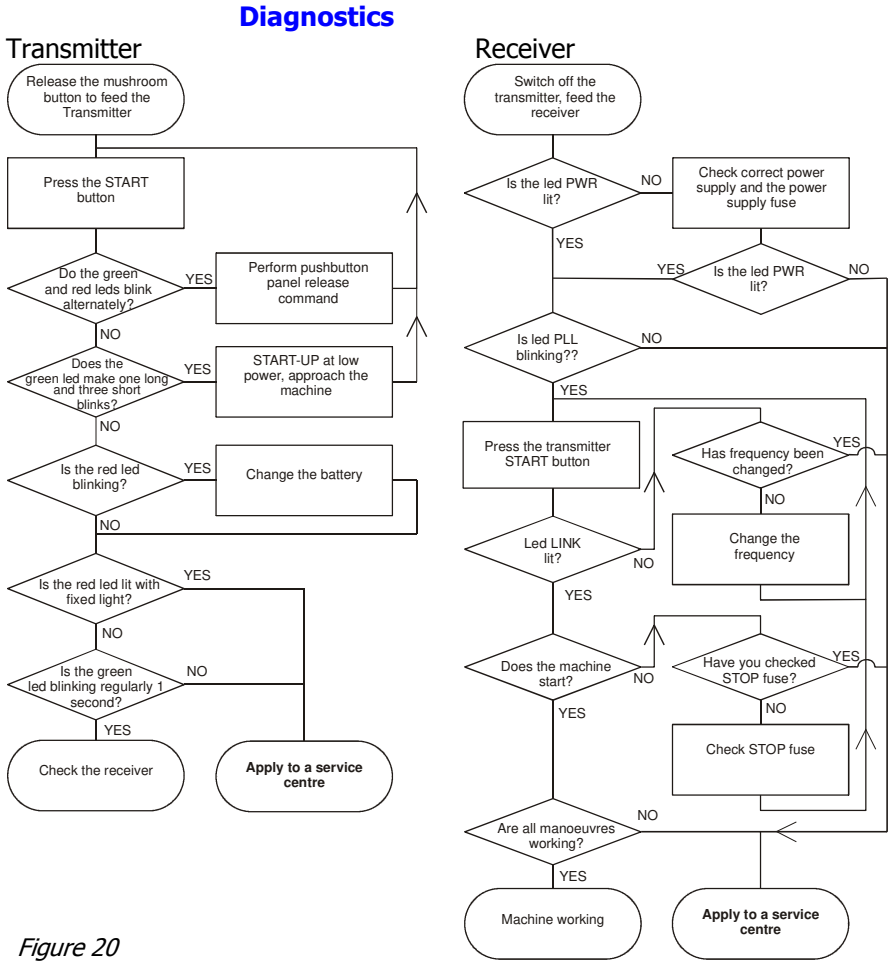

Figure 20

OPERATING PRINCIPLE

Description of the Transmitter

The commands given with the buttons are processed by the microprocessor which constructs the coupling telegram including the univocal code and sends it to the radio transmission module.

Description of the Receiver

The coupling telegram received by the radio receiving module is processed by both microprocessors µPA and µPB which check its authenticity, comparing it with the univocal code. If the data received are valid, microprocessor A activates the Safety Relays while microprocessor B activates the relays of the controls.
In the case of active or passive emergency commands, lack of radio signal or disturbance, the microprocessors A and B both block the operating machine.
The processing of the data is carried out independently in the two microprocessors. This means that safety is always guaranteed even in the case of a breakdown of one of the two microprocessors (redundant safety system).

Radio control device block diagram

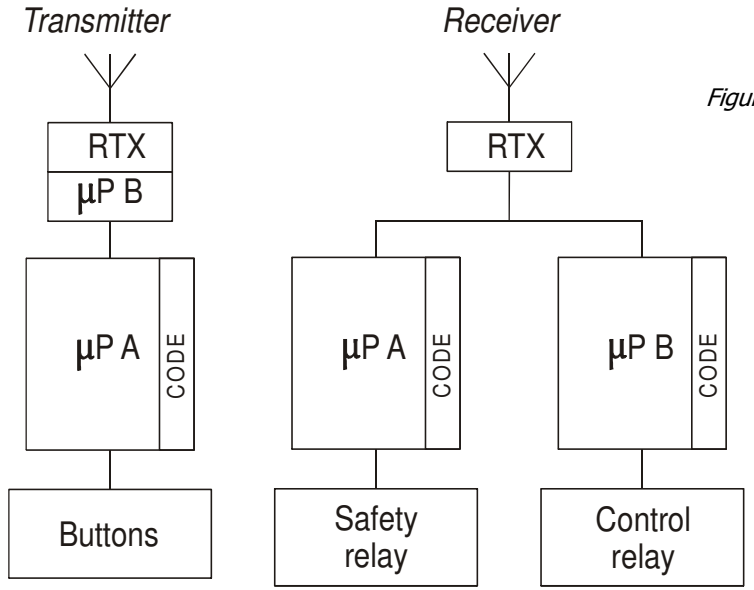

Figure 21

Description of the coupling telegram

The telegram has a constant length, composed of 144 bits:

- 48 bits are dedicated to the start line;
- 48 bits are assigned to the coupling address between receiver and transmitter;
- 8 bits are used for the progressive count of the telegrams;
- 24 bits implement a protection algorithm with a marked probability of detecting errors lower than 10^{-8} (less than 1 in 100,000,000);
- 16 bits are used for the control code.

The 48 address bits are used to couple the transmitter to the receiver with a code which is set by the manufacturer and assigned univocally to each radio control device produced using the new and exclusive "REMSYS CODE" system.

IDENTIFICATION OF THE FUSES

See the receiver figure (depending on model): *5, 7 or 9*

- STOP RELAY fuse 5x20 **4 A**
- Power supply fuse
  Power supply DC 12-24V 5x20 **1.6 A**
  Power supply AC 24-115V 5x20 **1 A**
- Optional
  Power supply AC 230V 5x20 **0.5 A**

TECHNICAL CHARACTERISTICS

Multi-band operating frequency (depending on model):

TTX7 433.050 – 434.790 MHz/ Channel spacing 25kHz/ No. of channels 60
TTX7 869.700 – 870.000 MHz/ Channel spacing 25kHz/ No. of channels 12
TTX8 902 – 928 MHz/ Channel spacing 500kHz/ No. of channels 50
TTX9 418.950 – 419.200 MHz/ Channel spacing 25kHz/ No. of channels 11

The frequency band varies depending on the standards in the country where the product is due to be used.

Hamming code distance: **> 4** Modulation: **GFSK Manchester code**
Maximum number simultaneous commands (depending on model): **8**
Response time to commands: **50 ms**
Active emergency stop command response time: **50 ms**
Command passive emergency response time: **1 s**
Operating and storage temperature: **-20°C to +70°C** *(-4°F to +158°F)*

Command	PL	Category	SIL
STOP	**d**	3	2
Button/Lever *(UMFS)*	**c**	2	1

PL *(EN ISO 13849-1)*
SIL *(EN IEC 62061)*

Transmitter unit

Housing protection rating: **IP 65** Material: **PA6 GF**
Dimensions: (L×H×P) 83 × 174 × 42 mm *(L×W×H) 3.27 × 6.85 × 1.65 in*
Weight: 350 g *0.77 lb*
Oscillator: **digital PLL** Antenna: **integrated**
Radio frequency output power (depending on model): **from 1 to 10 mW**
Power consumption: **from 13.5 mA to 24 mA** Supply voltage: **3.6 VDC**
Working range and typical run time @20°C (68°F):

- Maximum RF power: 70 m, 500 hours
- Average RF power: 40 m, 850 hours
- Minimum RF power: 20 m, 1000 hours

Low battery warning: at **≈ 30 hours** left Battery: integrated lithium **3.6V**

Receiver unit

Radiofrequency receiver: **Single Chip**
Antenna (according to model): **integrated** or **external**
Command relay contact capacity: **4A** (DC1/AC1)* / 115V
Stop relay contact capacity: **4A** (DC1/AC1)* / 115V

* the same current can be supported also in category DC13 (inductive load) connecting a diode in parallel to the load. For use in category AC15, we recommend connecting a suitable RC circuit in parallel to the load for extra voltage damping. (Ref. IEC/EN60947).

Power supply (depending on model): **DC 12-24V** ±25% or **AC 24-115V** ±10%
Optional only RUBYBOX-T7: **AC 230V** ±10% 50-60 Hz 0.2A

RUBYBOX-T7: waterproof enclosure for external installation
Material: PA6 GF V0 - Degree of protection: IP65
Dimensions: 166 × 279 × 91 mm (L×W×H) *6.53 × 10.98 × 3.58 in*
ECOBOX-T7: waterproof enclosure for external installation
Material: PA6 GF V0 - Degree of protection: IP65
Dimensions: 129 × 178 × 51 mm (L×W×H) *2.08 × 7.01 × 2.01 in*
RXDIN-T7: ModulBox housing to be fitted on DIN EN 50022 rail
Material: ABS - Degree of protection: IP20
Dimensions: 158 × 90 × 75 mm (L×W×H) *6.22 × 3.54 × 2.95 in*

NOTES:

INSERT HERE

THE ANNEXES

(if required)

WARRANTY TERMS

REMdevice covers the device with a 12-month warranty.
The date of the transport document is used as the start date of the warranty period.
The warranty is valid only for devices affected by defects in manufacturing. The radio control must NOT have undergone attempted repairs, been tampered with or had parts replaced by personnel who have not been authorized by REMdevice.
The warranty shall be voided in the event of misuse or incorrect installation.
Devices under warranty must be repaired at an authorized support centre or at REMdevice's own facility.
Parts affected by defects in manufacturing will be replaced free of charge; this does not include transport costs for sending and returning the device.
The warranty does not cover wear parts and batteries.
REMdevice shall not accept claims for compensation for downtime since machinery is required to have its own manual controls.
REMdevice shall not be liable for damage, loss or theft to/of new or repaired devices, or devices due to be repaired, while in transit.
REMdevice shall not perform work (under warranty or outside warranty) on devices with missing serial numbers or without previous arrangements having been made with the person requesting the work.

Manufacturer: **REMdevice®** S.r.L

Email: info@remdevice.com
http://www.remdevice.com

REMdevice® S.r.L
via Alfredo Munari n. 72
36055 Nove (VI)
ITALY

TEL +39 0424 500 262
FAX +39 0424 508 631

Copyright © 2018 – REMdevice® S.r.L – All rights reserved.

While the information herein has been checked thoroughly for accuracy and completeness, REMdevice disclaims liability for any errors or omissions.
REMdevice reserves the right to edit the specifications described herein at any time without prior notice.
No part of the information herein may be reproduced, transmitted, transcribed, stored in a retrieval system, or translated into any language in any form, without the prior written permission of REMdevice ® S.r.L