REMdevice
Radio Control Equipment

INSTRUCTION MANUAL

RADIO CONTROL DEVICES @ 2G4

T3 T5 T7

REMsys CODE link system

Restricted Area System

REMdevice S.r.l.
Via Alfredo Munari, 72
36055 Nove (VI)
ITALY
Tel. +39 0424 500 262
Fax +39 0424 508 631
www.remdevice.com
E-Mail: info@remdevice.com

CE

SUMMARY

- Instructions for correct and safe use of the radio control device 4
- Installation of the radio control device 8
- Arrangement and description of controls 10
- Inspection of the radio control device 15
- Keeping the radio control device in good working order 16
- Changing the battery 17
- Changing the transmitter 18
- Programming the radio control device 19
- Conformity 20
- Diagnostics 23
- Operating principle 24
- Identification of the fuses 26
- Technical Characteristics 27
- Guarantee conditions 28

ATTENTION!

Before installing and/or using the radio control device, CAREFULLY READ this instructions manual and follow the advice it contains. Use of the radio control device by non qualified personnel and/or incorrect installation may cause severe harm to persons and things.

General Information

The remote control of the T7 2G4 series is designed to meet specific user requirements, first among them the ability to work on lifting machines, such as cranes, defining the operational area.
For this function Remdevice filed **Utility Patent**.
The use of radio frequencies in the 2.4 GHz band with high directivity and the special panel antenna, appropriately installed in the overhead crane above the work area, allows to limit the operating distance where the operator can move safely and preventing, therefore, its use over this distance.
This system, besides the advantage of ensuring that the operator is located in the immediate vicinity of the machine for its use, has the additional advantage of being immune to interference from other transmitters installed on machines in the vicinity, avoiding the very common problems in industrials sites where the installer has increasing difficulty in arrange the coexistence of the many existing radio equipment.

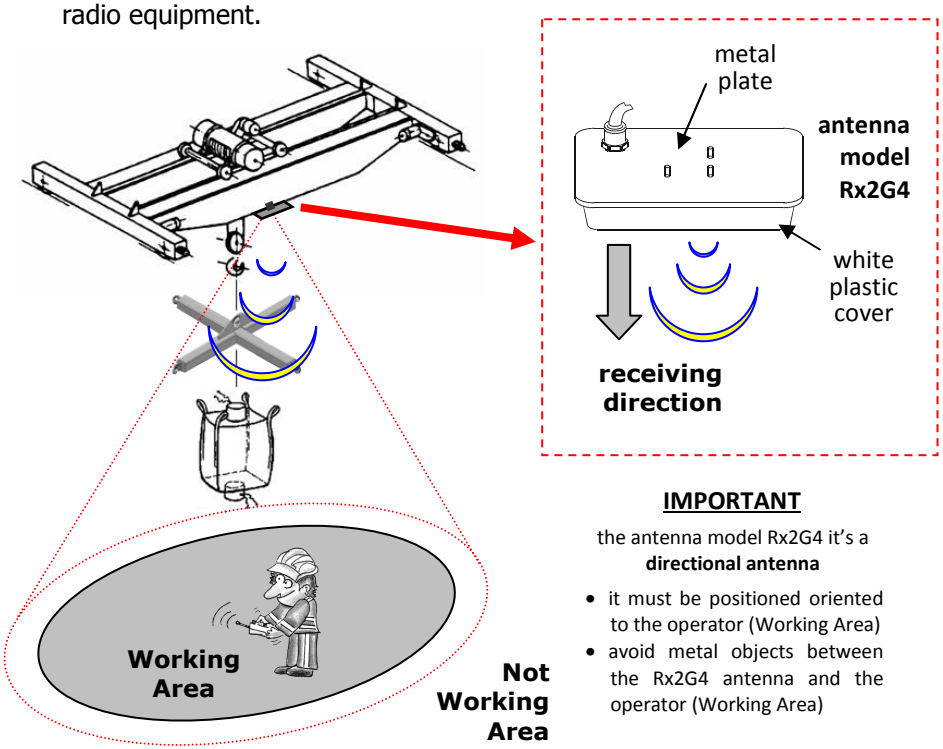

IMPORTANT

the antenna model Rx2G4 it's a **directional antenna**

- it must be positioned oriented to the operator (Working Area)
- avoid metal objects between the Rx2G4 antenna and the operator (Working Area)

INSTRUCTIONS FOR CORRECT AND SAFE USE OF THE RADIO CONTROL DEVICE

The **use** of the radio control device is reserved to expert operators who have read the instructions on the conditions of use of the radio controlled machine and who respect the safety regulations imposed by law in the work area.

The manufacturer of the radio control device does not answer for damage to persons or things caused by:

- clumsy and improper use of the radio control device;
- incorrect wiring or electrical connection;
- tampering;
- modification of the structural characteristics of the radio control device;
- replacement of parts with non original spare parts;
- lack of maintenance;
- failure to replace worn, broken or faulty parts;
- use of the radio control device bypassing its intrinsic safety or in any way altering its original functionality.

The radio control device operates with radio signals, it is able to operate the machine to which it is connected even in the presence of barriers that prevent visibility, such as: masonry walls, metal or wooden panels, machines, equipment, buildings, vehicles, etc.

Use of the radio control device

- Place the transmitter in conditions of perfect and complete visibility of the radio-controlled machine;
- do not stand under hanging weights;
- do not operate in a position of unsafe equilibrium;
- pay attention to the identification symbols of the control device located next to each button;
- avoid pressing the buttons if you do not know exactly what their function is.

Transmitter T3 - Transmitter T5

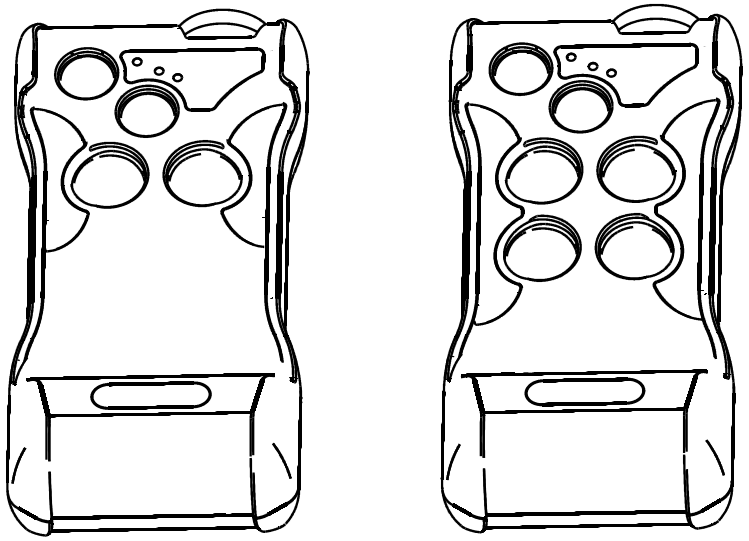

Transmitter T7

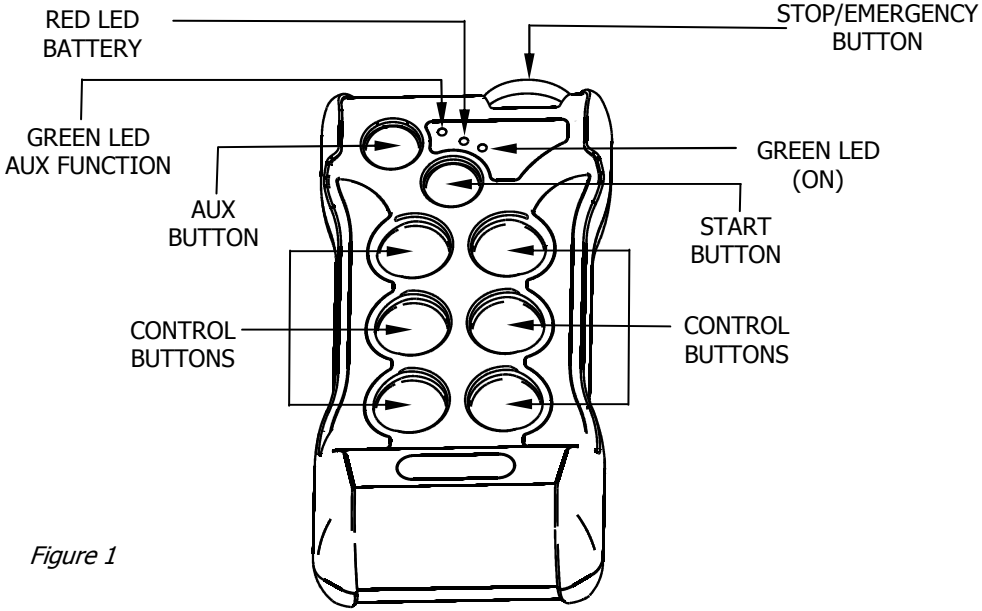

Figure 1

Activation

1- Turn and release the Stop/Emergency button (Figure 1): power is supplied to the transmitter.
2- Press the START button. Activation is indicated by the blinking of the green led (ON) at intervals of about 1 second. If the transmitter gives a Beep accompanied by the lighting of the red led, check to make sure that other buttons have not been pressed. If the receiver is ready too, you should hear the sound of the obligatory acoustic warning installed on the operating machine.

Use of the radio control device

Press the control buttons for the desired function, taking care as they may be of the type with a sequential double click: by increasing the pressure on the button, a second contact is made that is normally assigned to increasing the speed of a machine movement.
If any kind of difficulty occurs in controlling the operating machine (for mechanical or electrical reasons, or at any rate independent of the intentions of the operator), immediately press the red Stop/Emergency mushroom button.
The radio control device has an automatic interlock on the controls of opposite or incompatible functions: for example, Up/Down, Left/Right, Forward/Back.
Periodically check the efficiency of the red Stop/Emergency mushroom button.

Switching off

Press the red Stop/Emergency mushroom button.
At the end of the manoeuvres, and anyway before putting the transmitter away, always switch it off.
Do not leave the transmitter unattended when switched on and unlocked.
Put the transmitter away in a safe place, inaccessible to unauthorised persons.
Never entrust the transmitter to unskilled personnel.

Self cut-out

When this function is activated (factory setting), the transmitter switches off automatically after 3 minutes of inactivity. It is restarted when the START button is pressed.
In self cut-out condition, the equipment still uses a small amount of energy: to avoid this unnecessary consumption, press the red Stop/Emergency mushroom button.

Locking and Unlocking the keypad

It is possible to block the use of the transmitter as follows:

- supply power to the transmitter by turning and releasing the red Stop/Emergency mushroom button
- press the buttons **1**, **2**, **7** together and simultaneously the Start button **S**, then release.

If you try to activate the transmitter after this operation, the Red Led (BATTERY) and the Green one (ON), blink alternately and the transmitter emits an acoustic warning.
To unlock the use of the transmitter, repeat the sequence.

Figure 2

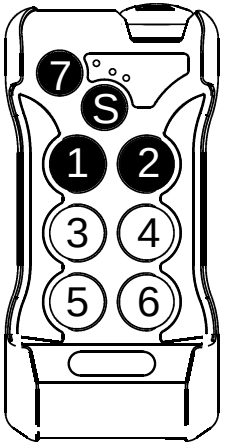

Battery Life

The battery is inside the transmitter. When it is run down, this is indicated on the transmitter by the regular blinking of the Red Led (BATTERY).
After the first signal, the radio control device is able to work perfectly for over 30 hours consecutively.
The working life of the transmitter with a new and fully charged battery is about 2000 hours (continuous duty).

INSTALLATION OF THE RADIO CONTROL DEVICE

REMdevice is at the disposal of installation technicians to supply useful information that will ensure the correct installation and commissioning of the radio control device.

Training of personnel

The **installation** of the radio control device on operating machines must be carried out in compliance with the Machines Directive and the harmonised regulations. Installation must be performed by qualified technical personnel, who know the technical characteristics of the radio control device and of the operating machine, and who are enabled to compile the document certifying correct installation.
The installer is responsible for any damage to persons or things resulting from receiver wiring errors, from failure to observe the safety regulations, from the use of unsuitable material for installing the receiver, and from non inspection or incomplete inspection of the radio-controlled machine.

To ensure proper use of the remote control must always be complied with all applicable regulations on work safety and accident prevention at work.
Also you should always observe all local laws regarding the use of the machine and the radio remote control in each country where the system is used.
Remdevice can not accept any liability if the transmitter is used in not legal working conditions.

Risk Assessment

It Must always evaluate whether the machine can be remote-controlled or not, in fact, as required by technical standards (eg. ISO 12100 and ISO 14212) in which the system machine + remote control is used, it is necessary to make each machine a risk assessment with its analysis.
Only the positive outcome of this assessment may allow the installation and use of radio control.
The responsibility for this risk assessment is by the manufacturer of the machine itself and / or those who decide to install and use the remote control.
Remdevice can not accept any liability if this evaluation was not performed properly or has been partially done.
If the risk assessment requires it, it is necessary to provide protective measures to prevent, reduce and report situations of potential danger.
Must be considered that:
- The remote control T7 is not suitable for installation in environments requiring explosion-proof equipment, machines for handling, lifting and transportation of people or machines that could lead to dangerous situations in the event of shutdown due to loss of radio link;
- Due to noise or interference it may stop the persistent connection between the two radio units;

it must be taken into account all the warnings about installation, use and maintenance provided by Remdevice.

Position of the controls in the transmitter

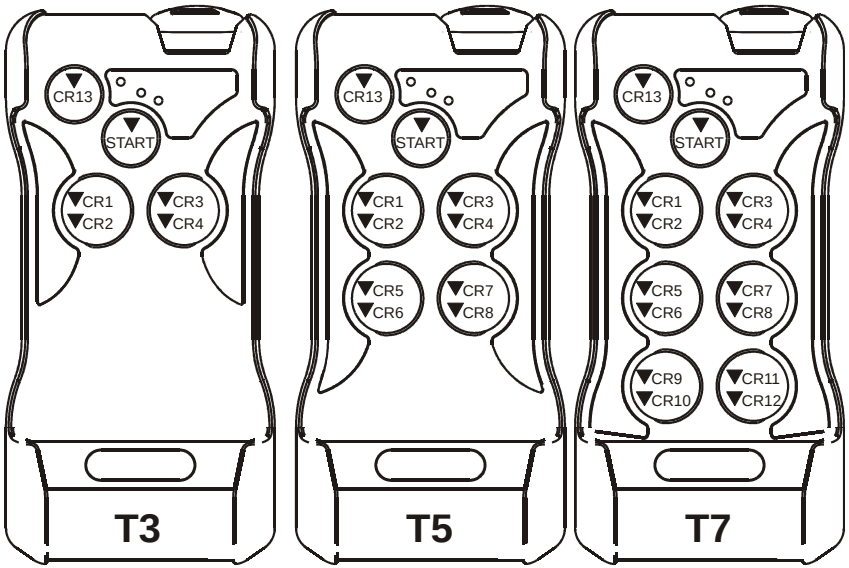

See also the paragraph: CHANGE OF RECEIVER FUNCTIONS

Figure 3

The **RubyBox-Terminal** unit, outdoor box must be placed in a location easily accessible to maintenance personnel and repair.
Connecting the **Rx2G4A Antenna** to receiver RubyBox-Terminal is made via the supplied cable, or alternatively a cable 6x0,25 twisted pair. Observe the colour of the wires as shown on the label near the plug.

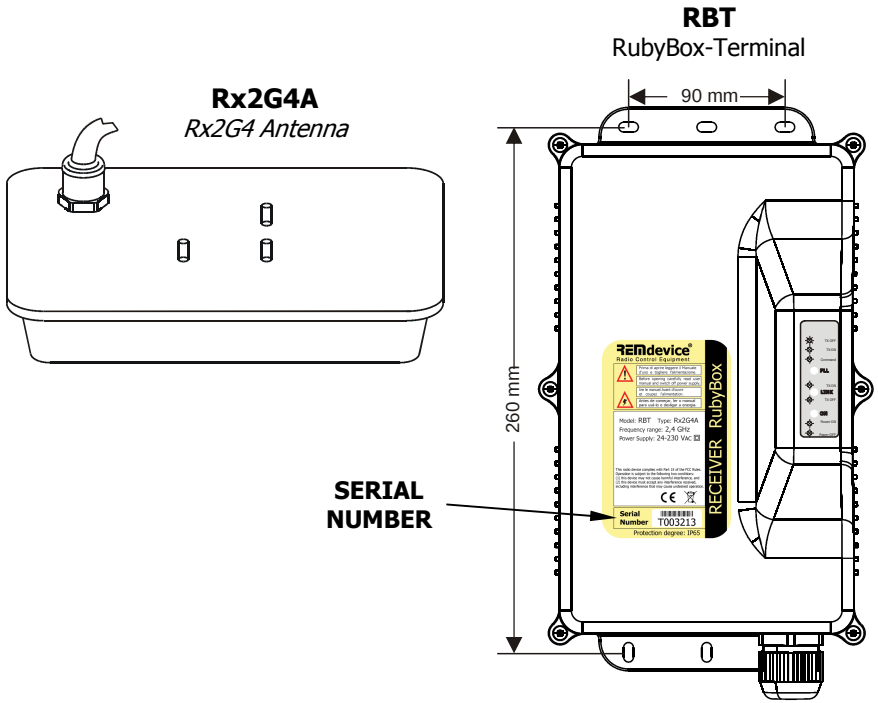

Figure 4

The Rx2G4A receiver must not be positioned inside screened metal structures (boxes, cupboards, trellises, tubes, grids, etc.), so as not to jeopardise the reception of the radio signal; For better efficiency must be placed in the area above the work area.
The measurements for drilling the holes for Ruby-terminal are indicated in Figure 4.
Never make a hole in the box. Avoid precarious fixing systems.

For correct and safe wiring of the Terminal, use a multicore cable and plug of the same type as those used for the wired pushbutton panel supplied with the machine.
Use caps to terminate the leads to be tightened to the receiver terminals and check the fastening accurately.

The simultaneous control of an operating machine with the radio control device and the wired pushbutton panel is NOT allowed.
Pay particular attention to the connection of the STOP/EMERGENCY circuit, following and respecting the machine's original wiring diagram.

Supplying power to the Receiver

Check that there is a suitable isolating device on the machine. Use a voltmeter to check that there is a suitable voltage on the machine's electric panel to supply the receiver. These feeding voltage values are given in the paragraph TECHNICAL CHARACTERISTICS and printed next to the connecting terminals, inside the receiver.
The phase and neutral or positive and negative polarities are indifferent.
The characteristics of the receiver relay contacts are given in the paragraph TECHNICAL CHARACTERISTICS..
The presence of voltage on the receiver is indicated by the Green Led ON with a fixed light.

RBT RubyBox-Terminal receiver

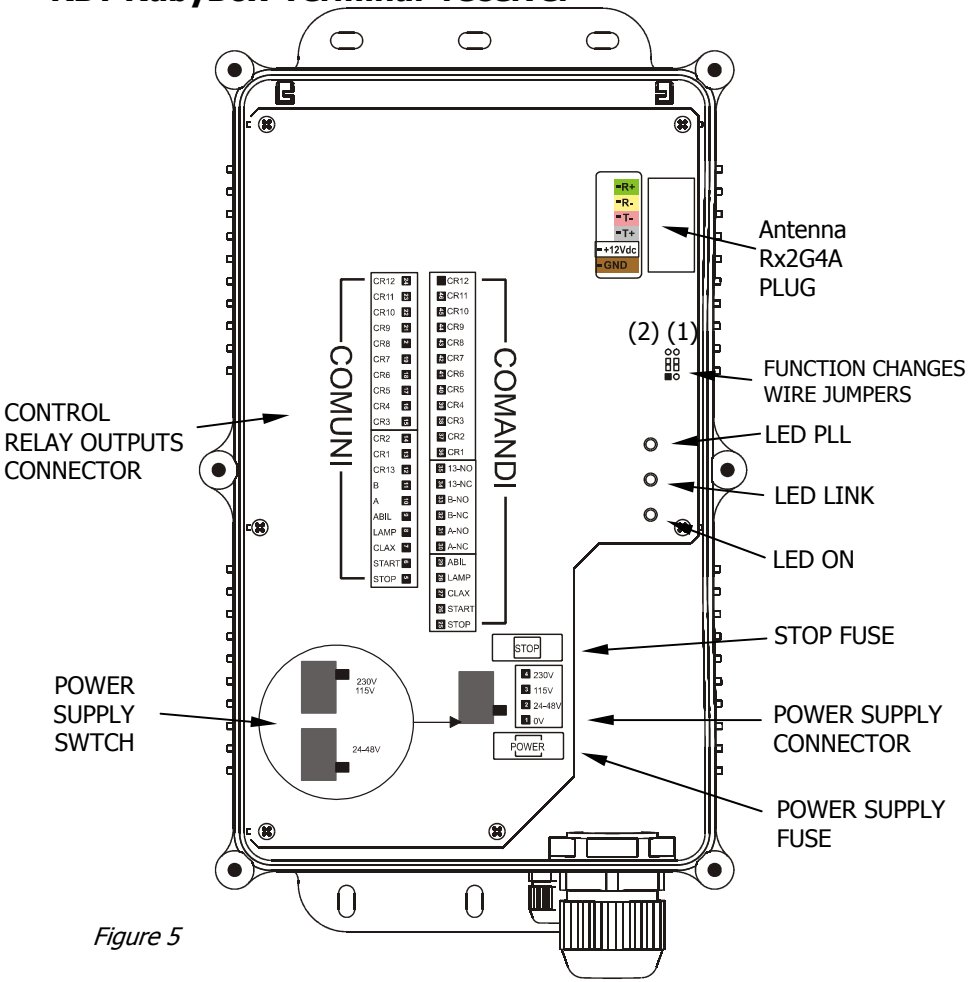

Figure 5

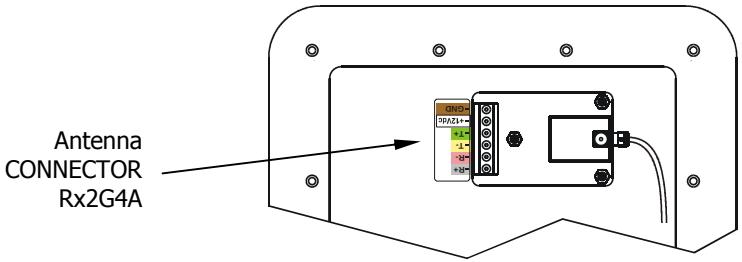

Arrangement of controls in the receiver RBT-T7

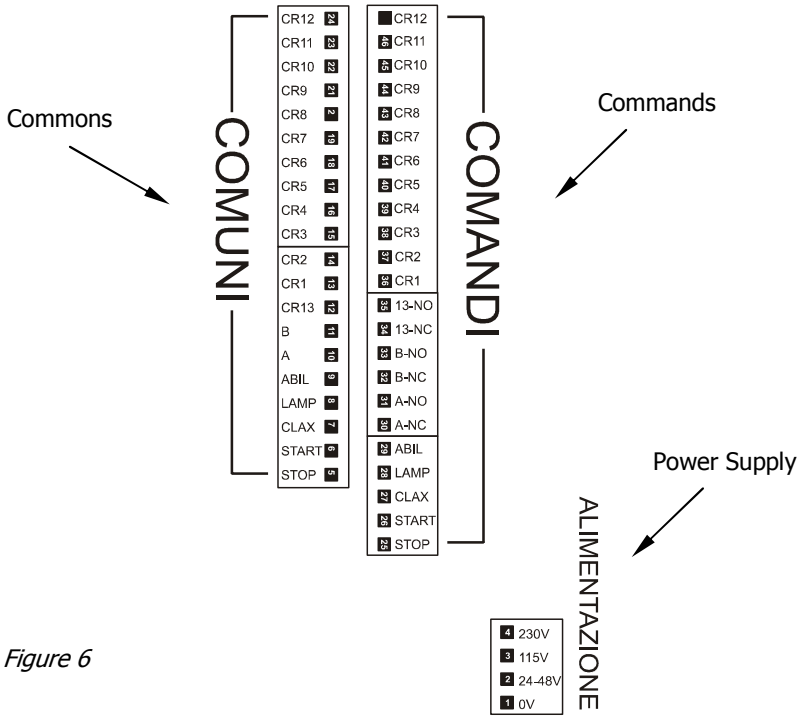

Figure 6

0V, 24-48V, 115V, 230V = Receiver power supply

STOP = Stop/Emergency Contact (N.C. with transmitter active)
START= Start Contact (N.O.)
CLAX = Horn Contact (N.O., it closes with the START command)
LAMP = Contact for flashing light (N.C. with transmitter active)
ABIL = Enabling Contact (N.O., it closes with any control button)
CR1-12 = Control relay contacts
CR13, A, B = Contacts of the relays assigned to the auxiliary button
N.O. = Normally Open
N.C. = Normally Closed

INSPECTION OF THE RADIO CONTROL DEVICE

With the operating machine turned off, insert the plug of the multicore cable of the receiver in place of that of the wired pushbutton panel and secure it with the fastening hooks; check that the connecting cable between the receiver and the machine does not hinder or get caught in the mechanical parts during movement of the machine.
Switch on the operating machine, remaining at a safe distance, that is outside its radius of action, as an error in wiring could cause it to start up accidentally.
In the receiver, check that the green led ON is lit (see Fig. 5), indicating that it is powered.
In the receiver, check that the green led PLL is blinking (see Fig. 5), indicating that waiting status of the radio signal.
Switch on the transmitter and check in the receiver that the green led LINK has a fixed light (see Fig. 5), indicating the correct communication between transmitter and receiver.

Checking the efficiency of the Stop/Emergency button and of the control buttons

Press the Stop/Emergency button (see Fig. 1) and check in the receiver that the led LINK switches off (see Fig. 5), indicating that the radio control has been deactivated.
To continue the inspection procedure, **reset** the Stop/Emergency button, activate the transmitter with the START button and then press a control button to make the machine perform the assigned movement: now while it is moving, press the Stop/Emergency button to check that the machine stops immediately.
After having reactivated the transmitter, press one button at a time and check that the machine performs the respective movement.
Walk away from the receiver and, still checking the machine movements, give the various commands in the different zones of the work area, to ensure that it is fully covered by the radio signal.

At the end of inspection, clearly fill in the wiring diagram of the receiver and sign the declaration of correct installation.

The **serial number** of the radio control device to be given on the documentation is indicated on the Receiver (fig. 4) and is not on the Transmitter.

KEEPING THE RADIO CONTROL DEVICE IN GOOD WORKING ORDER

Clean the transmitter periodically to prevent the accumulation over time of dirt which is difficult to remove and may cover the graphic symbols on the control buttons.
If the symbols become illegible, or the adhesive labels come off, it is recommended to apply new labels available from REMdevice.
Avoid using solvents to clean the device.
The transmitter must not be immersed in water.
Check the perfect seal of the transmitter gasket the absence of cracks on the shells and the integrity of the rubber of the buttons.
Any liquid infiltrations may severely damage or jeopardise the regular operation of the electric circuits inside the transmitter.
Special maintenance and repairs must be carried out only by specialised personnel authorised by REMdevice.
Perform the controls as described in the chapter "Checking the efficiency of the Stop/Emergency button and of the control buttons".
Never use the appliance if the Stop/Emergency button is not efficient.
The correct operation of the mushroom button ensures the immediate stop of all the functions of the operating machine and the deactivation of the radio control device. The breakage, even partial, or the imperfect efficiency of this button endanger the safety of the radio control device, making it no longer comply with the regulations.

Entrust reject material or the product to be scrapped to the authorised disposal centres in your territory.

CHANGING THE BATTERY

Remove the 8 closing screws and open the transmitter cover.
Take out the battery connector and replace it with a new one paying attention to remove the old adhesive tape replacing it with the new one supplied. Close the cover and retighten the closing screws.

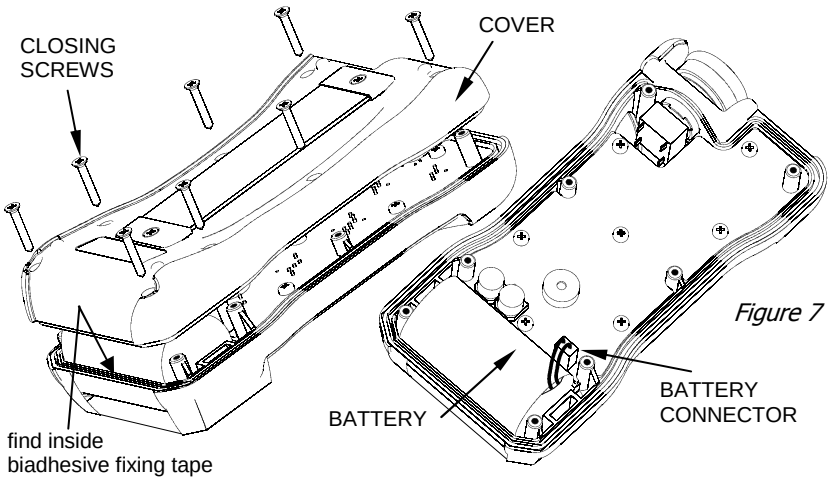

Figure 7

The battery is not rechargeable, do not apply voltage to its terminals, do not expose to high temperatures or to flames, do not try to open it!.

Do not dispose of old batteries in the environment and do not throw them into the containers for household waste.
The batteries must be disposed of according to local regulations, using the disposal service available in your own territory.

As an alternative to the battery provided it is possible to use alkaline batteries or ones that can be recharged with the battery charger provided.

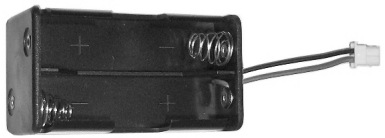

Figure 8

CHANGING THE TRANSMITTER

In the event of malfunction, breakage or loss of the transmitter, it is possible to replace it with a new one.

The programming of the code involves only the transmitter, while the receiver is combined and tuned automatically, thanks to the exclusive new patented **"REMSYS CODE" System**. For this reason the **serial number** of the radio control device is marked only on the Receiver.
The replacement of the transmitter does not involve any operation of modifying or labelling the transmitter itself.

- Disconnect the power from the receiver: if it is powered by the electric panel of the machine, turn off the main switch.
- Release the red Stop/Emergency mushroom button of the transmitter.
- Press the buttons **2** and **7** together and simultaneously the Start button **S**, and release.
  The green led ON starts to blink rapidly.
- Switch on the power to the receiver.
- When the transmitter recognises the receiver, the green led ON lights with a fixed light.
- Switch off the receiver by pressing the red Stop/Emergency mushroom button.
- Wait about 10 seconds, after which the new transmitter is ready for use.

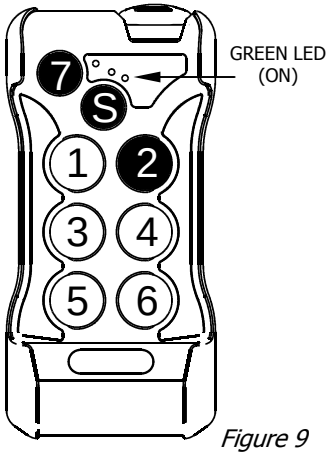

Figure 9

If the radio control device does not work, repeat the entire operation.

PROGRAMMING THE RADIO CONTROL DEVICE

Changing the frequency

The operation of changing frequency is carried out only on the transmitter, the receiver is tuned automatically.

- Release the red Stop/Emergency mushroom button.
- Press the buttons **1** and **7** together and simultaneously the Start button **S**, and release.
- The set channel is indicated first with the tens (number of pulses of the red Led), then with the units (number of pulses of the green Led).
- Example: channel 23 is displayed with 2 pulses of the red Led and three pulses of the green Led.
- The frequency values are given in the table on the facing page.

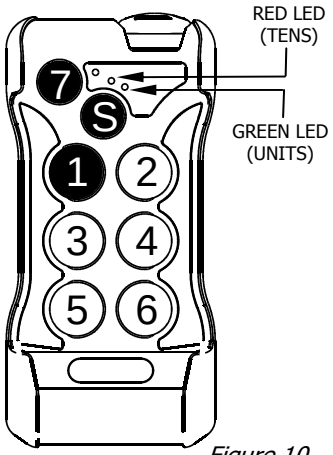

Figure 10

At the end of this sequence the transmitter has entered **frequency changing** mode

- Each time button **1** is pressed, the **CHANNEL –** function is obtained (units)
- Each time button **2** is pressed, the **CHANNEL +** function is obtained (units)
- Each time button **3** is pressed, the **CHANNEL – 10** function is obtained (tens)
- Each time button **4** is pressed, the **CHANNEL +10** function is obtained (tens)
- The set channel is indicated first with the tens (number of pulses of the red Led), then with the units (number of pulses of the green Led).
- Once the desired frequency value has been set, press the red Stop/Emergency mushroom button and wait at least 3 seconds, then release it.
- Press the START button **S** for a few seconds and hold it down until the machine starts.

Tables of frequencies

Band 2.4 GHz				
CH**6** 2.41075	CH**7** 2.41275	CH**8** 2.41475	CH**9** 2.41675	CH**10** 2.41875
CH**11** 2.42075	CH**12** 2.42275	CH**13** 2.42475	CH**14** 2.42675	CH**15** 2.42875
CH**16** 2.43075	CH**17** 2.43275	CH**18** 2.43475	CH**19** 2.43675	CH**20** 2.43875
CH**21** 2.44075	CH**22** 2.44275	CH**23** 2.44475	CH**24** 2.44675	CH**25** 2.44875
CH**26** 2.45075	CH**27** 2.45275	CH**28** 2.45475	CH**29** 2.45675	CH**30** 2.45875
CH**31** 2.46075	CH**32** 2.46275	CH**33** 2.46475	CH**34** 2.46675	CH**35** 2.46875
CH**36** 2.47075	CH**37** 2.47275	CH**38** 2.47475	CH**39** 2.47675	CH**40** 2.47875

Conformity

The t7 series radio control devices working in the frequency band 2.4 GHz complies with the essential requirements of the following regulations:

- **FCC** (Federal Communication Commission) Part 15
  transmitter FCC ID = RTF-TX2G4T7

Operation is subject to the following two conditions:
(1) this device may not cause harmful interference, and
(2) this device must accept any interference received, including interference that may cause undesired operation.

Changes or modifications not expressly approved by the party responsible for compliance could void the user's authority to operate the equipment.

The radio working frequency for Remote Controls is defined on each Country by specific laws and standards.
Not only for Remote Controls but also for any System composed by an Equipment wireless controlled, they shall comply with such laws and standards.

Programming the transmitter functions

It is possible to programme the following functions only using transmitting **T5** or **T7**:
1 - Self cut-out
2 -Radio frequency output power
3 - Enabling of **AUXILIARY 7** button (relay CR13)
4 - Operation of **AUXILIARY 7** button (relay CR13 or A-B)
5 - Low power start-up

To enter **function programming** mode
- Supply power to the transmitter by releasing the red Stop/Emergency mushroom button.
- Press the buttons **3, 4, 7** together and simultaneously the Start button **S**, then release.

After this sequence the green Led blinks rapidly.
Programme the functions following the table given below.
Each time the button chosen (1, 2, 3, 4, 5) is pressed the associated function changes status as displayed by the red Led.
To quit programming mode, press the red Stop/Emergency mushroom button.

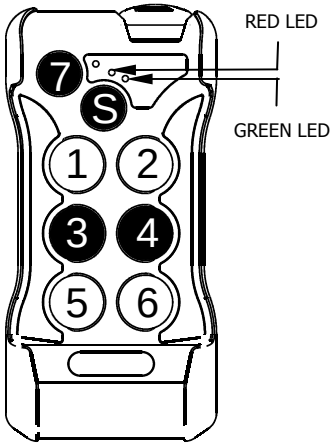

Figure 11

Button to press programmed function	Red Led Off	Red Led On	Red Led Blinking
Button 1 SELF CUT-OUT	**EXCLUDED**	**ACTIVE** after 3 minutes' inactivity	
Button 2 RADIO POWER	**LOW**	**NORMAL**	**HIGH**
Button 3 AUXILIARY BUTTON	Button 7 **EXCLUDED**	Button 7 **ACTIVE**	Button 7 **ACTIVE** **Relay A – Relay A+ B with CR1 or CR3**
Button 4 AUXILIARY BUTTON	Button 7 ACTIVE **Relay CR13 Pulse**	Button 7 ACTIVE **Relay CR13 Step by step**	Button 7 ACTIVE **Relay A - Relay B - Relay A+B**
Button 5			

Change of receiver functions

Operate on the "FUNCTION CHANGE" wire jumpers inside the receiver.

Wire Jumper		RECEIVER OPERATION
1	Open	Reserved
1	Closed	Reserved
2	Open	Button **7** performs the function of 3rd and 4th speed (self-retaining relays) for the first control activated. When the button for the opposite control is pressed, the 3rd and 4th speed self-retaining relays are disconnected step by step. If two or more controls are activated at the same time, the function of the button T7 has no effect.
2	Closed	The second click of each button activates a relay of its own.

BUTTONS-RELAYS CORRESPONDENCE
(Receiver)

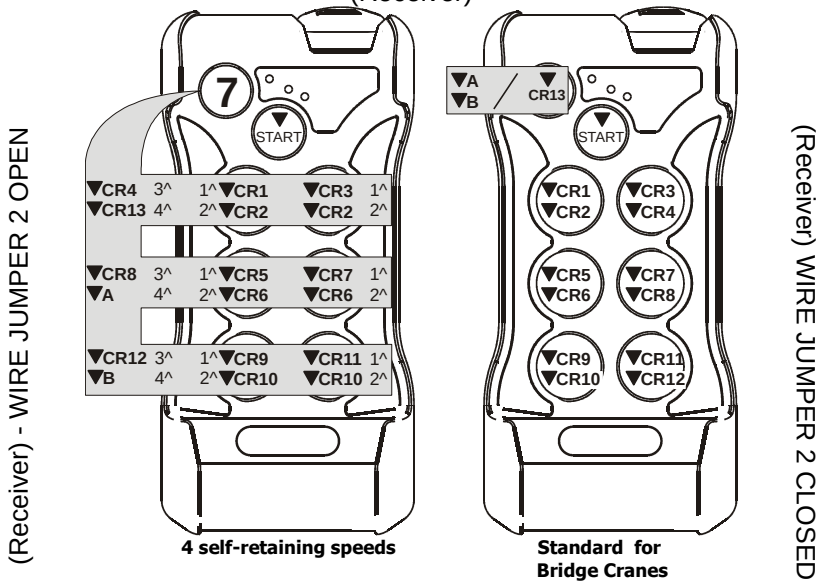

Figure 12

DIAGNOSTICS

If the radio-controlled machine is not working correctly, it is necessary to understand whether the problem depends on the machine or on the radio control device.
For thus purpose, connect the wired control and check that the machine works correctly without the radio control device.
If the machine works correctly without the radio control device, it is necessary to check the operation of the radio control device following the diagnostic procedure described below.

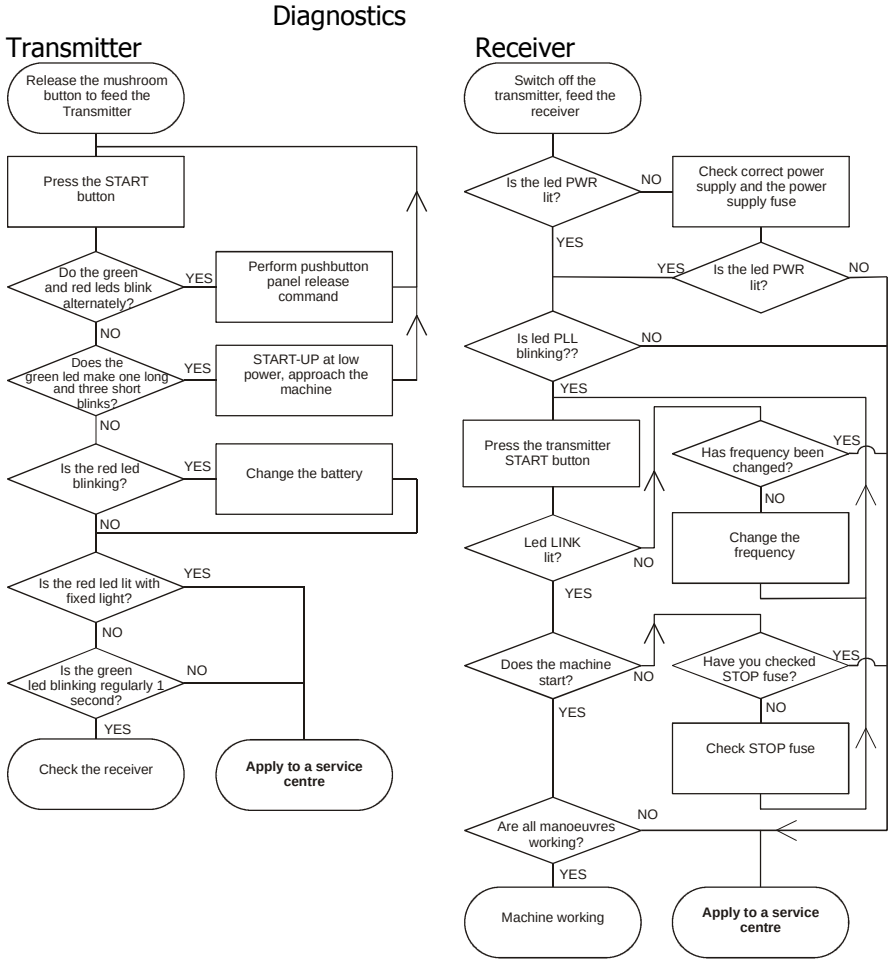

Figure 13

OPERATING PRINCIPLE

Description of the Transmitter

The commands given with the buttons are processed by the microprocessor which constructs the coupling telegram including the univocal code and sends it to the radio transmission module.

Description of the Receiver

The coupling telegram received by the radio receiving module is processed by microprocessor µPA which check its authenticity comparing it with the univocal code. If the data received are valid, microprocessor A send data to both microprocessors µPB and µPC that activates the Safety Relays and the control relays.
In the case of active or passive emergency commands, lack of radio signal or disturbance, the microprocessors B and C both block the operating machine.
The processing of the data is carried out independently in the two microprocessors. This means that safety is always guaranteed even in the case of a breakdown of one of the two microprocessors (redundant safety system).

Radio control device block diagram

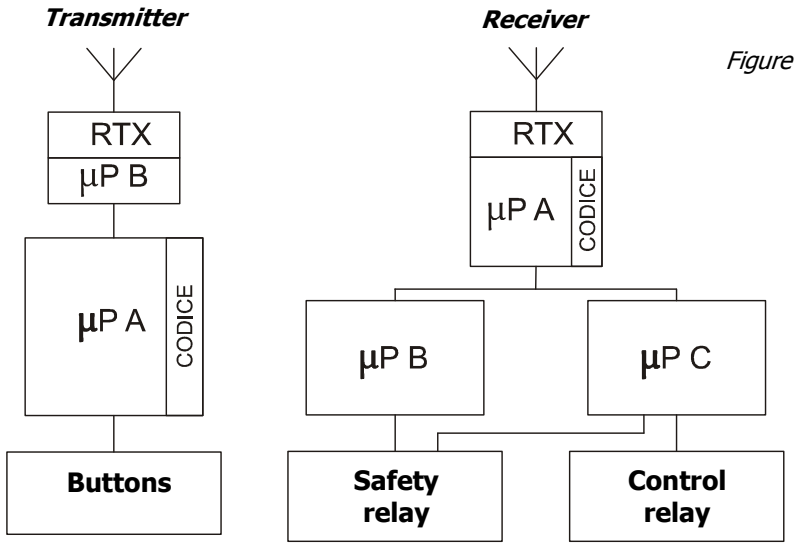

Figure 14

Description of the coupling telegram

The telegram has a constant length, composed of 160 bits:

- 64 bits are dedicated to the start line;
- 48 bits are assigned to the coupling address between receiver and transmitter;
- 16 bits implement a protection algorithm with a marked probability of detecting errors lower than 10^{-8} (less than 1 in 100,000,000);
- 24 bits are used for the control code.
- 8 bits are used for setup

The 48 address bits are used to couple the transmitter to the receiver with a code which is set by the manufacturer and assigned univocally to each radio control device produced using the new and exclusive "REMSYS CODE" system.

IDENTIFICATION OF THE FUSES

Receiver (fig. 5)

- STOP RELAY fuse 5x20 **4 A**

- Power supply fuse
  Power supply 24-48 Vdc 5x20 **1 A**
  Power supply 115 Vac/Vdc 5x20 **0.5 A**
  Power supply 230 Vac/Vdc 5x20 **0.5 A**

TECHNICAL CHARACTERISTICS

Parameters of the Radio Control device

- Operative frequency available in the following ranges:
2,400 – 2,483 GHz / Channelling pitch 2 MHz / N° channels 35
Hamming Code Distance > 4
Command response time: 40 ms
Active stop/emergency command response time: 40 ms
Passive emergency response time: 1 sec.
Performance level safety function (EN ISO 13849-1):
- Emergency Stop PL d
- protection against unintended movements of the neutral position PL c
Range: 30 m *depending from the programmed radio power*
Operating and storage temperature: -20°C / +70°C

Receiver

Radio-frequency receiver: Single Chip
Aerial: Panel Directive Antenna
Power of command relay contacts: 4A (DC1/AC1)* / 115V
Power of stop relay contacts: 4A (DC1/AC1)* / 115V

* connecting a diode in parallel with the load, the same current is allowed for category DC13 (inductive load). To comply with category AC15 is recommended to place in parallel connection with the load an appropriate overvoltage damping RC circuit *(Ref. IEC/EN60947)*

Power supply: 24-48VAC/DC 50-60Hz 0.4A 115-230VAC 50-60Hz 0.4A
Watertight case RubyBox-Terminal: degree of protection IP65
Dimensions: (L×H×D) 169×266×89 mm (6.53×10.47×3.50 In)
Antenna Rx2G4A: external watertight case, degree of protection IP65
Dimensions: (L×H×D) 266×202×60 mm (10.47×7.95×2.36 In)

Transmitter

Modulation: FM GFSK encoding
Radio frequency output power: 1 mW max
Oscillator: PLL digital synthesis
Aerial: integrated
Supply voltage: 3.6 VDC
Absorption: 8 mA max
Battery: integrated lithium ions 3.6 V – 19 Ah
Working life: up to 2000 hours (@ 20°C / 68°F)
Battery flat early warning: 30 hours
Casing: PA 6 (20% fg), degree of protection IP65
Dimensions: (L×H×D) 174×85×37 mm (6.85×3.46×1.46 In)
Weight: 350 g (0.77 Lb)

GUARANTEE CONDITIONS

REMdevice guarantees the radio control device for 12 months.
The starting date of the guarantee period is that of the transport document.
The guarantee is valid only for appliances that present manufacturing defects. The radio control device MUST NOT have undergone attempted repairs, tampering, or replacement of parts by personnel not authorised by REMdevice.
The guarantee is void in the case of incorrect use or incorrect installation.
The appliances under guarantee must be repaired at an authorised service centre or directly at REMdevice.
The components in which manufacturing defects are found will be replaced free of charge; the transport costs for collecting and delivering the appliance are excluded.
This guarantee does not cover parts subject to wear.
REMdevice does not accept requests for refund for machine down times, since the operating machines are equipped with a wired pushbutton panel.
REMdevice does not answer for damage, loss, theft occurring during the transport of new or repaired appliances, or ones to be repaired.
REMdevice does not carry out operations (under guarantee or out of guarantee) on appliances without the serial number and without having had prior contact with the requesting party.

Manufacturer: REMdevice® S.r.l. **E-Mail: info@remdevice.com**
http://www.remdevice.com

Commercial Offices – Production
Registered Head Office – Administration

REMdevice S.r.l.
via Alfredo Munari n. 72
36055 Nove (VI)
ITALY
TEL +39 0424 500 262
FAX +39 0424 508 631

Research & Development

REMdevice S.r.l.
Bogogno (NO)
ITALY

Copyright © 2013 – REMdevice ® S.r.l. All rights reserved.

The information supplied in this guide has been accurately checked, so as to be precise and exhaustive, however REMdevice declines any responsibility in the event of any errors and omissions.
REMdevice reserves the right to alter the specifications described at any time and without prior notice.
It is forbidden to reproduce, transmit, transcribe or store the information in a search system, even in part, or to translate it into another language in any form, without prior authorisation in writing by REMdevice ® s.r.l.