BOSCH

Installation Instructions

Wi-Fi Module

7736504944

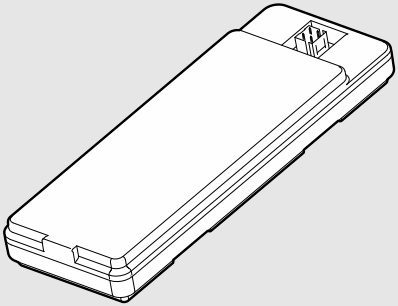

6 720 813 648 (2019/03) US

Table of contents

1 Explanation of symbols and safety instructions 3
1.1 Guideline to symbols 3
1.2 Safety instructions 4

2 Safety instructions 4

3 Product details 5
3.1 Declaration of conformity 5
3.2 Scope of delivery 5
3.3 Technical Details 5

4 Bosch Water APP 6
4.1 Available APPs 6

5 Wi-Fi module installation 7

6 Wi-Fi module activation 10

7 Wi-Fi options 13

8 Problem solving to activate Wi-Fi 15

9 FCC Regulatory notices 16

1 Explanation of symbols and safety instructions

1.1 Guideline to symbols

Warnings

CAUTION:

Warnings in this document are identified by a warning triangle printed against a grey background. Keywords at the start of a warning indicate the type and seriousness of the ensuing risk if measures to prevent the risk are not taken.

The following keywords are defined and can be used in this document:

- **DANGER** indicates a hazardous situation which, if not avoided, will result in death or serious injury.
- **WARNING** indicates a hazardous situation which, if not avoided, could result in death or serious injury.
- **CAUTION** indicates a hazardous situation which, if not avoided, could result in minor to moderate injury.
- **NOTICE** is used to address practices not related to personal injury.

Important information

This symbol indicates important information where there is no risk to people or property.

Additional symbols

Symbol	Function
▶	Sequence of steps
→	Cross-reference to other points in this document or to other documents
•	Listing/list entry
–	Listing/list entry (2nd level)

Table 1 Additional symbols

1.2 Safety instructions

These installation instructions are intended for technicians trained and experienced dealing with HVAC systems.

- ▶ Read the installation instructions before starting the installation.
- ▶ Observe safety instructions and warnings.
- ▶ Observe national and regional regulations, technical rules and guidelines.
- ▶ Document all work performed.

Electric work

- ▶ Before performing electrical work, disconnect the power and secure the unit against unintentional reconnection.
- ▶ Ensure the system has been disconnected from the power supply.

2 Safety instructions

- ▶ Read the following instructions very carefully to ensure correct operation.
- ▶ Follow safety instructions.

WARNING:

This product can expose you to chemicals including Lead and Lead components, which are known to the State of California to cause cancer and birth defects or other reproductive harm. For more information go to www.P65Warnings.ca.gov.

WARNING:

Electrical discharge!

For safety reasons, disconnect the power supply to the water heater before performing installation.

3 Product details

3.1 Declaration of conformity

This module complies with the requirements of the Radio Equipment Directive (2014/53/EU) and is authorized under FCC rules, 47 CFR Part2.

3.2 Scope of delivery

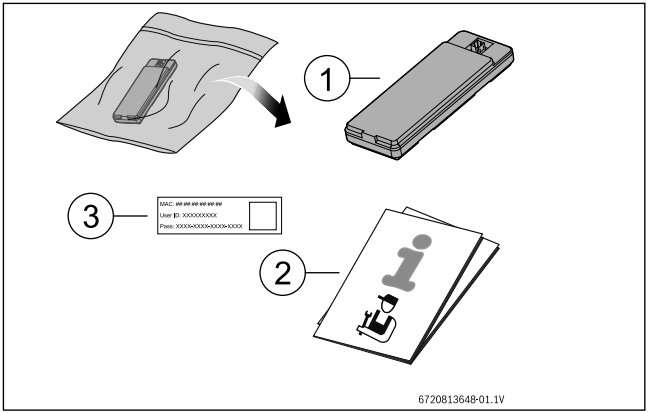

Fig. 1 Scope of delivery

[1] Wi-Fi Module
[2] Installation manual
[3] Data login sticker

3.3 Technical Details

Gateway for remote communication with water heaters using Wi-Fi.

Operation modes	802.11b/g Hotspot (HT)
Security	WPA/WPA2 (personal)
TCP/IP Stack	IPv4
ID Addressing	Static IP, DHCP
Frequency Band	2.4 GHz
Power Consumption	Voltage: 3.3V +/- 0.1V Current: <350mA [8738714760 / 7736504944]
Temperature Range	-20 °C up to +60 °C
Frequency	2.4 GHz
Type of protection	IPx0

Table 2

4 Bosch Water APP

4.1 Available APPs

The following APPs are available for Android and IOS for communication with the water heater.

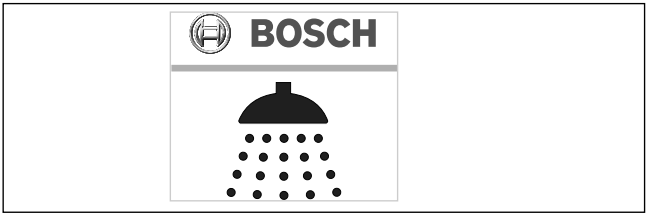

Fig. 2 Bosch Water APP

- Search for "Bosch Water" on the android or IOS stores to download app.

5 Wi-Fi module installation

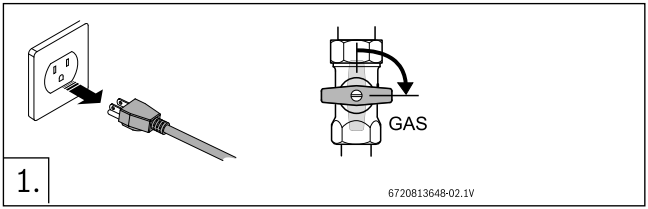

Fig. 3 Disconnect appliance from power and shut-off gas

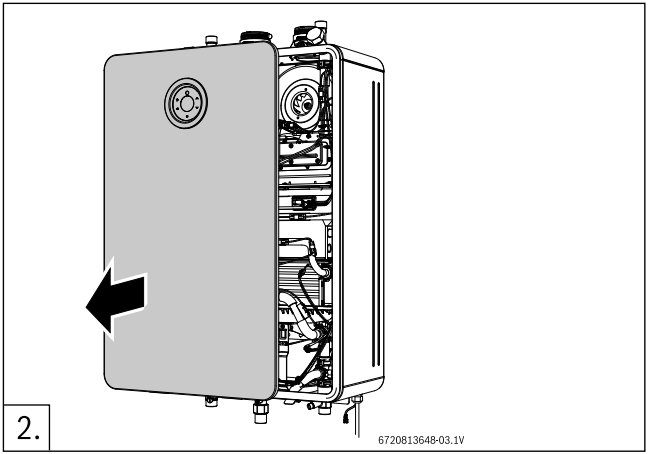

Fig. 4 Remove front cover

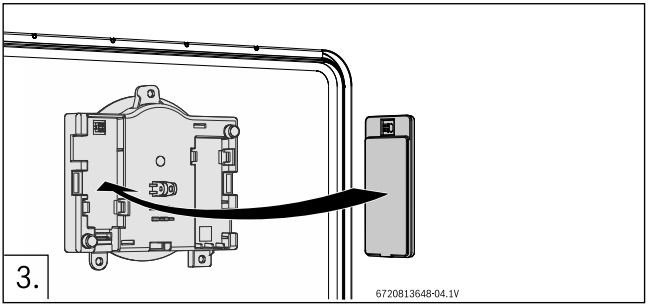

Fig. 5 Install Wi-Fi module

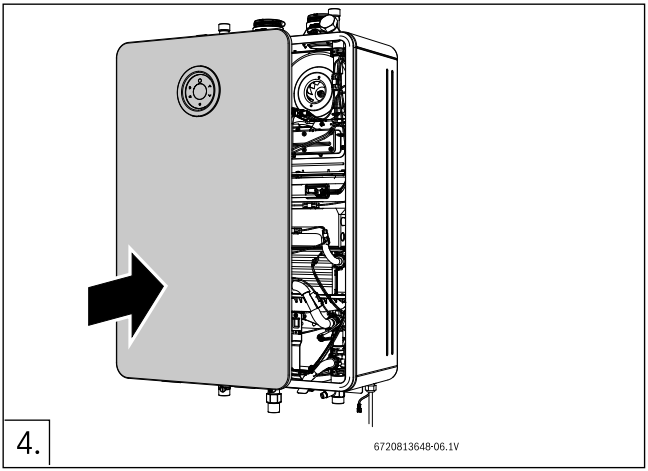

Fig. 6 Install the front cover

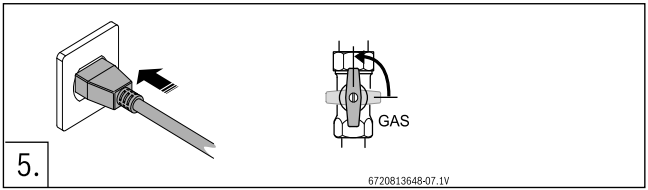

Fig. 7 Plug in the power cord and turn on the gas supply

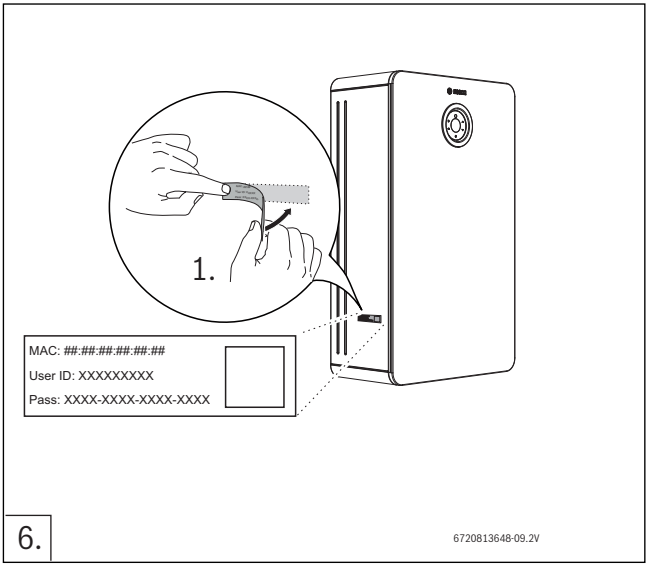

Fig. 8 Adhere data login sticker to side of appliance

6 Wi-Fi module activation

Before activating Wi-Fi module,

- ▶ Unplug the appliance from the power supply.

The Wi-Fi module must be activated within 60 minutes after plugging in the appliance to the power supply.
If it's not possible to configure Wi-Fi menu,

- ▶ See section 8 "Problem solving to activate Wi-Fi".

- ▶ Plug in the appliance to the power supply and wait for initialization to finalize.
- ▶ Touch the symbol ↩ .
  Display shows **P4 Information**.
- ▶ Touch the symbol ∨ until the display shows **SA Settings**.
- ▶ Touch the symbol ok .
- ▶ Use the symbols ∧ or ∨ to select **A7 Wireless Connectivity**
- ▶ Touch the symbol ok .
  Display shows,
  – **WF Wi-Fi**
- ▶ Touch the symbol ok .

Two options are available to activate Wi-Fi module;

- Option 1 - Connect the appliance to a network (**SC Scan**).
- Option 2 - Connect the appliance using the built-in Hotspot (**HT Hotspot**).

The option **HT Hotspot** is generally chosen in case there is no domestic Wi-Fi connection available.

6.1 Option 1 - Connect the appliance to a network (SC Scan)

How to connect;

- ▶ Use the symbols ⌃ or ⌄ to select **SC Scan**.
- ▶ Touch the symbol ok .
  Display shows **list of available networks**.
- ▶ Use the symbols ⌃ or ⌄ to select the Wi-Fi network.
- ▶ Touch the symbol ok .
  Insert network password.
- ▶ Use the symbols ⌃ or ⌄ to select the letters and symbols from the list.
- ▶ Touch the symbol ok , to confirm each letter or symbol.
- ▶ To save the password use the symbols ⌃ or ⌄ to select **END**.
- ▶ Touch the symbol ok .
- ▶ Touch the symbol ↩ to return to main menu.
  Display shows temperature value.
  Appliance is connected to a network.
- ▶ Download the *"Bosch Water"* app, available for Android and IOS for communication with the water heater.

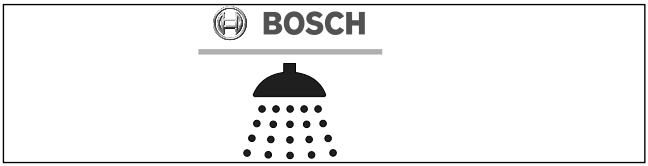

Fig. 9 Bosch Water APP

- ▶ Open the app and follow the instructions.
- ▶ Use the smartphone to scan the QR code located on the data login sticker, see fig. 8.

Follow on screen instructions after scanning the APP.

Wi-Fi module is activated.

6.2 Option 2 - Connect using the built-in Hotspot (HT Hotspot)

How to configure Hotspot;

HT Hotspot menu is not displayed in the HMI if the appliance is connected to a network (**SC Scan**).
Reset Wi-Fi connection, by selecting **RE Reset**, as described in section 7.

- ▶ Use the symbols ⌃ or ⌄ to select **HT Hotspot**.
- ▶ Touch the symbol ok .
  Define password with more than 8 characters.
- ▶ Choose the letters and symbols from the list.
- ▶ Touch the symbol ok , to confirm each letter or symbol.
- ▶ To save the password use the symbols ⌃ or ⌄ to select **END**.
- ▶ Touch the symbol ok .
- ▶ Touch the symbol ↩ to return to main menu.
  Display shows temperature value.
  HT Hotspot option is defined.
- ▶ Download the *"Bosch Water"* app, available for Android and IOS for communication with the water heater, see fig. 2.

Do not open the *Bosch Water* app.

- ▶ In the smartphone, go to;
  Settings > Wireless and Networks> Wi-Fi.
- ▶ Select the network named "waterheater-xxxxxx", where "xxxxxx" is the last 6 digits of the "MAC" address.
- ▶ Write the same password you defined in **HT Hotspot** menu.
- ▶ Open the app and follow the instructions.
- ▶ Use the smartphone to scan the QR code located on the left side of front cover, see fig. 8.

- ▶ Define a User password in the Bosch Water app.
  Wi-Fi module is activated.

7 Wi-Fi options

After connecting the appliance to a network, the following menus are available within the **A7 Wireless Connectivity** menu:

- **ST Status**
- **DI Disconnect**
- **RE Reset**
- **MA MAC Address**
- **IP IP Address**

To change Wi-Fi settings, access A7 Wireless Connectivity:

- ▶ Touch the symbol ↩ .
  Display shows **P4 Information**.
- ▶ Touch the symbol ∨ until the display shows **SA Settings**.
- ▶ Touch the symbol ok .
- ▶ Use the symbols ∧ or ∨ to choose **A7 Wireless Connectivity**.
- ▶ Touch the symbol ok .
  Display shows **Wi-Fi**,
- ▶ Touch the symbol ok .
- ▶ Use the symbols ∧ or ∨ to select one option from the list.

ST Status

Display shows the status of wireless connection:

- connected
- disconnected
- hotspot

If HMI is connected to a Wi-Fi network, display shows the network name.

DI Disconnect

This menu will disconnect the wi-fi module from the wireless connection.

- ▶ Choose DI Disconnect.

- Choose the symbol ok .
  Display shows, **Are you sure?**
  - **Yes**
  - **No**
- Choose **Yes**.
  A green check mark is displayed indicating that the appliance is disconnected from the network.

RE Reset

Choose this option to reset all Wi-Fi connection parameters or User password defined in the Bosch Water app.

- Choose **RE Reset**.
- Touch the symbol ok .
  Display shows,
  - **RW Reset Wi-Fi**[1)]
  - **RU Reset User Passwords**[2)]
- Use the symbols ^ or v to select one option from the list.
- Touch the symbol ok .
  Display shows,
  - **Yes**
  - **No**

  If choose **Yes**,
- Touch the symbol ok .
  A green check mark is displayed indicating that reset is complete.

1) Reset all Wi-Fi network connections.
2) Reset User password defined in the Bosch Water app.

8 Problem solving to activate Wi-Fi

Network issues or poor Wi-Fi signal strength

Wi-Fi issues may be caused by network problems such as low-signal strength. Ensure the Wi-Fi signal strength at the appliance location is appropriate, by accessing the SC Scan menu and inspecting the signal strength of the network you are attempting to connect.

Exceed Wi-Fi activation time

The Wi-Fi module must be activated within 60 minutes after plug in the appliance to the power supply.

- ▶ Unplug the appliance from the power supply.
- ▶ Repeat Wi-Fi activation process, see section 6 "Wi-Fi module activation".

Wi-Fi module disconnected from HMI

If it’s not possible to configure Wi-Fi menus:

- ▶ Unplug the appliance from the power supply.
- ▶ Remove the front cover, see fig. 4, page 7.
- ▶ Confirm that Wi-Fi module is correctly installed in the HMI.
  Wi-Fi module is located on the back side of HMI.

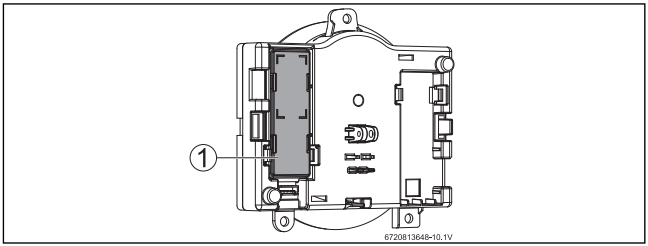

Fig. 10 Wi-Fi module installed in HMI

[1] Wi-Fi module

9 FCC Regulatory notices

Modification statement

Bosch Termotecnologia S.A has not approved any changes or modifications to this device by the user. Any changes or modifications could void the user's authority to operate the equipment.

Interference statement

This device complies with Part 15 of the FCC Rules and Industry Canada licence-exempt RSS standard(s). Operation is subject to the following two conditions: (1) this device may not cause interference, and (2) this device must accept any interference, including interference that may cause undesired operation of the device.

Wireless notice

This device complies with FCC radiation exposure limits set forth for an uncontrolled environment and meets the FCC radio frequency (RF) Exposure Guidelines and RSS-102 of the ISED radio frequency (RF) Exposure rules. This transmitter must not be co-located or operating in conjunction with any other antenna or transmitter. This device needs to be installed and used on distance greater than 20cm from human body.

FCC Class B digital device notice

This equipment has been tested and found to comply with the limits for a Class B digital device, pursuant to part 15 of the FCC Rules.
These limits are designed to provide reasonable protection against harmful interference in a residential installation. This equipment generates, uses and can radiate radio frequency energy and, if not installed and used in accordance with the instructions, may cause harmful interference to radio communications. However, there is no guarantee that interference will not occur in a particular installation.
If this equipment does cause harmful interference to radio or television reception, which can be determined by turning the equipment off and on, the user is encouraged to try to correct the interference by one or more of the following measures:

- Reorient or relocate the receiving antenna.

- Increase the separation between the equipment and receiver.
- Connect the equipment into an outlet on a circuit different from that to which the receiver is connected.
- Consult the dealer or an experienced radio/TV technician for help

United States and Canada
Bosch Thermotechnology Corp.
50 Wentworth Avenue
Londonderry, NH 03053
Tel. 603-552-1100
Fax 603-965-7581
www.bosch-climate.us
U.S.A.

Products manufactured by
Bosch Thermotechnik GmbH
Junkersstrasse 20-24
D-73249 Wernau
www.bosch-thermotechnology.com

Bosch Thermotechnology Corp. reserves the right to make changes without notice due to continuing engineering and technological advances.