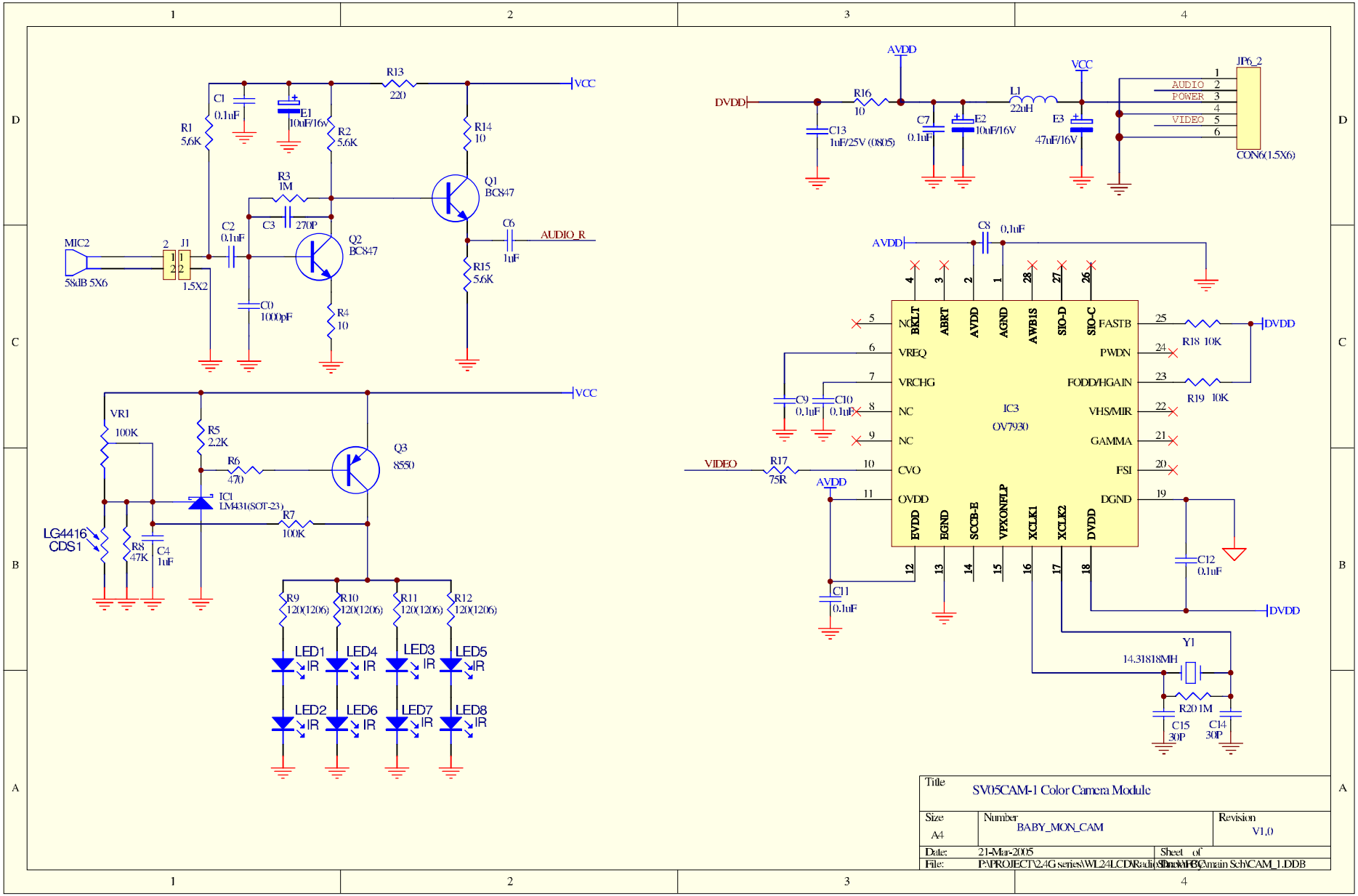
VCC
R13
220
C1
0.1uF
E1
10uF/16v
R1
5.6K
R2
5.6K
R14
10
R3
1M
C3
270P
Q1
BC847
C2
0.1uF
Q2
BC847
C6
1uF
AUDIO_R
MIC2
58dB 5X6
J1
1.5X2
R15
5.6K
C0
1000pF
R4
10
VR1
100K
R5
2.2K
R6
470
Q3
8550
IC1
LM431(SOT-23)
R7
100K
LG4416
CDS1
R8
47K
C4
1uF
R9
120(1206)
R10
120(1206)
R11
120(1206)
R12
120(1206)
LED1
LED2
LED3
LED4
LED5
LED6
LED7
LED8
IR
AVDD
DVDD
R16
10
C13
1uF/25V (0805)
C7
0.1uF
E2
10uF/16V
L1
22uH
E3
47uF/16V
JP6_2
AUDIO
POWER
VIDEO
CON6(1.5X6)
C8
0.1uF
IC3
OV7930
NC
BKLT
ABRT
AVDD
AGND
AWB1S
SIO-D
SIO-C
FASTB
VREQ
PWDN
VRCHG
FODD/HGAIN
VHS/MIR
CVO
GAMMA
FSI
OVDD
DGND
EVDD
EGND
SCCB-E
VPXONFLP
XCLK1
XCLK2
DVDD
R18 10K
R19 10K
C9
0.1uF
C10
0.1uF
VIDEO
R17
75R
C11
0.1uF
C12
0.1uF
Y1
14.31818MH
R20 1M
C15
30P
C14
30P
Title
SV05CAM-1 Color Camera Module
Size
A4
Number
BABY_MON_CAM
Revision
V1.0
Date:
21-Mar-2005
Sheet of
File:
P:\PROJECT\2.4G series\WL24LCD\Radio\Sheet\HBC\main Sch\CAM_1.DDB

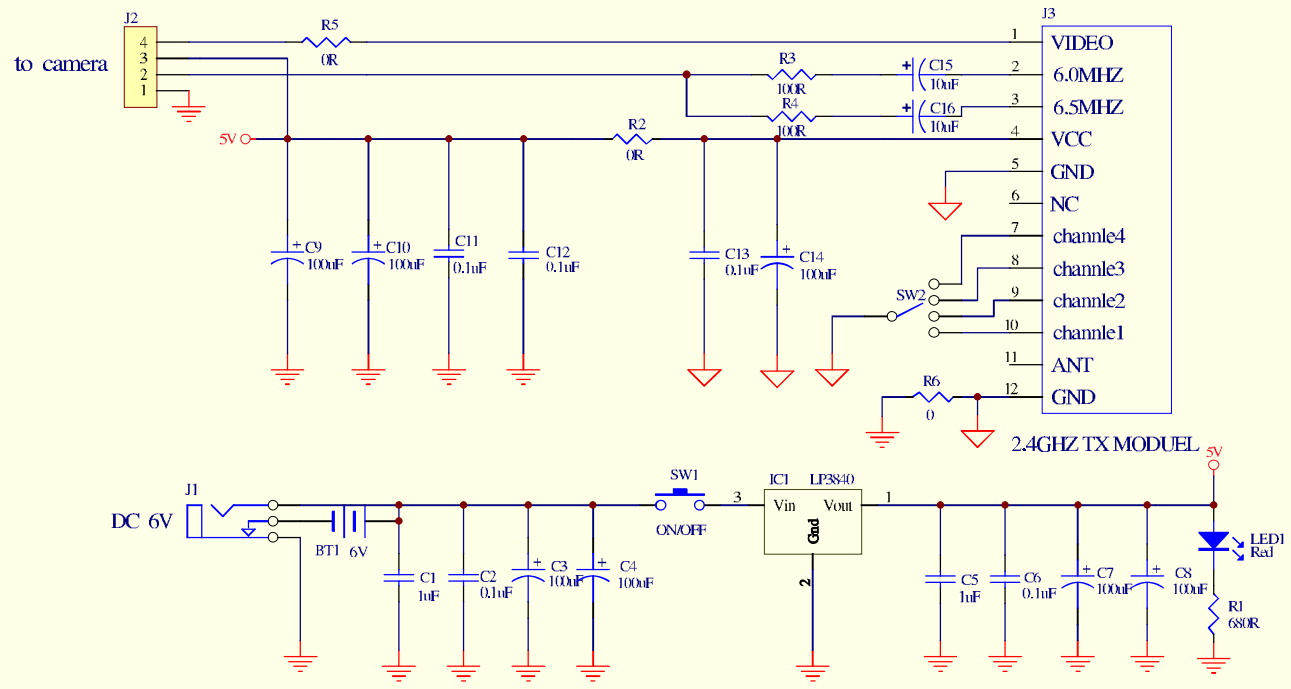

Title	SV05CAM-1 Main board		
Size A4	Number		Revision
Date:	21-Mar-2005	Sheet of	
File:	P:\PROJECT\2.4G series\WL24LCD\Radio\Main Sch\CAM_2.DDB		

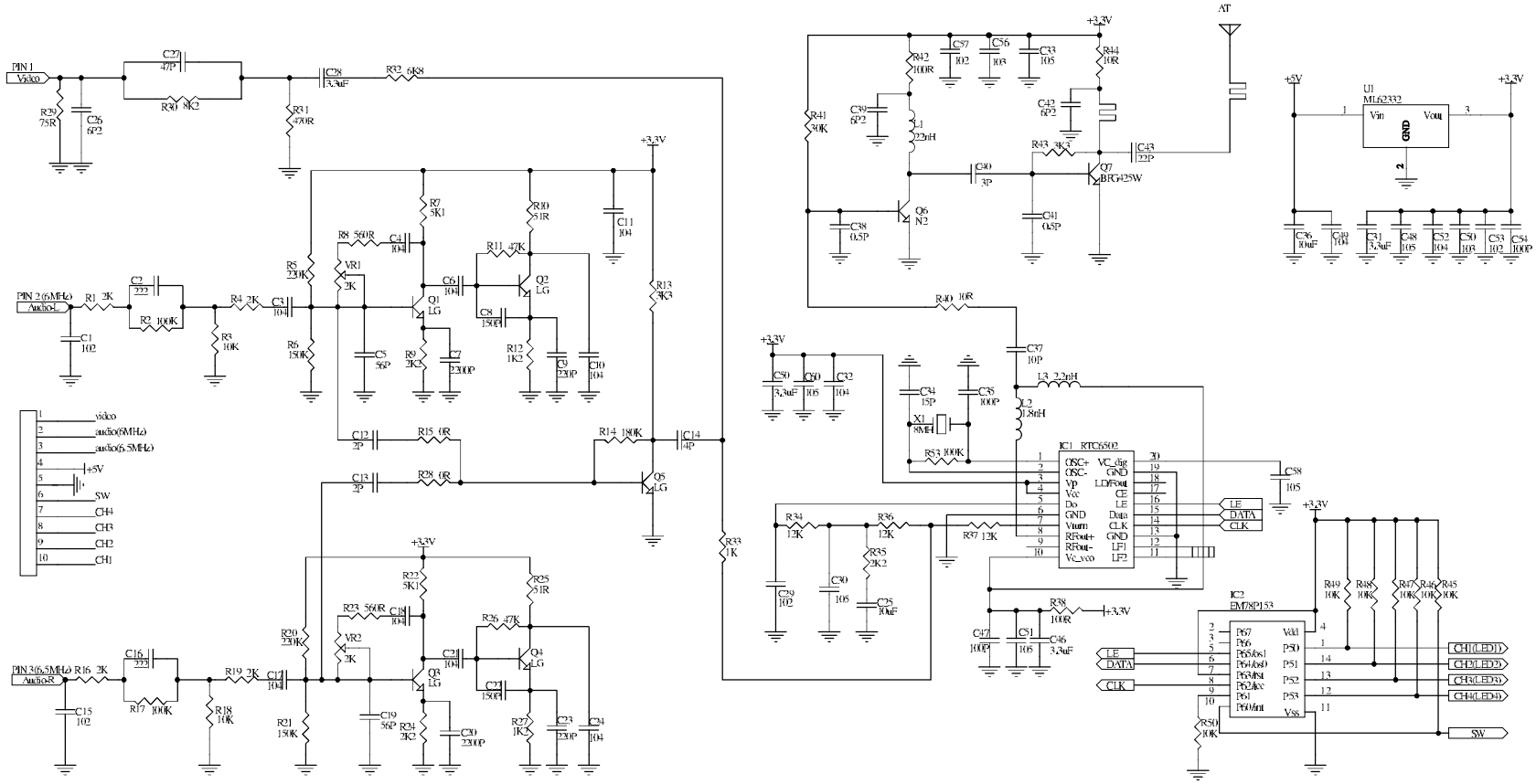
PIN 1
Video
PIN 2 (6MHz)
Audio-L
PIN 3(6.5MHz)
Audio-R
video
audio(6MHz)
audio(6.5MHz)
+5V
SW
CH4
CH3
CH2
CH1
+3.3V
AT
U1
ML62332
Vin
Vout
GND
IC1 RTC6502
OSC+
OSC-
Vp
Vcc
Do
GND
Vturn
RFout+
RFout-
Vc_vco
VC_dig
GND
LDFout
CE
LE
Data
CLK
GND
LF1
LF2
LE
DATA
CLK
IC2
EM78P153
Pf7
Pf6
Pf5/Sos1
Pf4/Sos0
Pf3/Mst
Pf2/Acc
Pf1
Pf0/Int
Vdd
P50
P51
P52
P53
Vss
CH1(LED1)
CH2(LED2)
CH3(LED3)
CH4(LED4)
SW