INSTALLATION OF CAMERA

OPTION #1 – Permanent Wall Mount

STEP 1:

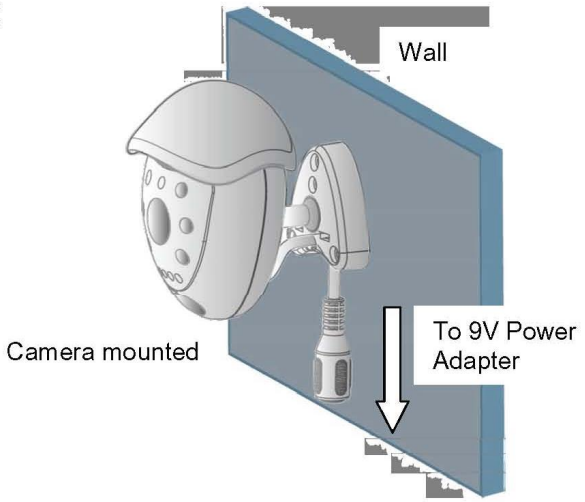

1. Attach the stand base to the wall or ceiling where you want to install the camera. Locate a wall stud or ceiling, and secure the bracket using the three supplied screws.

2. Secure the camera to the bracket by sliding the camera socket over the stand, and fasten it in place with the supplied screw.

3. Connect the supplied 9V DC adapter to the DC IN jack at the rear of the camera, and plug it into an electrical outlet. Make sure the adapter connected to the camera is labeled camera. You can turn the camera ON/OFF by holding the Channel for 3 seconds.

OPTION #2 – Temporary Mounting

1. Connect the clip-on stand onto any object.

INSTALLATION OF RECEIVER

CONNECTING THE RECEIVER TO A TV

STEP 2:

You have two options to connect the Receiver: A) Using RCA Cables (see below), or B) Coaxial Cables, please refer to page 7 of this manual.

A)

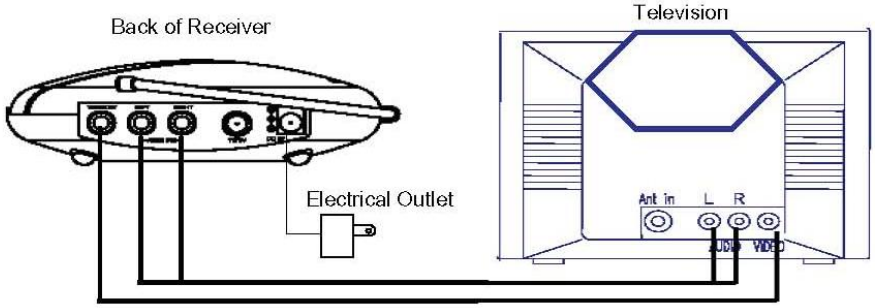

NOTE Ensure the Power Switch on the Receiver is turned OFF before proceeding with the following steps.

1. Place the wireless receiver near your television (or monitor).

2. Connect one end of the RCA cables to the Audio/Video output jacks at the back of the receiver. Plug the other end of RCA cables into the Audio/Video In jacks on your television. Be sure the yellow, red and white plugs match the yellow, red and white jacks on both the receiver and TV.

3. Connect one end of the supplied 9V AC adapter into the DC IN jack at the back of the receiver; the other end into an electrical outlet. Turn the receiver ON. The system is defaulted to channel 1.

4. Turn your TV to AX (Aux. Mode or TV/Video) to view the camera picture on your TV.

5. Adjust the antenna on the receiver if necessary for optimum viewing.

NOTE For optimum viewing reception you may need to change the channels of both your camera and receiver to the same channels between CH 1 – CH 4

INSTALLATION OF RECEIVER

CONNECTING A RECEIVER TO A TV USING COAXIAL CABLES

B)

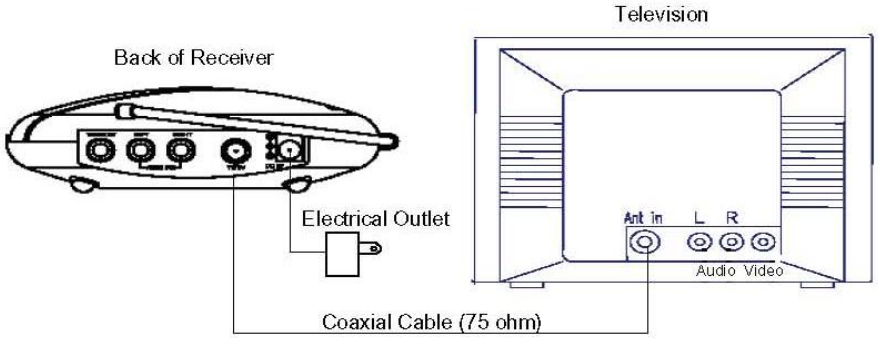

NOTE Ensure the Power Switch on the receiver is turned OFF prior to proceeding with the following steps.

1. Place the wireless receiver near your television (or monitor).
2. Connect one end of the coaxial cable to the back of the receiver. Plug the other end of the coaxial cable to the television.
3. Connect one end of the supplied 9V AC adapter into the DC IN jack at the back of the receiver; the other end into an electrical outlet. Turn the receiver ON. The system is defaulted to channel 1.
4. Turn your TV to channel 3 to view the picture.
5. Adjust the antenna on the receiver if necessary for optimum viewing.

NOTE For optimum viewing reception you may need to change the channels of your camera and receiver to the same channels between CH1 – CH 4

SYSTEM OPERATION

CONNECTING MORE CAMERAS TO YOUR SYSTEM (MAX. OF 4)

When connecting additional cameras to this system, ensure the camera is set to a different channel. Use the Channel Selector button to navigate between channels.

AUTO SCANNING - WHEN UTILIZING MORE THAN 1 CAMERA

The video security system provides you with the option to automatically scan/switch between four camera locations. If you are utilizing less than four cameras, you can also set the system to scan only within two or three locations.

Setting Auto Scan to 2 or 3 camera locations:

1. Press and hold the Auto/Manual button for more than 2 seconds. All four LED lights on the front of the receiver will turn ON. Releasing the Auto/Manual button to remain in the four channel switching option.

2. Continue to press and hold the Auto/Manual button. The Channel 4 LED button will turn off. The system is now set to scan between three camera locations (Channel 1-3).

3. Continue to press and hold the Auto/Manual button. The Channel 3 LED button will now be turned off. The system is now set to scan between two camera locations (Channel 1-2).

4. Continue to press and hold the Auto/Manual button to return to the four camera viewing option (all four LED lights will be illuminated).

SYSTEM OPERATION

AUTO AND MANUAL VIEWING OPTIONS

This system is preset to the Manual mode. In Auto mode, the LED light will turn ON.

To manually view a specific camera location, set the system to Manual and press the Ch. Select key to view the desired camera location. Auto Mode is used when more than 1 camera is connected to the system.

Set the Auto/Manual button to Auto Mode in order to have the system automatically rotate between camera locations.

SELECTABLE DWELL SETTING

Dwell Setting is the time duration between each camera view in the auto sequence mode

This system provides you with three selectable dwell options (2, 5 and 10 seconds) when the system is set to Auto Mode. This system is preset to a 2 second selection.

Changing Dwell Time

1. Press and hold the CH Select button. The LED button will turn on to indicate that it is set to 2 seconds.
2. Continue to press and hold the CH Select button. The LED button will flash at a one second interval to indicate that it is now set to the 5 second setting.
3. Continue to press and hold the CH Select button. The LED button will flash three times to indicate it is set to the 10 second setting.

TROUBLESHOOTING

If the system does not function properly, check the following points before contacting the service center.

Problems	Causes & Remedies	
	Camera	Receiver/Transmitter
No power (no picture/sound)	- AC adapter not plugged in - Power not turned ON (press and hold the Channel button for 3 seconds)	- AC adapter not plugged in - Power switch not turned on - TV or Monitor not turned on - Improper A/V or coaxial cable connection
Poor Reception	- AC adapter not plugged in	- Adjust antenna direction - Improper channel
Picture flickering **Picture too bright or too dark**	- Strong spot light in the field of view - Lighting source in the field of view	- Adjust brightness control on TV/monitor
Picture rolls and jumps or scrambled picture		- Adjust antenna direction

TECHNICAL SPECIFICATIONS

WIRELESS CAMERA

Image sensor	Color CMOS
Lens	3.6mm
Scanning system	2:1 interlace
Scanning frequency	15.734 KHz(H) 59.94Hz (V)
Sync. system	Internal Negative synchronization
Resolution	330 Lines
Min. illuminations	3 Lux @ F2.0 (without IR LED)
Video Output	1.0Vp-p/75 Ohm
Gamma characteristics	r=0.45
Auto Iris	Electrical Auto Iris Shutter sensitivity :1/60-1/6,000
Microphone	Electrronic Condenser
Transmitting frequency	2.4 GHz-2.473 GHz (4Ch)
Modulation	FM
Video Output level	1.0Vp-p/75 Ohm
Antenna	Internal
Operating temperature	-14º to + 122º F (-10ºC to + 50 ºC)
Power source	9V DC Adapter
Dimensions	2.5"x 1.5" x 3.5"
Weight	136 grams or 4.8 oz

WIRELESS RECEIVER

Receiving frequency	2.411GHz - 2.473GHz (4CH)
Antenna	Dipole antenna
Operating temperature	-14º to + 122º F or (-10ºC to + 50 ºC)
Power source	9V DC Adapter
Dimensions	5.25"(Diameter) x 1.5" (Height)
Weight	181 grams or 6.4 Oz

CARE AND MAINTENANCE:

Please follow these instructions to ensure proper care and maintenance of this system

Keep your monitor and camera dry. If it gets wet, wipe it dry immediately.

Use and store your unit in normal temperature environment. Extreme temperatures can shorten the life of the electronic devices.

Handle the monitor carefully. Dropping it can cause serious damage to the unit.

Occasionally clean the unit with a damp cloth to keep it looking new. Do not use harsh chemicals, cleaning solvents or strong detergents to clean the unit.

Keep the unit away from excessive dirt and dust. It can cause premature wear of parts.

FCC Information

This device complies with part 15 of the FCC Rules, Operation is subject to the following two conditions: (1)This device may not cause harmful interference, and (2) This device must accept any interference received, including interference that may cause undesired operation.

CAUTION: Changes or modifications not expressly approved by Summer infant may void the users authority to operate this equipment.

NOTE: This equipment has been tested and found to comply with the limits for a Class B digital device, pursuant to part15 of the FCC Rules.

These limits are designed to provide reasonable protection against harmful interference in a residential installation. This equipment generates, uses and can radiate radio frequency energy and, if not installed and used in accordance with the instructions, may cause harmful interference to radio communications, However, there is no guarantee that interference will not occur in a particular installation. If this equipment does cause harmful interference to radio or television reception, which can be determined by turning the equipment off and on, the user is encouraged to try to correct the interference by one or more of the following measures:

- Reorient or relocate the receiving antenna
- Increase the separation between the equipment and the receiver
- Consult the dealer or an experienced radio / TV technician for help.