Circle Communication Products, Inc

5.8GHz Multi-line and Multi-handset Cordless Telephone System

Desktop Extension
(WDE)

User Guide

Version 2.10

This page is intentionally left blank

Table of Contents

1. INTRODUCTION 5

WELCOME 5
BEFORE USING 5
FEATURE HIGHLIGHTS 6

2. KEY REFERENCE GUIDE 7

FRONT VIEW 7
BACK AND SIDE VIEW 8

3. DISPLAY 9

LCD DISPLAY 9
NAME INPUT 9
SOFT KEYS 10

4. GETTING STARTED 11

PACKAGE CONTENT 11
INSTALLATION 11
CHARGING THE BATTERY 13

5. REGISTRATION 14

6. MENU LIST 15

7. USING THE PHONE 17

OUTGOING CALL 17
INTERCOM CALL 17
PRE-DIALING 17
RECEIVING INCOMING CALL 17
RECEIVING INTERCOM CALL 17
REDIAL 18
MUTE 18

8. FEATURE OPERATION 19

AUTO ATTENDANCE 19
AUTOMATIC CALL BACK 19
CALL FORWARD 19
CALL HOLD 20
CALL HOLD, EXCLUSIVE 20
CALL PAGING 21
CALL PICKUP 21
CALL TRANSFER 21
CALL TRANSFER (MAIL BOX) 21
CALLER DISPLAY 21
CLOCK MODE 22
CONFERENCE 22
DATE & TIME 22
DEDICATED LINE 23
DIRECTORY (DIR) 23
DO NOT DISTURB (DND) 23
HEADSET 23
INDICATION LAMP 24
INTERCOM 24
KEY SOUND 24
LCD CONTRAST 24
LINE FLASH 24
MAKE TOLL CALL 25
MEMO RECORDING 25

MUTE 25
NIGHT MODE 26
PHONE BOOK: COMMON STORE 26
PHONE BOOK – PERSONAL STORE 26
REDIAL 27
RING TONE AND VOLUME – LINE / INTERCOM 27
SPEAKER 28
USER NAME 28
VOICE MAIL 28

9. IMPORTANT SAFETY INSTRUCTION 30

10. SPECIFICATION 32

HARDWARE SPECIFICATION 32
OPERATING CONDITIONS: 32

11. LIMITED WARRANTY 33

12. IMPORTANT CONSUMER INFORMATION 36

1. Introduction

Welcome

Thank you for choosing the Cordless Desktop Extension (WDE). To enjoy the full benefits and features and to use the product safely, please read and follow all the instructions in this user guide.

Before Using

The Cordless Desktop Extension (WDE) cannot be used by itself. It is part of a cordless telephone system. All the cordless extensions require connection to the wireless Main Control Base (WMC). A maximum of 10 Extensions in any combination of cordless desktop (WDE) and cordless handheld (WHE) units can interface with the WMC. The only requirement is that the first unit connected be extension “0” which is used for the system configuration. For your convenience, the desktop unit is set as extension 0 and the two handheld units are set as extensions 1 & 2 respectively in the complete system package.

The Desktop Extension can be used with the AC adaptor supplied to connect the unit to a power outlet (AC power mode). When you want to use the extension away from a power outlet, a rechargeable battery included with the unit will supply the required power (Battery power mode). You need to install the battery and remember to charge it for about **8 hours** before initial use.

Before choosing a location for your new phone, read “Installation Consideration” in the System configuration guide and follow the installation procedures.

To utilize the Caller ID Display, you will need to subscribe to the service with your local telephone company.

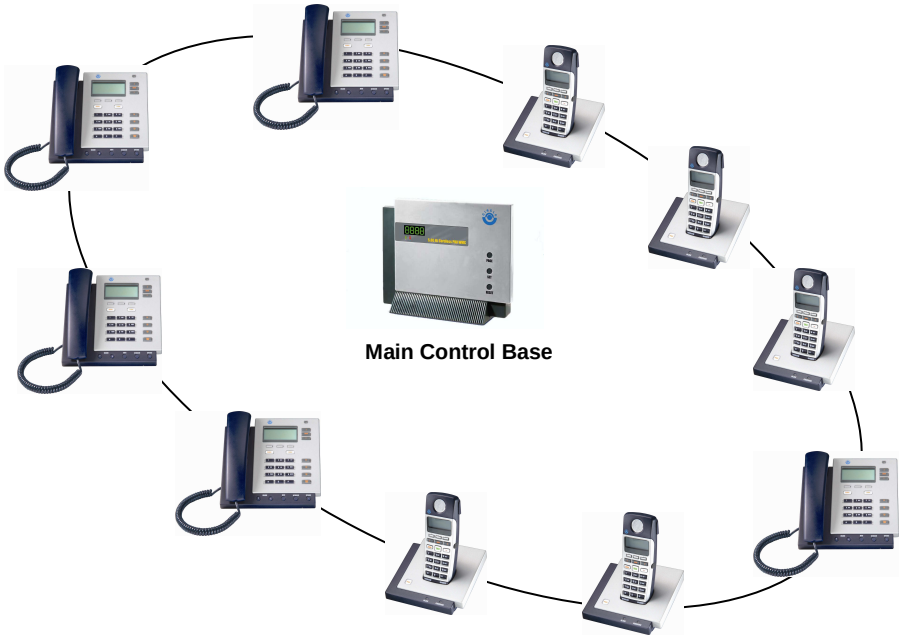

Feature Highlights

- Ergonomic design with comfortable handset
- Speaker Phone
- Message waiting indicator lamp
- 3 tilt angle selection and wall mount
- Direct button for telephone line selection and voice mail access
- Extra large alpha numeric display

2. Key Reference Guide

Front View

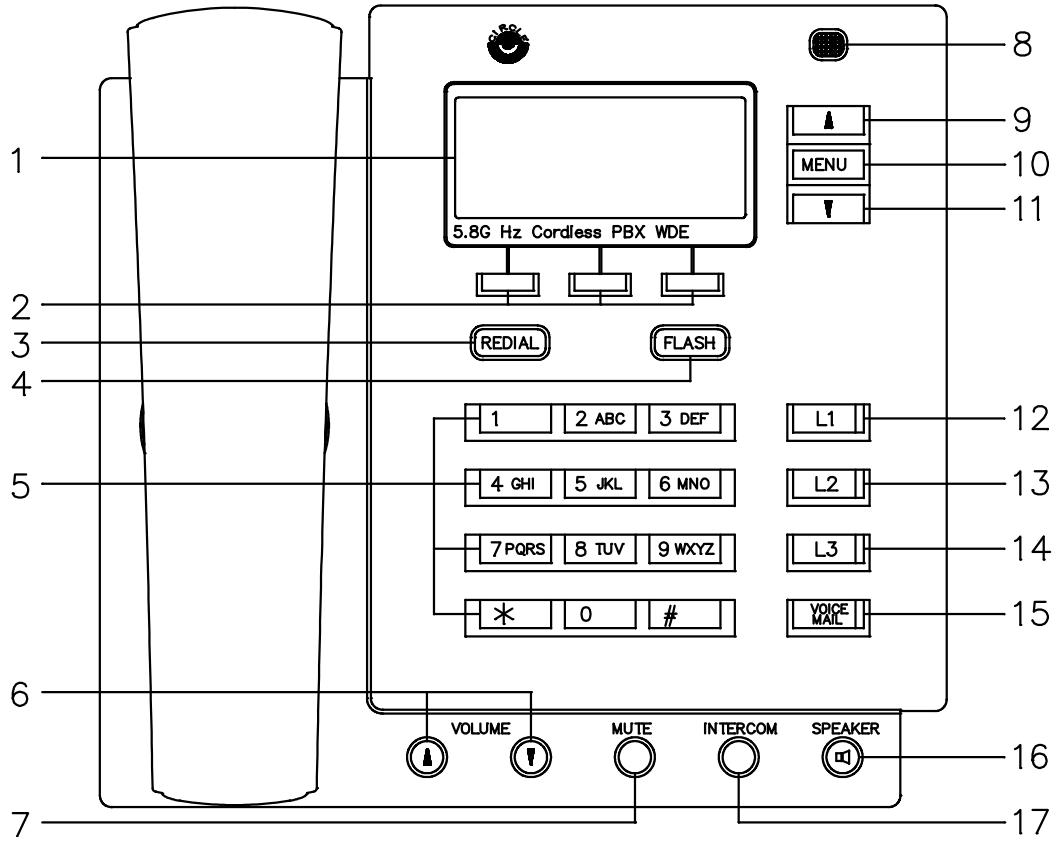

Item	Key Description	Functionality
1	LCD Display	Shows date, time, owner name, message waiting indicator, software menu features
2	Three Soft Key	Selects Soft menu features
3	REDIAL	Last number redial
4	FLASH	Activates the special features provided by your telephone company
5	Dial Keypad	Enters Phone number and Alpha characters
6	VOLUME	Adjusts handset/speaker/ringer volume
7	MUTE	Stops receiving voice during conversation
8	Indication Lamp	Indicates incoming calls and message
9	▲ (Up) Key	Moves the position of the cursor, scrolls displaying in soft menu
10	MENU	Starts soft menu feature activation, exit soft menu and return the phone to idle mode
11	▼ (Down) Key	Moves the position of the cursor, scrolls displaying in soft menu
12	LI	Indicates L1 telephone line status and one touch direct selection of line

Item	Key Description	Functionality
13	L2	Indicates L2 telephone line status and one touch direct selection of line
14	L3	Indicates L3 telephone line status and one touch direct selection of line
15	VOICE MAIL	Calls to voice mail system, message waiting light
16	SPEAKER	Changes the phone to hands free speaker mode, activates a call when the user has input a phone number
17	INTERCOM	Call to extension with extension number

Back and Side View

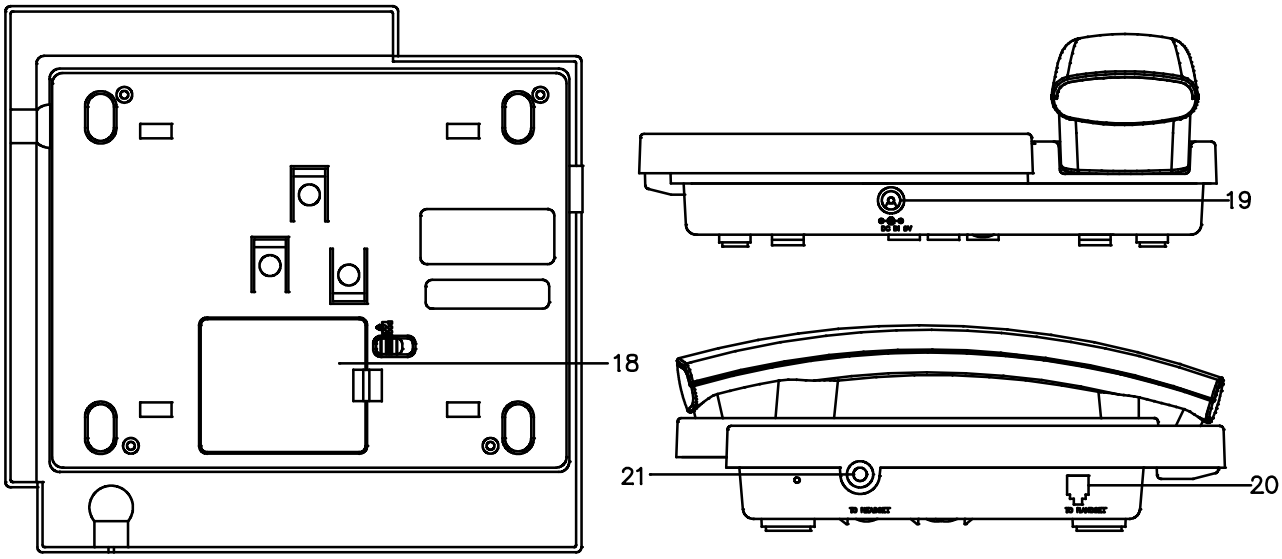

Item	Key Description	Functionality
18	Battery Cover (3.6V Battery)	Allows replacement of batteries
19	DC 9V Input	Connects AC adaptor power source
20	Handset Cord Input	Connects handset
21	Headset Jack Input	Connects headset

3. Display

LCD display

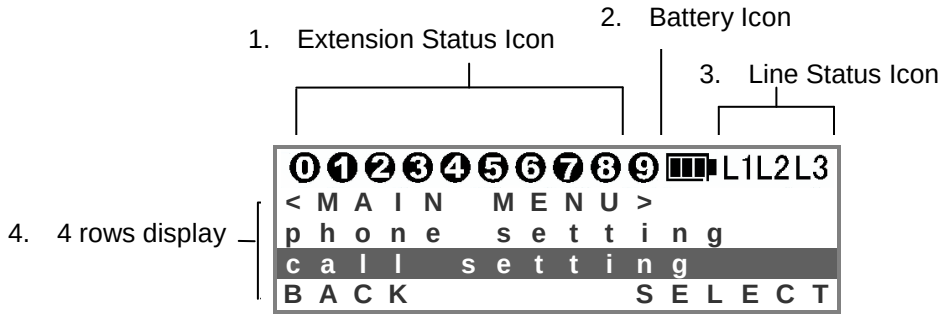

1.	Extension Status icons functions as follows: • Off (invisible) The extension is idle. • ON (visible) The extension is engaged.
2.	Battery Icon indicates the battery strength.
3.	Line Status icons functions as follows: • Off (invisible) The line is free. • ON (visible) The line is being used. • Flashing: A call is on hold.
4.	The display shows the date, time and the dialed number, menu configuration options and phone book items. If you subscribe to a Caller ID service, the caller ID information will be displayed. The fourth line shows the soft key bar. You can press the corresponding soft key for the feature as shown below.

Name Input

To edit the name field, numeric keys are used for both English characters (Upper case only) and digits. The following table illustrates how to input a desired character:

Key	First Press	Second Press	Third Press	Fourth Press	Fifth Press
0	0	0	0	0	0
1	Space	—	*	1	Space
2	A	B	C	2	A
3	D	E	F	3	D
4	G	H	I	4	G
5	J	K	L	5	J
6	M	N	O	6	M
7	P	Q	R	S	7
8	T	U	V	8	T
9	W	X	Y	Z	9
*	Reserved	-	-	-	-
#	Reserved	-	-	-	-

Soft Keys

Key	Description
AA	Auto Attendant
BACK	Back to previous screen
CAMP	Camp a line or extension that is busy or occupied
CLEAR	Clear all entry and back to previous screen
CONF	Conference Call
DEL	Clear the digit entry
DIAL	Select to make a call
DIR	Directory (Phone Book)
DEFAULT	Return to default value
DND	Do not disturb, incoming call transfer to extension 0
HOLD	Hold the line
IN	Incoming Call History List (max. 20 records)
MISS	Missed Call History List (max. 20 records)
OK	Confirm to message
OUT	Outgoing Call History List (max. 10 records)
PAGE	Make a voice announcement
PAUSE	Insert the pause time in the phone number when required
PICK	Call pickup
PLAY	Play back the recording
QUIT	Quit the MENU
REC	Record the conversation
SAVE	Save the data entered (e.g. phone numbers in the phone book)
SET	Set condition
SELECT	Select the desired item highlighted in the Menu list
STOP	Stop the function or continue, e.g. stop recording
TXFR	Transfer Call to other extension
TXVM	Transfer the call to Voice Mail
UNCAMP	Remove the Camp function

4. Getting Started

Package Content

The full package of WDE includes the following items:

1. WDE phone body
2. Handset
3. Handset cord
4. Stand / Wall mount
5. AC Adaptor
6. Battery
7. WDE user guide

Installation

1. Plug the end of the handset cord into the jack with a handset icon at the base of the phone and the other end into the jack on the end of the handset. Position the cord through the channel as shown.

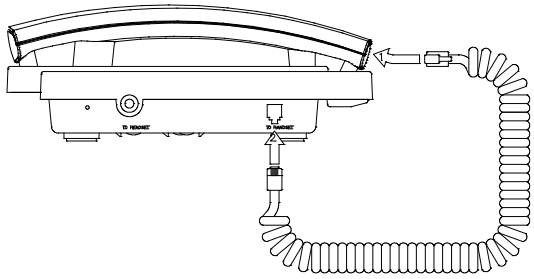

2. Turn the phone back and insert the tip of the AC adaptor into the slot labeled DC 9V at the base of the phone. Make sure that the tip is all the way in.

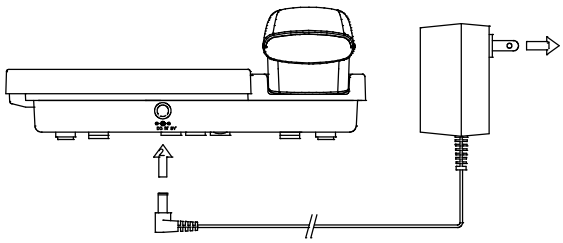

3. Open the battery door cover (1&2). Insert the 3.6 V rechargeable battery plug to connector and put it in the box (3 & 4). Close the battery door afterwards (5 & 6).

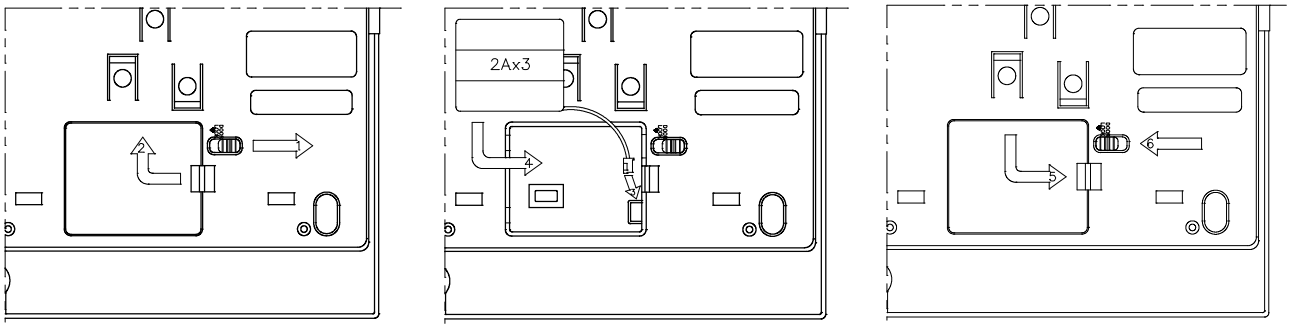

4. The phone is powered by the battery or DC supply. In 5 seconds, you will see that the phone completes its setup and displays the idle mode.

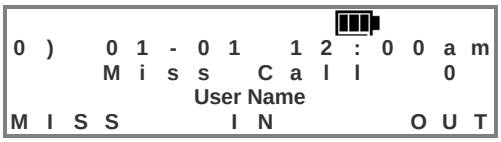

5. 3 Tilt angle selection and wall mount:

You can choose one of the positions that is most convenient and proceed with set-up.

a. Flat on table without wall mount stand

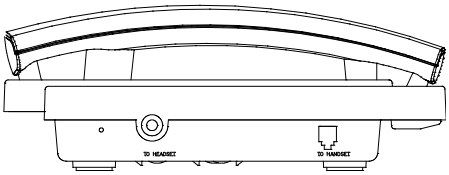

b. Low angle with wall mount stand

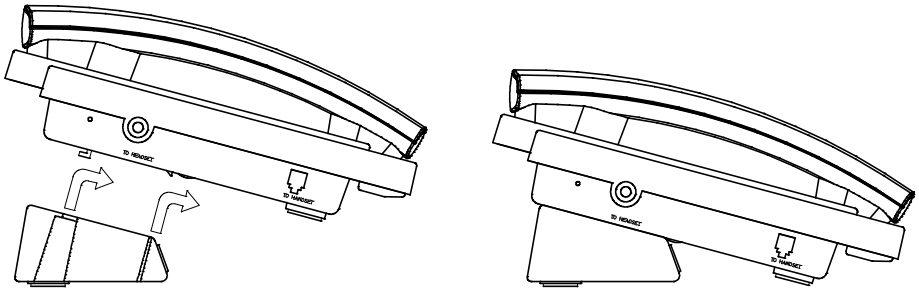

c. High angle with wall mount stand

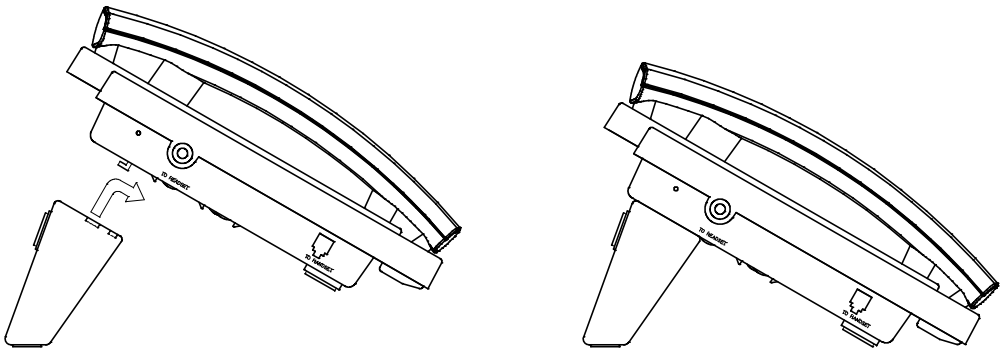

d. Wall mount

i. Wall mount hook: take out the wall mount hook and turn it up-side down, then insert back to the slot.

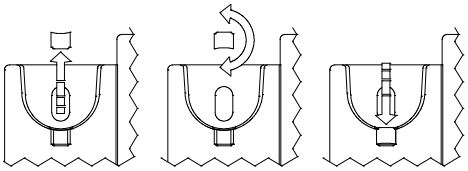

ii. Wall mount stand: hook the stand on the back of telephone and mount on the wall

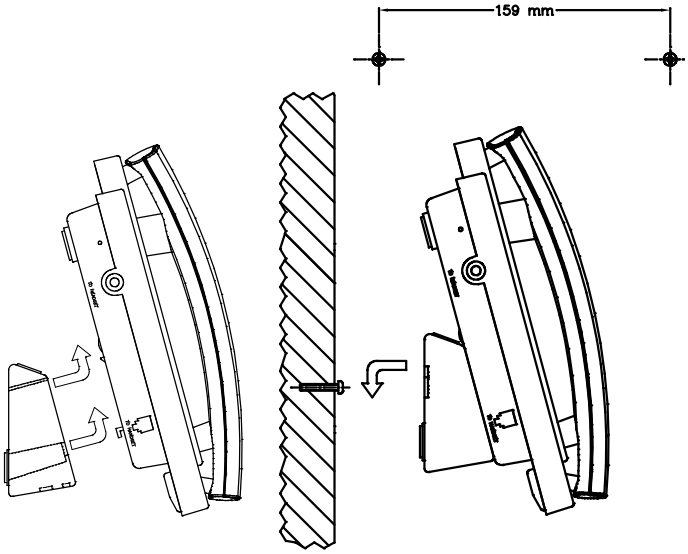

6. The best location for noise free operation:

Move away from any microwave oven and locate the extension near the MAIN CONTROL.

Move away from other cordless phones base unit.

Charging the Battery

Before initial use, the battery should be charged for about 8 hours. When possible, keep the extension in the AC power mode to provided optimum battery performance.

A fully charged Battery can provide:

- 6 hours continuous use in non speaker mode
- 80 hours standby mode

Recharge:
Connect the AC adaptor to the extension when “ ” appears on the display

Note:
The battery cannot be overcharge.
When you charge the battery, you can feel that it is warm. This is normal.
The battery operating time may be shortened depending on usage conditions and ambient temperature.

5. Registration

When the extension is not registered to the main control base, it shows ‘Unregister.Handset’ You have to register all extensions to the Main Control base.

```
/ )   0 1 - 0 1   0 0 : 0 0 A M
U N R E G I S T E R
H A N D S E T ! ! !
```

Whenever you want to change an extension number, you have to repeat the same registration procedure.

You first press the MENU key of your extension, scroll the ▲ up or ▼ down key to select “register” and press the soft key SELECT to confirm.

```
< M A I N   M E N U >
c a l l   h i s t o r y
r e g i s t e r
B A C K           S E L E C T
```

Then select “register” from the sub menu by using the scroll key and press soft key SELECT to confirm.

```
< R E G I S T E R >
r e g i s t e r
u n r e g i s t e r
B A C K           S E L E C T
```

Press the soft key OK for “REALLY REGISTER?”

```
< R E G I S T E R >
R E A L L Y
R E G I S T E R ?
Q U I T                   O K
```

Input EXT NO 0-9. Example : press the dial key ‘**3**’ and then press soft key OK to confirm.

```
< R E G I S T E R >
I N P U T   E X T   N O   0 - 9
3
Q U I T                   O K
```

After assigning the extension number, press the “SET” button on the Main Control Unit with a beep sound.

```
< R E G I S T E R >
P R E S S   B A S E   S E T
W A I T   F O R   B E E P
Q U I T
```

Press the soft key OK to confirm the registration on the extension. Only one unit can be registered at a time using the main control unit.

```
< R E G I S T E R >
C O N F I R M
R E G I S T R A T I O N ?
Q U I T                   O K
```

If you press QUIT during registration, the extension will fail to register.

Set User name: Continue to enter a name by pressing the dial keypad and press the soft key OK when finish.

```
< R E G I S T E R   N A M E >
E n t e r   N a m e
B O
C L E A R       D E L     O K
```

Make sure that the main control base and the extension are in standby mode. Registration must be completed within one minute.
For convenience, the desktop extension is set as extension 0 and the other two handheld extensions are set as extension 1 & 2 respectively in the complete system package. When additional extensions are required, you can register them as above from extension 3 to 9 without duplication.

6. Menu List

You can customize your unit according to your needs in the following Menu list. After pressing the MENU key, the LCD displays the main menu. You can scroll ▲ (up) or ▼ (down) key to view the list. You can highlight the item you need and press the soft key SELECT to select. The LCD displays sub-menu for subsequent setting or data input.

Voice Mail

- Voice Prompt
- Recording
  - Memo
  - Personal Greeting
  - Name
- Browse Mode
  - All
  - New Memo
  - All Memo
  - New Voice Mail (**i**n**c**oming **m**essage "**ICM**")
  - All Voice Mail
  - Filter
  - Personal Greeting (**o**ut**g**oing **m**essage "**OGM**")
  - Name
- Password

Phone Setting

- Key Sound (off / on)
- Ringer
  - Line Ring VOL (level from 0 to 31)
  - Line Ring Tone (select 0 to 6)
  - INTERCOM Ring VOL (level from 0 to 31)
  - INTERCOM Ring Tone (select 0 to 6)
- LCD contrast (level from 0-63)
- Headset mode (off / on)

Call Setting

- Call Forward
  - Off
  - On (1. immediately 2. busy 3. no answer 4. busy & no answer)
    - Voice Mail
    - Extension (Ext No. 0-9 except user's extension)
    - Line (Input the forward telephone number when intercom call)
- Make Toll Call
  - Toll Call restrict number and password to make a toll call
- Day/Night Mode (allows to set when Advance Setup-Day/Night mode is enabled)

Phone Book

- Personal store
  - Browse (SELECT (01-50) shows the record no., name & telephone no. It shows empty if no data. When the record is selected, you can make call, edit or delete.
  - Add (Input name & Telephone number)
  - Upload (to the Main Control Base)
  - Download (from the Main Control Base)
  - Del All Entry (Delete all really?)

- Status

Common Store (Allows ‘Add and Delete’ set at extension 0 or Computer)

- Browse (SELECT (01-16) shows the record no., name & telephone no. It shows empty if no data. When the record is selected, you can make call,
- Add (Input name & Telephone number)
- Upload (to the Main Control Base)
- Download (from the Main Control Base)
- Del All Entry (Delete all really?)
- Status

Call History

In Call (Incoming Call)
Miss Call (Incoming miss Call)
Out call (Outgoing Call)

Register

Register
Unregister
Set User name

System Configuration (Allows set at extension 0 or Computer)

Basic Setup

- Time Setting
  - Set time & date
  - Set time format
  - Set date format
  - Daylight saving
  - CID update
- Outgoing Call (Ext can make outgoing call)
- Incoming Call (Ext will ring for the incoming call)
- Tone & Pulse
- Password

Advance Setup

- Day / Night Mode (manual / automatic)
- Line Mode (normal, line out only, call distribute, line disable)
- line to line
- ACD options (longest idle / circular)
- Restrict Toll (restricted extension, restricted no., toll enabled password)

Voice Mail / AA

- Voice Mail Setting (password, max record time, max message no., greeting time, sound level, silence detect, route to AA, & minimum duration)
- Auto Attendance Setting (afternoon mode, AA timeout, supervisor password)

Handset Management

- Edit User Name
- Delete Extension

Technical

- Technical Default Setting
- Call Setting (Call Auto Transfer, Hold Recall Timer)
- Technical Setting
- Restore Factory Default

End

Note : System Configuration can only operated at Extension 0 or using computer connected to the Main Control Unit via RS232

7. Using the Phone

Outgoing Call

```
                    L1
0 )   0 1 - 0 1   1 2 : 0 0 a m
1 2 3 4 5 6 7 8
T A L K - 1   0 0 : 0 2     V 1
H O L D       R E C     T X V M
```

Handset Mode: Pick up the handset and get available line, L1-L3 automatically. Or you may press the line key directly when the Line is idle. Press the phone number.

Hands Free Mode: Press the speaker key and get an available line, L1-L3 automatically. Or you may press the line key directly when the Line is idle. Press the phone number

Result LCD will display the phone number, the engaged line number, duration of the conversation and the Volume level Vx (x: 1 to 5)

Intercom Call

```
0 )   0 1 - 0 1   1 2 : 0 0 A M
I n p u t   E x t   N o .
```

Handset Mode: Pick up the handset and press the INTERCOM key. You can hear an internal dial tone. Press the extension number.

Hands Free Mode: Press the INTERCOM key and press the extension number.

Pre-dialing

```
0 )   0 1 - 0 1   1 2 : 0 0 A M
1 2 3

D E L     C L E A R   P A U S E
```

Pre-dialing allows you to input a phone number and examine it before dialing. You can input a phone number first. On the display, you can inspect the phone number and correct it by the soft key DEL. You can insert pause between digits if required. Finally, you can start the phone call by pressing speaker key and select an available line automatically If you stop the phone number input, you can press the soft key CLEAR and the phone returns to the idle mode

Receiving Incoming Call

Handset Mode: Pick up the handset when the phone is ringing.

Hands Free Mode: Press the speaker key when the phone is ringing.

Receiving Intercom Call

Handset Mode: Pick up the handset when the phone is ringing.

Hands Free Mode: Press speaker key when the phone is ringing.

Redial

The phone stores the last outgoing call's number. You can press Redial key and then press Speaker or pick up handset to select an available line to make an outgoing call by using the stored number.

Mute

Pressing the Mute key will deactivate the microphone on the phone. This turns the phone to a monitor set (listen only). Press the Mute key again to resume conversation.

8. Feature Operation

Auto Attendance

```
0 )   0 1 - 0 1   1 2 : 0 0 A M
      M i s s   C a l l     0
            User Name
```

Description: This feature is useful to back up an operator to receive an incoming call. When the operator is not available, incoming calls will be forwarded to the voice mail system. The outside caller can press the extension number of a desired extension or leave a message in extension “0” after a beep tone.

Activation: Press the soft key AA in idle mode

Result: LCD will acknowledge the setting.

```
0 )   0 1 - 0 1   1 2 : 0 0 A M
F o r w a r d   N / A
V M
P I C K       D N D         A A
```

Deactivation: Press the soft key AA again and the extension return to normal mode

Condition Extension 0 is default as the system operator.
This feature should be activated and deactivated at extension ‘0’ for the system.
When the called extension is not set to call forward to voice mail, the outside caller will leave message in extension “0”.

Automatic Call Back

```
0     4
0 )   0 1 - 0 1   1 2 : 0 0 A M
E X T   < 4 >
I C M   B U S Y           ,
```

Description: Allows the caller to be informed when the called party has completed the current call.

Activation: When the line or extension is busy, press the soft key CAMP to camp on the called party.

Result: **Automatic Call back- Extension**
If the caller answers the callback, the called extension automatically starts ringing again.
Automatic call back - Line
If the caller answers the callback, the line is automatically selected to allow the user to make a line call.

Deactivation: Press the soft key Uncamp when not required prior to the start of callback ringing.

Call Forward

```
0 )   0 1 - 0 1   1 2 : 0 0 A M
F o r w a r d   B u s y / N A
V M
```

Description: Call forwarding feature enables you to have calls forwarded to a specified destination. You may specify the circumstances under which your calls are forwarded.
1: immediately 2: Busy
3: No answer 4: Busy & No Answer

Activation: 1. Press MENU button, scroll ▲ up or ▼ down key to select

Call Setting ➔Call Forward **(On)**.

2. Scroll ▲ up or ▼ down key to select
   Voice Mail, or
   Extension number (**input ext. no.**), or
   Line number (**input telephone no**.)
3. Press condition of call forward

Result: The LCD show ‘’forward ‘ destination acknowledgement

Deactivation: Press MENU button, scroll ▲ up or ▼ down key to select Call Setting ➔Call Forward (**Off**).

Condition: Call forward to Line can be set at extension 1 – 9 for internal call, where extension 0 is set for Line to Line forward.

Call Hold

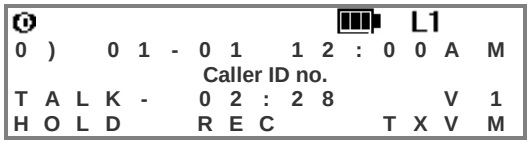

Description: You can use Call Hold to put a call on hold temporary. The held party will hear music during the holding period.

Activation:

1. During conversation, press soft key HOLD .
2. You will hear a dial tone.
3. a. To call a third party, dial the number you want to call or b. to answer another incoming line that is ringing at another extension, press the soft key PICK.
4. Switch between two parties by pressing the soft key HOLD .
5. If you want to drop the party on line and return to the party on hold, you can hang up. Your telephone rings, you lift up handset to resume conversation with the party that was on hold.

Result: The held line Button is flash

Condition: If a call on hold is not retrieved in a specified period, the system will automatically recall the extension.

Call Hold, Exclusive

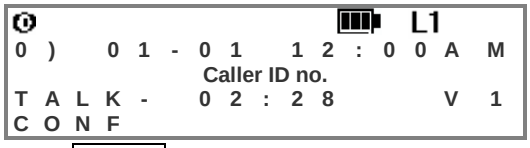

Description: You can use the soft key CONF to put a call on exclusive hold condition. The held party will hear music during holding period. The call can only be picked up again at the same extension. When time out occurs, the exclusive hold condition will change to a common hold condition and can be picked up at any extension.

Activation: During conversation, press soft key CONF .

Result: The held line Button is flash in green.

Condition: If a call on hold is not retrieved in a specified period, the system will automatically recall the extension user.

Call Paging

```
0 )   0 1 - 0 1   1 2 : 0 0 A M
      M i s s   C a l l     0
            User Name
P A G E
```

Description: Paging allows you to make a voice announcement through a PA system via the Audio Out port of the main control base.

Activation:
1. Press the soft key “PAGE” in idle mode.
2. ‘PAGING’ will appear on the LCD
3. Make a voice announcement.

Result: The LCD will show ‘Paging’ acknowledgement.

Condition It is optional. To connection the Audio Out Port to a PA system use an audio cable with a 3.5mm plug.

Call Pickup

```
0 )   0 1 - 0 1   1 2 : 0 0 A M
      M i s s   C a l l     0
            User Name
P I C K       D N D         A A
```

Description: Allows any extension user to answer an incoming line or internal call that is ringing at another extension.

Activation: Press the soft key PICK to pick up all calls

Call Transfer

```
0 )   0 1 - 0 1   1 2 : 0 0 A M
C a l l i n g   t o   :   4
```

Description: Call Transfer feature allows the user to transfer a call to another party.

Activation:
1. Press the soft key HOLD to hold the 1st party.
2. Press extension number.
3. Press the soft key TXFR to transfer call.

Result: The call transfer is completed. The LCD is in idle mode.

Condition: Only the Line call directly transfers to an extension party.

Call Transfer (Mail Box)

```
                          L1
0 )   0 1 - 0 1   1 2 : 0 0 A M
            Caller ID no.
T A L K - 1   0 2 : 2 8     V 1
```

Description: Call Transfer feature allows the user to transfer a call to another party’s mailbox.

Activation:
1. Press the soft key TXVM to hold the call.
2. Press extension number.

Result: When the call transfer is completed, the LCD is in idle mode.

Caller Display

```
                          L1
L i n e 1
1 2 3 4 5 6 7 8
c a l l e r ’ s   n a m e
```

Description: Caller’s telephone number can be viewed on display.

Activation: If the call is missed, the Indication lamp is on. You can press

the soft key MISS to view record.
You can press the soft key IN or OUT to view the call history of incoming or outgoing calls.

Result: LCD shows the caller's telephone number, time and date for miss or incoming call. Only telephone number is displayed for outgoing call.

Condition: Subscribe for the service from your local telephone company

Clock Mode

Description: Allows the extension user to set 12hr or 24hr mode in the preset time

Activation:
1. Press MENU button, scroll ▲ up or ▼ down key to select System Config.→Basic Setting→Time Setting→ Time Format.
2. Select 12hr mode or 24hr mode.

Result: The LCD will show the clock mode in the normal mode.

Condition Clock mode must be modified by using a desktop phone via **extension 0**

Conference

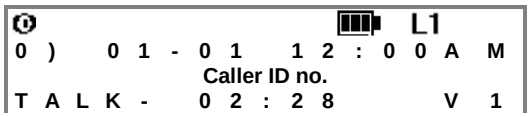

Description: The system supports three-party conference call, including external and internal parties. During a two-party conversation, the extension user can add a third party to their conversation, thereby establishing a conference.

Activation:
1. During the conversation with the 1st party, press the soft key HOLD to hold the 1st party.
2. Input Extension no. to call extension or press line Key (L1 – L3) to call outside party
3. Press the soft key CONF to conference when 2nd caller answers.

Result: The LCD display "conference' and The conference is established

Condition:
1. Either party can terminate the line.
2. Possible conference combination are: 2-insides and 1-outside; and 1-inside and 2 outside
3. One conference call at one time for the system.

Date & Time

Description: Allows the extension user to modify the Date & Time

Setup:
1. Press MENU button, scroll ▲ up or ▼ down key to select System Config→ Basic Setup→ time setting→Set time & date.

2. Enter the present date / time / day.

Result: The LCD will show the present date & time

Condition: Date and Time must be modified by using a phone via **extension 0** or PC programming at the base unit.
Date & Time can be set enable to update by incoming calls with caller ID subscribed.

Dedicated Line

```
0 1 2 3 4 5 6 7 8 9 L1L2L3
0 )   0 1 - 0 1   1 2 : 0 0 A M
      M i s s   C a l l     0
          User Name
```

Description: Allows the extension user to access a specified Line.

Activation: Press the line button L1, L2 or L3

Result: The LCD show Line Icon on if occupied

Directory (DIR)

```
0 )   0 1 - 0 1   1 2 : 0 0 A M
      M i s s   C a l l     0
          User Name
```

Description: Allows the extension user to have access to personal or common phone book.

Activation: Press the soft key DIR select common or personal phone book. Browse and select the record by scrolling ▲ Up or ▼ Down Key.

Result: The dialing number and name will display on the LCD, and then begin to dial

Do Not Disturb (DND)

```
0 )   0 1 - 0 1   1 2 : 0 0 A M
      M i s s   C a l l     0
          User Name
```

Description: Allows an extension user to transfer incoming line or extension calls to Extension 0.

Activation: Press the DND button to turn on DND.

Result: The LCD shows DND when action

Deactivation: Press the DND button again and the DND is gone out.

Headset

Description: Allows the user to use a headset.

Activation: Connect a headset with 2.5 mm plug to the headset jack. Press the MENU, use ▲ Up and ▼ Down Scroll key to select Phone Setting → headset mode (**On**).
LCD will acknowledge the setting of headset with “HS” flashing.

Condition: This is an option. When in use, incoming call ring and all conversations are only heard in the headset. The speaker mode is disconnected.

Indication Lamp

Description:	When there is a call ringing or new call missed, this indicator lights up.
Result:	The indicator will light up when there is a new call. LCD shows the caller's telephone number, time and date.
Condition:	Subscribe for Caller ID service to your local telephone company

INTERCOM

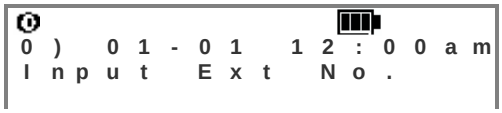

Description:	Allows the extension user to call another user within the system.
Activation:	Press INTERCOM and the extension number in either the handset or hands free mode.
Result:	The LCD display acknowledgement.

Key Sound

Description:	Allows the extension user to be alerted when pressing a dialing key.
Activation:	Press MENU, using ▲ up & ▼ down scroll key to select Phone Setting → Key Sound **(On)**. Default: On
Result:	The LCD will show the key sound acknowledgement.
Deactivation:	Press MENU button, scroll ▲ up and ▼ down key to select Phone Setting → Key Sound **(Off)**.

LCD Contrast

Description:	Allows the user to adjust the contrast of LCD for best display.
Setup:	Press MENU, using ▲ up & ▼ down scroll key to select Phone Setting → LCD contrast **(level from 0-63)**.

Line Flash

Description:	Allows the user to activates the special features provided by your telephone company.
Activation:	Press the FLASH key
Condition:	This function only works with line call.

Line To Line Forward

Description:	Allows an Incoming call to be automatically transferred to an external destination.

Activation::

1. Press MENU, use ▲ Up and ▼ Down Scroll key to select Call Setting → Call Forward (**On**) →Line→Enter FWD number.
2. Input the destination number.
3. Press Soft key OK to exit

Result: The LCD shows the Line forward acknowledgement.

Deactivation: Press MENU, use ▲ Up and ▼ Down Scroll key to select Call Setting →Call Forward (**Off**)

Condition This function can only be set at extension 0 and works in a system with a minimum 2 telephone lines.
It requires initial system setting. (Press MENU, use ▲ Up and ▼ Down Scroll key to select System Config → Advanced Setup → Line to Line →Enter FWD number.)

Make Toll Call

Description: Any extension can be released from a toll call restriction and dial an international call when the entered password is the same as the stored code.

Activation::

1. Press MENU, use ▲ Up and ▼ Down Scroll key to select Call Setting → Make Toll Call
2. Enter 4-digit password. The extension returns to idle mode.
3. If the password is correct, the outgoing call can be made.

Condition This requires that the system has initial set-up at extension 0 for the stored code and the restricted code.

Memo Recording

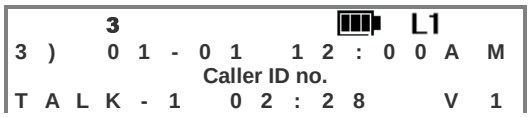

Description: The function allows user to record memo during conversation.

Activation: During conversation, press soft key REC and STOP to record the memo, as you want.

Deactivation Press the soft key STOP to end recording.

Result: The LCD will show the held call acknowledgement.

Condition: The phone must be in conversation mode.
It engages the system just like as a conference call.

Mute

Description: Allows the user to turn off the microphone in Handset or Hands free speaker phone

Activation: Press MUTE button to turn off the microphone in the handset if you have picked up the handset
Press MUTE button to turn off the microphone in the hands

free if you have pressed the SPEAKER key

Result: The Microphone is turned off and the Mute is shown on LCD

Deactivation: Press MUTE button again and the Mute disappears.

Night Mode

Description: Allows the extension user to set the Day and Night modes operation. Day / Night mode can be switched either automatically at a pre-assigned time or manually at any time desired.

Activation: Manual Mode: Press MENU and use ▲ Up and ▼ Down Scroll key to select Call Setting → Day / Night Mode.

Result: "NIGHT" sign will show on LCD if the night mode is turn on.

Condition: Manual Mode: It should be first set Day/Night Mode enabled in Advance Setup and activated at extension 0.
Night Mode Automation must be set by system programming via **extension 0**

Phone Book: Common Store

Description: Allows the extension user to use directory dialing. The system provides 16 memories for Common Phone Book.

Setup:

1. Press MENU and use ▲ Up and ▼ Down Scroll key to select Phone Book → Common Store → browse or add
2. If a record exists, enter the browse mode and use ▲ Up and ▼ Down Scroll key to select record or press the name to search, then select "edit" to the edit the name and phone number with the dial key.
3. If you create new record, enter the "add" mode. Input the name and phone number with the dial key pad.
4. Press the soft key OK to confirm.
5. Then press soft key BACK to the Sub Menu "Common Store" and select "upload" to upload the record to Main Control Base.
6. Press MENU again to exit

Activation: Press the soft key to select Directory (DIR) → Common Phone Book to browse the list with ▲ Up or ▼ Down Scroll key to select the desired record.

Result: The LCD shows the record acknowledgement

Condition: Common Phone Book must be stored using a phone via extension **0**

Phone Book – Personal Store

Description: Allows the extension user to use directory dialing. The system provides 50 memories (1- 50) for Personal Phone

Book.

Setup:

1. Press MENU and use ▲ Up and ▼ Down Scroll key to select Phone Book → Personal Store →browse / add
2. If a record exists, enter the browse mode and use ▲ Up and ▼ Down Scroll key to select record or press the name to search, then select “edit” to the edit the name and phone number with the dial key.
3. If you create new record, enter the “add” mode. Input the name and phone number with the dial key pad.
4. Press the soft key OK to confirm.
5. Then press soft key BACK to the Sub Menu “Personal Store” and select “upload” to upload the record to Main Control Base.
6. Press MENU again to exit

Activation: Press the soft key to select Directory (DIR) → Personal Phone Book to browse the list with ▲ Up or ▼ Down Scroll key to select the desired record.

Result: The LCD will show the record acknowledgement

Redial

Description: Every telephone in the system automatically saves the last telephone number dialed to a line and allows the extension user to dial the same number again.

Activation: Press redial and the telephone dials the last number one time.

Result: The LCD will show the last number

Ring Tone and Volume – Line / Intercom

Description: Allows the telephone user to turn up or down the following volume as desired:

Handset receiver volume
Ringer volume
Speaker volume

Setup: Press MENU, use ▲ Up and ▼ Down Scroll key to select Phone Setting → Ringer

1. Line Ring VOL : press ▲ Up or ▼ Down Scroll key to select the volume level from 0 to 31
2. Line Ring Tone : press ▲ Up or ▼ Down Scroll key to select the pattern from 0 to 6
3. **Inter**c**om** Ring VOL : press ▲ Up or ▼ Down Scroll key to select the volume level from 0 to 31
4. **Inter**c**om** Ringer Tone : press ▲ Up or ▼ Down Scroll key to select the pattern from 0 to 6

Result: The LCD displays indicate the level.

Speaker

Description: Allows the extension user to use hands free in a conversation

Activation: Press SPEAKER key to turn on the speaker

Result: The SPEAKER key LED lights up in hands free mode
The SPEAKER key LED lights off in hand set mode

Deactivation: Press SPEAKER key again to turn off speaker mode

User Name

Description: The user name display is programmable. The user name will be collected automatically when the phone is plugged in. The user name will be displayed on the LCD and will alert the other extensions in their caller information display

Setup:
1. Press MENU, use ▲ Up and ▼ Down Scroll key to select Register → Set User name.
2. The LCD displays " user ext "
3. Press the soft key EDIT to edit the user name
4. Press the soft key CLEAR to clear the existing entry
5. If modifying the exiting user name press ▲ or ▼ to move cursor.
6. Press OK to save the user name to the system and the screen will go back to the normal mode.

Result: The new user name will then display

Voice Mail

Description: This feature set provides multiple users with personal mailboxes. You can reduce the number of miss-handled calls by offering callers a comprehensive voice messaging system. When there is a new message in a mailbox, the voice mail indicator will light (voice mail key for WDE)

Set up There are two ways to enter the user's menu:
1. Press voice mail key when the indicator is not illuminated.
2. Press MENU, use ▲ Up and ▼ Down Scroll key to select Voice Mail→Voice prompt

Press Key	Operation
3	Play message
4	Play memo
5	Change personal greeting
6	Change password
8	Set auto message copy
*	End

The voice prompt will assist the user through a step-by-step process in setting up personal greeting, password or set

auto message copy.
You can also set the password via the menu by using ▲ Up and ▼ Down Scroll key to select Voice Mail→password.

Activation: The extension should be programmed to be voice mail capable. Press MENU, use ▲ Up and ▼ Down Scroll key to select Call Setting → Call Forward (on) →Voice Mail (immediately / busy / no answer / busy & no answer).
LCD will acknowledge the condition you set.

Result: There are two ways to retrieve the voice mail.
1. When the VOICE MAIL key lights up, a single key press will change the phone to hands free mode and the user can follow the voice prompt in retrieving a message or memo. The sequence of message playback will be first in last out.
2. You can browse the voicemail record to select which message playback you choose. Press MENU, use ▲ Up and ▼ Down Scroll key to select Voice Mail → Browse Mode (all / new memo / all memo / new voice mail / all voice mail / filter<by name / *before or after the month selected>).

Condition A mailbox can be accessed remotely. During the personal greeting, the user can press [**] and then the password, to access the user menu remotely. This feature can only be activated if the user has a password in the mailbox.

∗ Filter by Month :

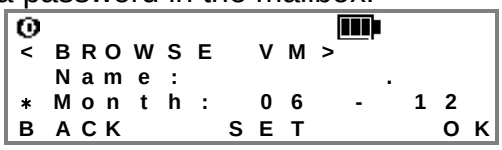

You can set the period (before or after the month set) of voice mail recorded to play back.
1. Enter the month as 2 digits (e.g. O6 for June).
2. Press the soft key “SET” to toggle “before” or “after”.
You can re-enter until set correctly.

Volume Adjustment - Speaker/Handset Receiver/Ringer

Description: Allows the telephone user to turn up or down the following volume as desired:
Handset receiver volume
Speaker volume
Ringer

Setup: Use Volume ▲ Up or ▼ Down key to adjust :
1. Handset receiver volume when the handset off-hook.
2. Ringer volume in the idle mode
3.Speaker Volume after pressing Speaker key first

Condition: Handset volume has 5 levels (1-5) of adjustment
Ringer volume has 32 levels (0-31) of adjustment
Speaker volume has 5 levels (1-5) of adjustment

Result: The LCD displays “Vx ” to indicate the level.

9. Important Safety Instruction

When using this unit, basic safety precautions should always be followed to reduce the risk of fire, electric shock, or personal injury.

Read and understand all instructions

1. Follow all warnings and instructions marked on this unit.
2. Unplug this unit from the wall outlet before cleaning. Do not use liquid or aerosol cleaners; use a damp cloth for cleaning.
3. Do not use this unit near water; for example, near a bathtub, washbowl, kitchen sink, or laundry tubs, in a wet basement, or near a swimming pool.
4. Do not place this unit on an unstable cart, stand or table. It could fall, causing serious damage or impeding operation.
5. This unit should never be placed near or over a radiator or heat register.
6. Never push objects of any kind into this unit as they may touch dangerous voltage points or short out parts that could result in the risk of fire or electrical shock. Never spill liquid of any kind on this unit.
7. Never touch bare telephone wires or terminals unless the telephone line has been disconnected.
8. Use only the power source marked on the unit. If you are not sure of the type of power supplied to your home, consult your dealer or local power company.
9. Do not place objects on the power cord. Install the unit where no one can step or trip on the cord.
10. Do not overload wall outlets and extension cords. This can result in the risk of fire or electric shock.
11. Under the following conditions the telephone unit should be returned for maintenance:
    i. If liquid has been spilled into the unit
    ii. If the unit has been exposed to rain or water
    iii. If the unit does not operate normally when following the operating instructions
    iv. If the unit has been dropped or the casing damaged
    v. If the unit exhibits a distinct change in performance.
12. Do not disassemble this unit. It will void the warranty. Opening or removing covers may expose you to dangerous voltages or other risks. Incorrect re-assembly can cause electrical shock during subsequent use.
13. Avoid using the telephone except cordless type during a thunderstorm. There may be a slight risk of electrical shock from lightning.
14. Do not use this unit to report a gas leak, when in the vicinity of the leak.

CAUTION: To reduce the risk of fire or injury to persons, read and follow these instructions.

1. Use only the battery(ies) specified.

2. Do not dispose of the battery(ies) in a fire. They may explode. Check with local waste management codes for special disposal instruction.

3. Do not open or mutilate the battery(ies). Released electrolyte is corrosive and may cause burns or injury to the eyes or skin. The electrolyte may be toxic if swallowed.

4. Exercise care in handling batteries in order not to short the battery to conductive materials such as rings, bracelets, and keys. The battery may overheat and cause burns.

5. Charge the battery(ies) provided, or identified for use with this product only in accordance with the instructions in this instruction.

Warning:
To prevent fire or shock hazard, do not expose this product to rain or any type of moisture.

10. Specification

Hardware Specification

RF Frequency Band	5.8 GHz
Telephone Line	3
Hands Free	Hands Free Speaker Phone
LCD Display Module	4 line LCD Alpha Numeric Display
Display	Data and Time Display
Caller ID with Call Waiting	Type 1 (FSK) & Type II
Voice Mail / Message Recording	1 hour
Maximum Distance (open space, line at sight)	1000 ft.
Weight	850g
Color	Dark Grey / Silver
WDE Dimension (WxDxH)	220 x 209 x 78 mm
WDE Power / Adaptor	DC 9V / 500mA
Back Up Battery (rechargeable)	3.6 V

Operating Conditions:

Temperature	0 to 45 ℃
Humidity	10% to 95%

11. Limited Warranty

Circle Communication Product Inc (“Circle”) warrants that this 5.8G Multi-line & Multi-handset Cordless Telephone (“Product”) is free from defects in material and workmanship that result in
Product failure during normal usage, according to the following terms and conditions:
1. The limited warranty for the Product extends for ONE (1) year beginning on the date of the purchase of the Product.
2. The limited warranty extends to the original customer of the Product (“Customer”) and is not assignable or transferable to any subsequent customer/end-user.
3. The limited warranty extends only to the Customer who purchased the Product in the United States.
4. During the limited warranty period, Circle will repair, or replace, at Circle' s option, any defective parts, or any parts that will not properly operate for their intended use with new or factory rebuilt replacement items if such repair or replacement is needed because of product malfunction or failure during normal usage. No charge will be made to the Consumer for any such parts. Circle will also pay for the labor charges incurred by Circle in repairing or replacing the defective parts. The limited warranty does not cover defects in appearance, cosmetic, decorative or structural items, including framing, and any non-operative parts. Circle' s limit of liability under the limited warranty shall be the actual cash value of the Product at the time the Consumer returns the Product for repair, determined by the price paid by the Consumer for the Product less a reasonable amount for usage. Circle shall not be liable for any other losses or damages.
These remedies are the Customer’s exclusive remedies for breach of warranty.
5. Upon request from Circle, the Consumer must prove the date of the original purchase of the Product by a dated bill of sale or dated itemized receipt.
6. The Customer shall bear the cost of shipping the Product to Circle in United Status. Circle shall bear the cost of shipping the Product back to the Customer after the completion of service under this limited warranty.
7. The Customer shall have no coverage or benefits under this limited warranty if any of the following conditions are applicable:
a) The Product has been subject to abnormal use, abnormal conditions, improper storage, exposure to moisture or dampness, unauthorized modifications, unauthorized connections, un-authorized repair, misuse, neglect, abuse, accident, alteration, improper installation, or other acts which are not the fault of Circle, including damage caused by shipping.
b) The Product has been damaged from external causes such as collision with an object, or from fire, flooding, sand, dirt, windstorm, lightning, earthquake or damage from exposure to weather conditions, an Act of God, or battery leakage, theft, blown fuse, or improper use of any electrical source, or damage caused by the connection to other products not recommended for interconnection by Circle.
c) Circle was not advised by the Customer in writing of the alleged defect or malfunction of the Product within fourteen (14) days after the expiration of the applicable limited warranty period.
d) The Product serial number plate or the accessory data code has been removed, defaced or altered.
8. If a problem develops during the limited warranty period, the Customer shall take the following step-by-step procedure:
a) the Customer shall contact Circle Customer Service:

Circle Communication Product Inc.
Phone: **310-335-0305**

Email : cs@circleproducts.com

b) The Customer shall include a return address, daytime phone number and/or fax number, complete description of the problem, proof of purchase and service agreement (if applicable). Expenses related to removing the Product from an installation are not covered under this limited warranty.

c) The Customer will be billed for any parts or labor charges not covered by this limited warranty. The Customer will be responsible for any expenses related to reinstallation of the Product.

d) Circle will repair or authorize the repair of the Product under the limited warranty within 30 days after receipt of the Product by Circle or any Circle authorized service center. If Circle cannot perform repair covered under this limited warranty within 30 days, or after a reasonable number of attempts to repair the same defect, Circle at its option, will provide a replacement Product or refund the purchase price of the Product less a reasonable amount for usage.

e) If the Product is returned to Circle during the limited warranty period, but the problem with the Product is not covered under the terms and conditions of this limited warranty, the Customer will be notified and given an estimate of the charges the Customer must pay to have the Product repaired, with all shipping charges billed to the Customer. If the estimate is refused, the Product will be returned freight collect. If the Product is returned to Circle after the expiration of the limited warranty period, Circle' s normal service policies shall apply and the Customer will be responsible for all shipping charges.

9. The Product consists of newly assembled equipment that may contain used components that have been reprocessed to allow machine compliance with Product performance and reliability specifications.

10. ANY IMPLIED WARRANTY OF MERCHANTABILITY, OR FITNESS FOR A PARTICULAR PURPOSE OR USE, SHALL BE LIMITED TO THE DURATION OF THE FOREGOING LIMITED WRITTEN WARRANTY. OTHERWISE, THE FOREGOING LIMITED WARRANTY IS THE CONSUMER' S SOLE AND EXCLUSIVE REMEDY AND IS IN LIEU OF ALL OTHER WARRANTIES, EXPRESS OR IMPLIED. CIRCLE SHALL NOT BE LIABLE FOR SPECIAL, INCIDENTAL OR CONSEQUENTIAL DAMAGES, INCLUDING BUT NOT LIMITED TO, LOSS OF ANTICIPATED BENEFITS OR PROFITS, LOSS OF SAVINGS OR REVENUE, PUNITIVE DAMAGES, LOSS OF USE OF THE PRODUCT OR ANY ASSOCIATED EQUIPMENT, COST OF CAPITAL, COST OF ANY SUBSTITUTE EQUIPMENT OR FACILITIES, DOWN-TIME, THE CLAIMS OF ANY THIRD PARTIES, INCLUDING CUSTOMERS, AND INJURY TO PROPERTY, RESULTING FROM THE PURCHASE OR USE OF THE PRODUCT OR ARISING FROM BREACH OF THE WARRANTY, BREACH OF CONTRACT, NEGLIGENCE, STRICT TORT, OR ANY OTHER LEGAL OR EQUITABLE THEORY, EVEN IF CIRCLE KNEW OF THE LIKELIHOOD OF SUCH DAMAGES. CIRCLE SHALL NOT BE LIABLE FOR DELAY IN RENDERING SERVICE UNDER THE LIMITED WARRANTY, OR LOSS OF USE DURING THE PERIOD THAT THE PRODUCT IS BEING REPAIRED.

11. Some states do not allow limitation of how long an implied warranty lasts, so the above one-year warranty limitation may not apply to you (the Consumer). Some states do not allow the exclusion or limitation of incidental and consequential damages, so certain of the above limitations or exclusions may not apply to you (the Consumer). This limited warranty gives the Customer specific legal rights and the Customer may also have other rights, which vary from state to state.

12. Circle neither assumes nor authorizes any authorized service center or any other person or entity to assume for it any other obligation or liability beyond that which is expressly provided for in this limited warranty including the provider or seller of any

extended warranty or service agreement.

13. This is the entire warranty between Circle and the Customer, and supersedes all prior and contemporaneous agreements or understandings, oral or written, and all communications relating to the Product, and no representation, promise or condition not contained herein shall modify these terms.

14. This limited warranty allocates the risk of failure of the Product between the Consumer and Circle. The allocation is recognized by the Customer and is reflected in the purchase price of the Product.

15. Any action or lawsuit for breach of warranty must be commenced within twelve (12) months following delivery of the Product.

16. Questions concerning this limited warranty may be directed to:

Circle Communication Product Inc.
Phone: **310-335-0305**
Email : cs@circleproducts.com

17. The limited warranty period for Circle supplied attachments and accessories is specifically defined within their own warranty cards and packaging.

12. Important Consumer Information

When using this unit, basic safety precautions should always be followed to reduce the risk of fire, electric shock, or personal injury.

Warning: Changes or modifications to this unit not expressly approved by the party responsible for compliance could void the user's authority to operate the equipment.

NOTE:

1) This equipment has been tested and found to comply with the limits for a Class B digital device, pursuant to Part 15 of the FCC Rules. These limits are designed to provide reasonable protection against harmful interference in a residential installation. This equipment generates, uses and can radiate radio frequency energy and, if not installed and used in accordance with the instructions, may cause harmful interference to radio communications.
However, there is no guarantee that interference will not occur in a particular installation. If this equipment does cause harmful interference to radio or television reception, which can be determined by turning the equipment off and on, the user is encouraged to try to correct the interference by one or more of the following measures:

- ☐Reorient or relocate the receiving antenna.
- ☐Increase the separation between the equipment and receiver.
- ☐Connect the equipment into an outlet on a circuit different from that to which the receiver is needed.
- ☐Consult the dealer or an experienced radio/TV technician for help.

2) This equipment complies with Part 68 of the FCC rules and the requirements adopted by the ACTA. On the bottom of this equipment is a label that contains, among other information, a product identifier in the format US:AAAEQ##TXXXX. If requested, this number must be provided to the telephone company.

3) An applicable certification jacks Universal Service Order Codes (USOC) for the equipment is provided (i.e., RJ11C) in the packaging with each piece of approved terminal equipment.

4) A plug and jack used to connect this equipment to the premises wiring and telephone network must comply with the applicable FCC Part 68 rules and requirements adopted by the ACTA. A compliant telephone cord and modular plug is provided with this product. It is designed to be connected to a compatible modular jack that is also compliant. See installation instructions for details.

5) The REN is used to determine the number of devices that may be connected to a telephone line. Excessive RENs on a telephone line may result in the devices not ringing in response to an incoming call. In most but not all areas, the sum of RENs should not exceed five (5.0). To be certain of the number of devices that may be connected to a line, as determined by the total RENs, contact the local telephone company. [For products approved after July 23, 2001, the REN for this product is part of the product identifier that

has the format US:AAAEQ##TXXXX. The digits represented by ## are the REN without a decimal point (e.g., 03 is a REN of 0.3). For earlier products, the REN is separately shown on the label.]

6) If this equipment causes harm to the telephone network, the telephone company will notify you in advance that temporary discontinuance of service may be required. But if advance notice isn' t practical, the telephone company will notify the customer as soon as possible. Also, you will be advised of your right to file a complaint with the FCC if you believe it is necessary.

7) The telephone company may make changes in its facilities, equipment, operations or procedures that could affect the operation of the equipment. If this happens the telephone company will provide advance notice in order for you to make necessary modifications to maintain uninterrupted service.

8) Should you experience trouble with this equipment, please contact (Circle Communication Products, 2554 Lincoln Blvd #111 Marina Del Rey CA 90291 USA) for repair or warranty information. If the equipment is causing harm to the telephone network, the telephone company may request that you disconnect the equipment until the problem is resolved.

9) Please follow instructions for repairing if any (e.g. battery replacement section); otherwise do not alternate or repair any parts of device except specified.

10) Connection to party line service is subject to state tariffs. Contact the state public utility commission, public service commission or corporation commission for information.

11) NOTICE: If your home has specially wired alarm equipment connected to the telephone line, ensure the installation of this [equipment ID] does not disable your alarm equipment. If you have questions about what will disable alarm equipment, consult your telephone company or a qualified installer.

12) This equipment is hearing aid compatible.
NOTICE: According to telephone company reports, AC electrical surges, typically resulting from lightning strikes, are very destructive to telephone equipment connected to AC power sources. To minimize damage from these types of surges, a surge arrestor is recommended.