HAiCOM™ GPS

Wireless Bluetooth® GPS Receiver

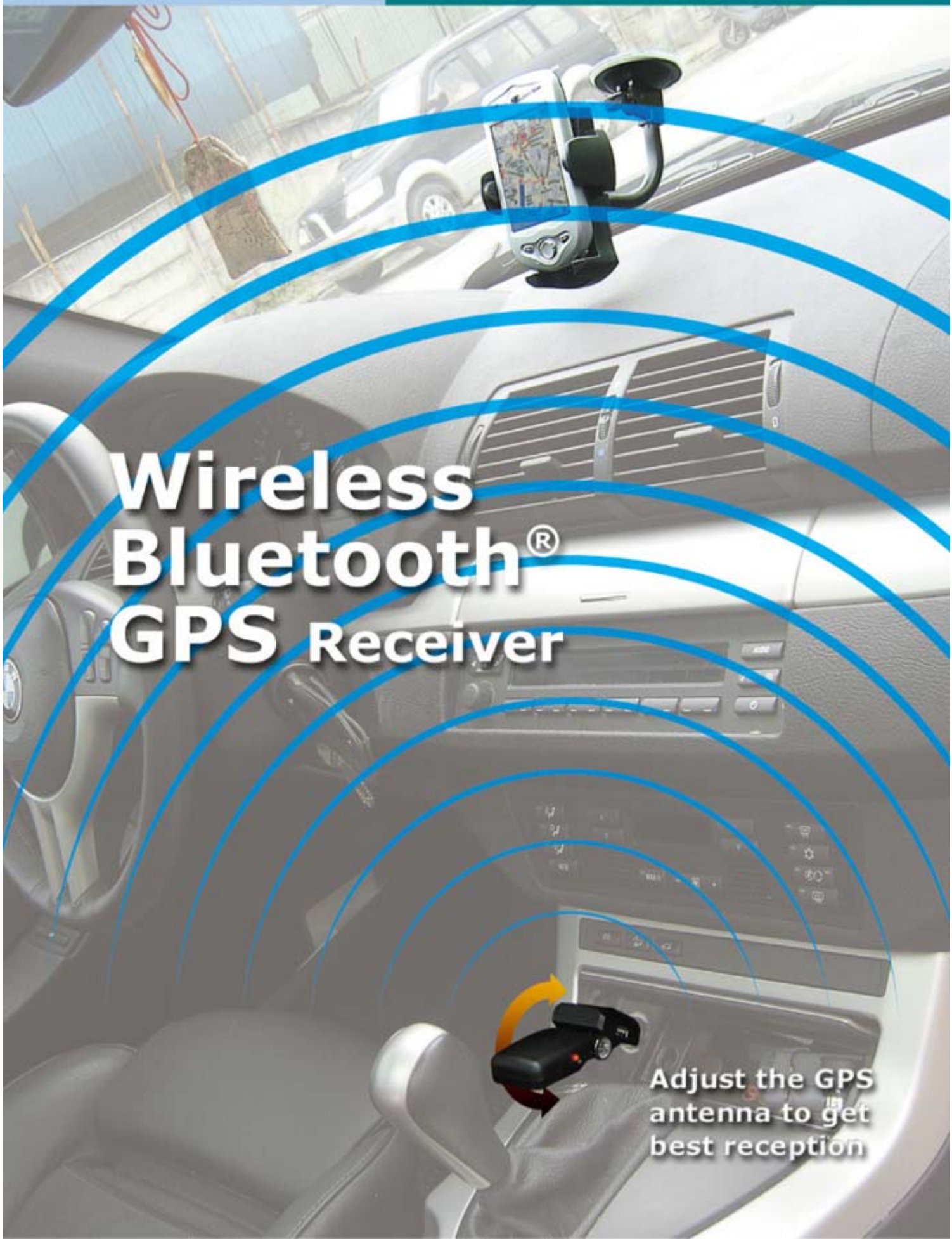

HI-407BT

HI-407BT *Bluetooth*® GPS receiver with Cigarette Lighter

Introduction:

HI-407BT is a standard ***Bluetooth***® GPS receiver and powered by regular in car cigarette lighter. HI-407BT equipped with the most recent 20 channel ultra high sensitive SiRF StarIII GPS chipsets. Simply plug HI-407BT into any regular in car cigarette lighter outlet (can take DC12V to DC24V), user can instantly enjoy the state of the art wireless GPS navigation.

HI-407BT advantages:

1. Simply plug in the HI-407BT into the standard in car cigarette lighter outlet in front or in the trunk on back of the car (with optional external antenna), as soon as the car powered on, user can start using the wireless GPS navigation without worry about the ***Bluetooth***® GPS receiver battery life.

2. Equipped with the 20 channel ultra high sensitive SiRF StarIII GPS module, HI-407BT can get 3D fixed on most cigarette lighter outlet locations and without using the external antenna.

3. Unlike normal ***Bluetooth***® GPS receiver moving around dashboard while driving, HI-407BT can fixed on the cigarette lighter outlet and without worry about where to place the unit.

4. By connecting with different optional cables on the side of the unit, HI-407BT can also be used as a regular GPS mouse. HI-407BT can not only be wireless ***Bluetooth***® GPS receiver and also be the wired GPS receivers, like, USB GPS receiver, RS232 GPS receiver, PDA GPS receiver, etc.

Accessories:

Standard Accessories:

	Model Name	model #
1.	HI-407BT Bluetooth GPS receiver unit	HI-407BT
2.	Tool CD	CDR-01
3.	User Manual	MAU-407

1

2

3

Optional Accessories:

	Model Name	model #
1.	MMCX External antenna	ANT-MMC
2.	USB charger cable for DC plug (plug on the side of the HI-407BT USB port)	USB-407
3.	PDA charger connector cable	HI-407-XXX

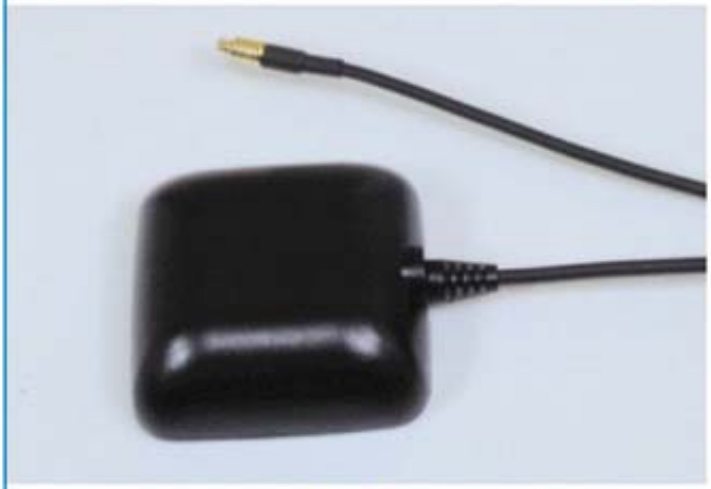

1

or

2

3

HI-407BT *Bluetooth*® GPS receiver installed on cigarette lighter outlet

LED Indicator (Red)

LED off	Receiver switch off
LED flashing	GPS Position Fixed
LED stay on	GPS Signal searching

LED Indicator (Blue)

LED off	***Bluetooth***® switch off
LED flashing	***Bluetooth***® searching
LED stay on	***Bluetooth***® connected

In case of HI-407BT unable to receive enough satellite signal, one can use the external antenna (MMCX type) to get better signal.

HI-407BT Installed

in the trunk on back of the car

Using HI-407BT while charging the PDA

*** Pinout:**

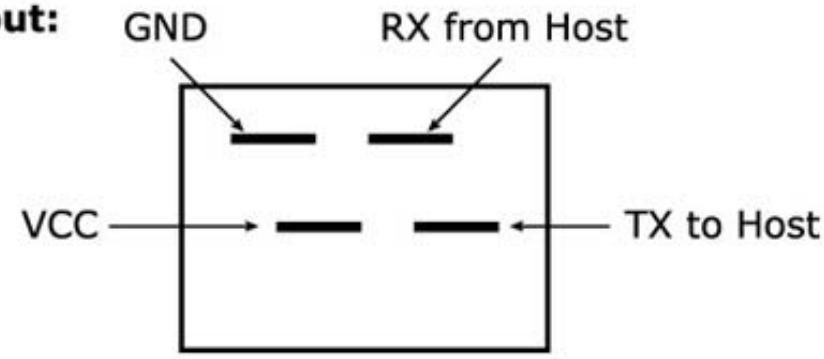

Solder (back) side

Dimension:

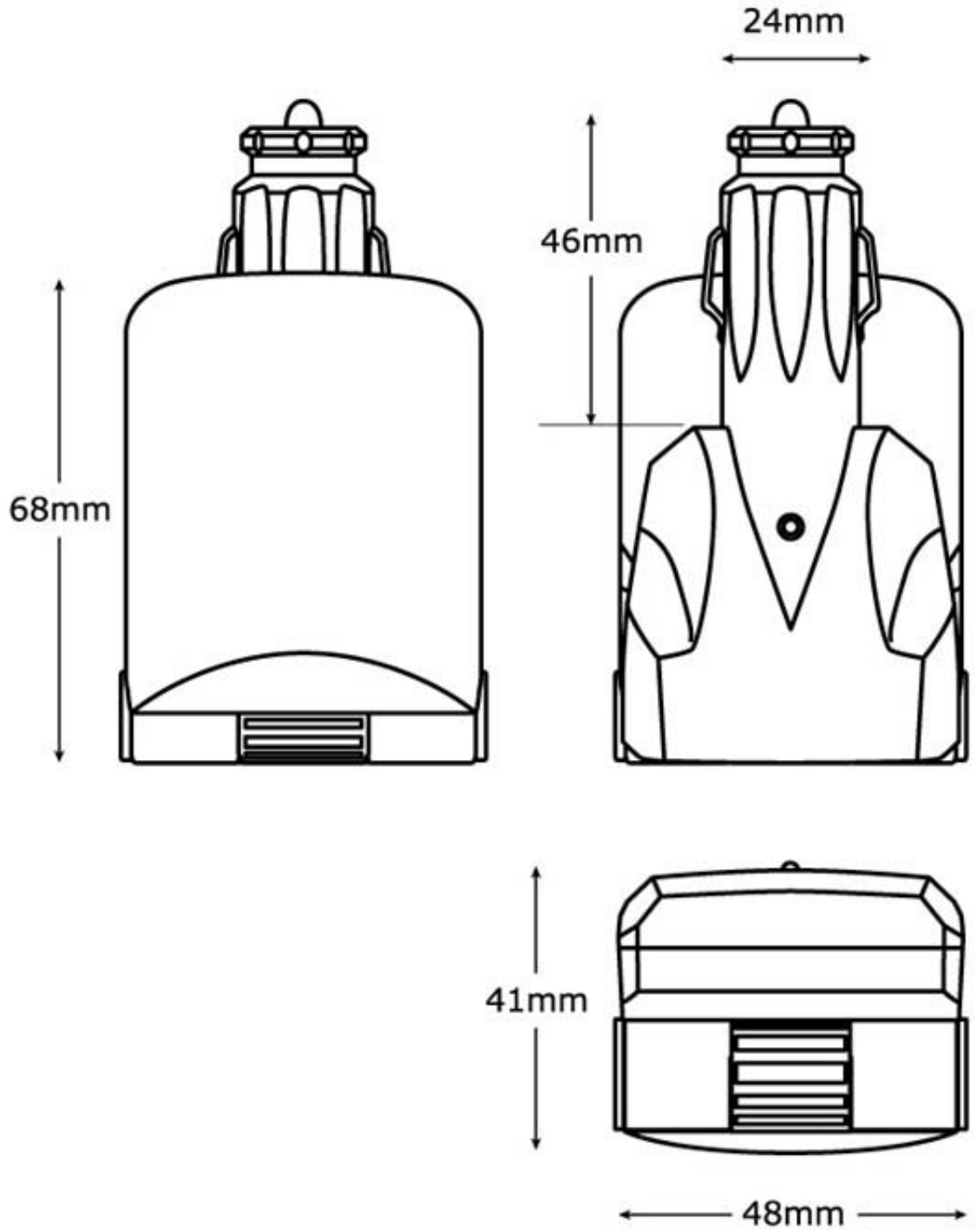

11

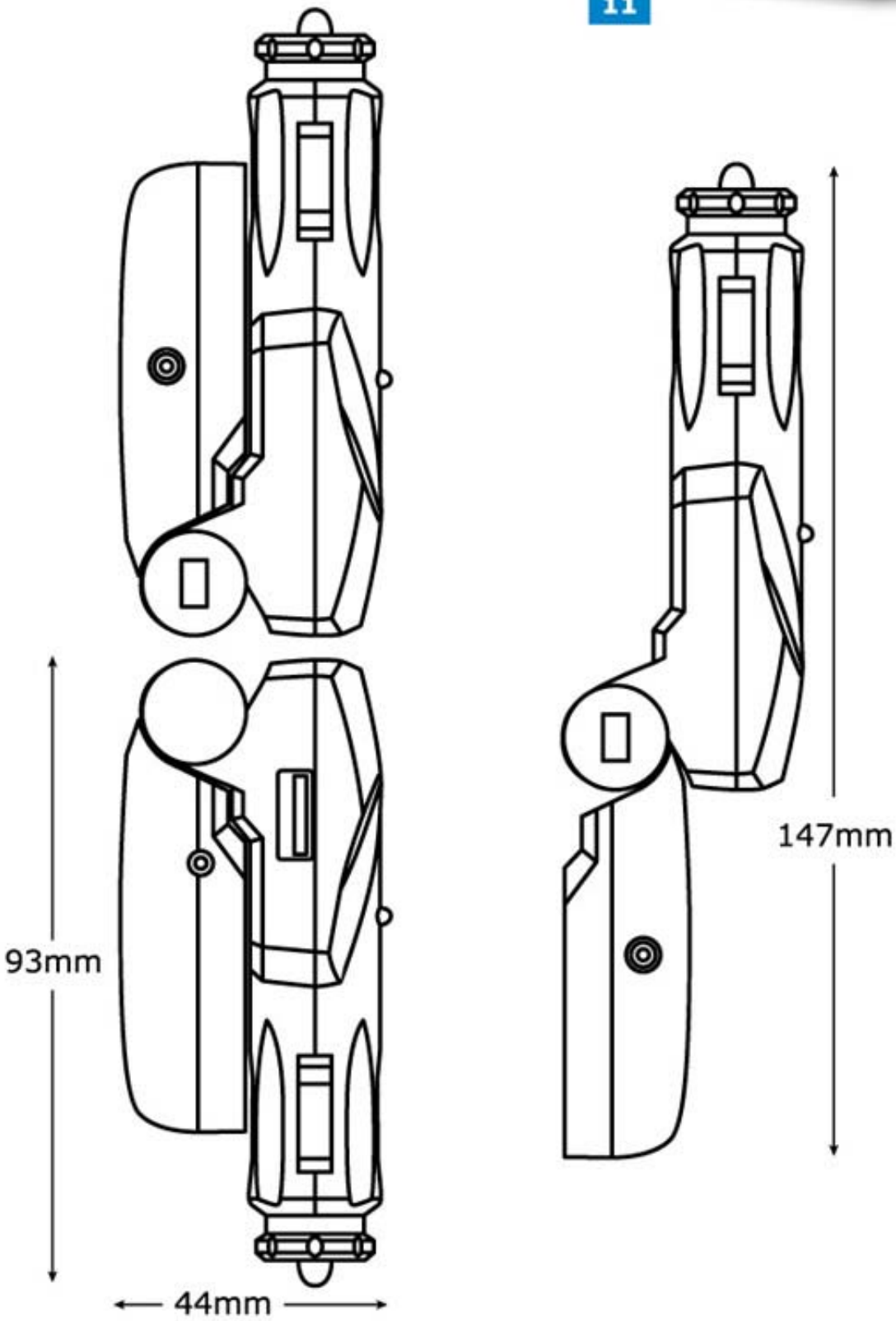

GPS Receiver

Specification

Chipset	SiRF Star III
Interfaces	***Bluetooth***® & Mini-1394
Protocol	NMEA0183 GGA, GSA, GSV, RMC, GLL
Baud Rate	4800, N, 8, 1
Max. Update Rate	1 Hz
Datum	WGS84
Channel	20 channel
Frequency	L1, 1575.42MHz
Hot Start	8 sec. Average
Warm Start	38 sec. Average
Cold Start	48 sec. Average
Reacquisition Tike	100 ms
Position Accuracy	15m 2D RMS, SA off
Macimum Altitude	18,000m
Maximum velocity	515m/s
Voltage	DC 3.3V+-10%
Power consumption	90mA continuous mode
Antenna Type	Built-in active antenna
External Antenna Connector	MMCX (Optional)
Dimension	Fold: 93 (L) x 48 (W) x 41 (H)mm Unfold: 147 (L) x 48(W) x 41 (H)mm
LED Indicator	3D Positioning (blinking) or Searching GPS (on)

Bluetooth® Specifications:

Bluetooth® V1.1 Compliances

Frequency Range:	2.4 ~ 2.4835 GHz unlicensed ISM band
Interface:	USB/UART/SPI
Receiver Sensetivity:	-80 dBm @ 0.1% BER
Transmitting Power:	Class 2 -6 dBm ~ +4 dBm
RF Input Impedance:	50 ohms
Frequency hopping:	1600hops/sec.
Baseband Crystal OSC:	16MHz
Data Rate:	Up to 723Kb/s
Operating Temperature:	-20°C ~ +80°C
Storage Temperature:	-30°C ~ +90°C
Transmitting Range:	10 meters (Typical)
Power Consumption:	65 mA (Typical)

HI-407BT as a regular GPS mouse:

By connection different optional connecting cables, HI-407BT can be all kinds of independent wired GPS receiver solutions.

Get Connected; Installation Guide

Laptop PC Installations

Run "My ***Bluetooth®*** Places" and Double Click the "Find ***Bluetooth®*** Devices" icon

Double Click "BT GPS"

Double Click "SPP on BT GPS"

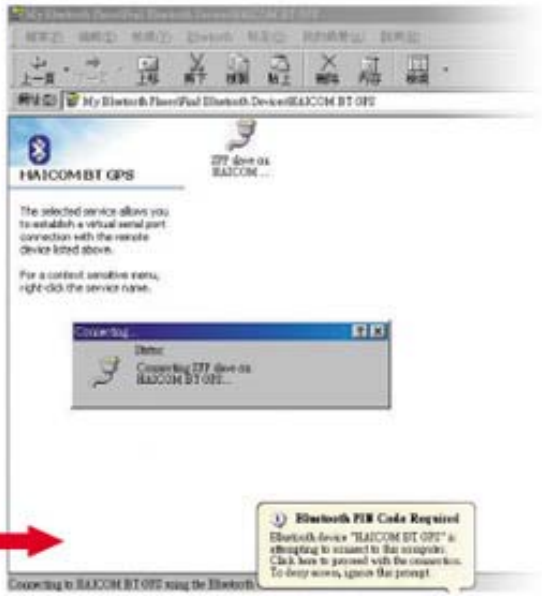

Key in pin code: "0000"

Connected

PDA Installations

Double Click the ***Bluetooth***® icon

Double click "BT GPS"

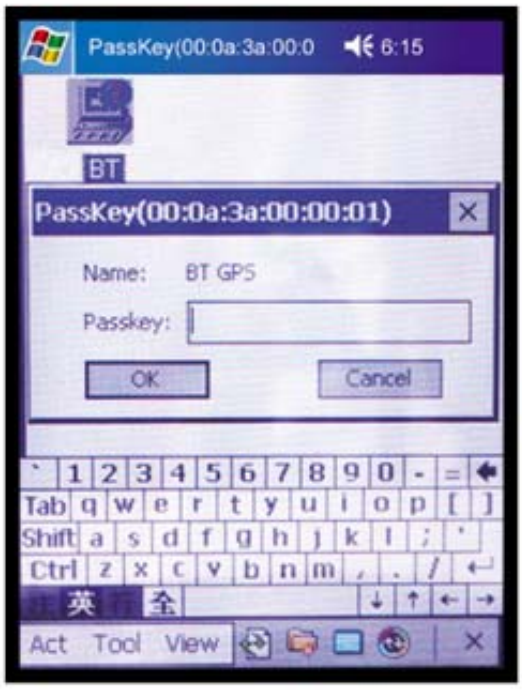

Key in pin code: "0000"

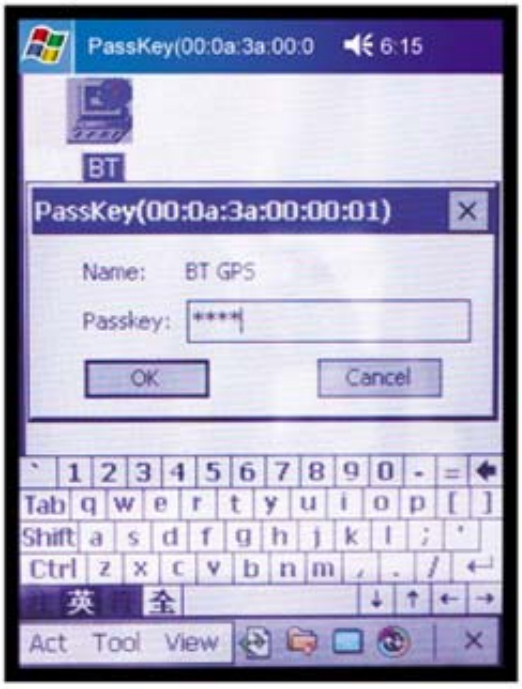

Found the host device

For Connected with device

Select the correct com port

Start GPS, NMEA message inflow

More satellites info

GPS Technical Data

ONE-PULSE-PER-SECOND (1PPS) OUTPUT

The one-pulse-per-second output is provided for applications requiring precise timing measurements. The output pulse is 1usec in duration. Rising edge of the output pulse is accurate to +/-1usec with respect to the start of each GPS second. Accuracy of the one-pulse-per-second output is maintained only when the GPS receiver has valid position fix.

The 1PPS output is always generated when the GPS receiver is powered-on. Proper adjustment of the 1PPS output to align with the GPS second requires calculation of the receiver clock offset and clock drift-rate as part of the position-velocity-time (PVT) solution. When enough satellite signals are received to generate valid position fixes, the 1PPS output is adjusted to align with the GPS second in several seconds. When the 1PPS output is brought in sync with the GPS second, the 1PPS Valid Signal on the I/O pin becomes active (HIGH); when the 1PPS output is not yet in sync with the GPS second, the 1PPS Valid Signal remains inactive (LOW).

As long as enough satellite signals are received to generate valid position fixes, the 1PPS output remains synchronized to the GPS second, and the 1PPS Valid Signal remains active. If signal blockage prevents the receiver from generating valid position fix, the 1PPS output will drift away from the GPS second and the 1PPS Valid Signal will become inactive. Upon re-acquiring enough satellites to generate consecutive valid position fixes, the 1PPS Valid Signal will become active again, signaling that the 1PPS output is again synchronized with the GPS second.

For best stable operation of the 1PPS signal, it is to be operated in static environment having clear view of the sky.

SOFTWARE INTERFACE

This section describes the details of the serial port commands through which the GPS module is controlled and monitored. The serial port commands allow users to set the receiver parameters, configure output message type, and retrieve status information. The baud rate and protocol of the host COM port must match the baud rate and protocol of the GPS receiver serial port for commands and data to be successfully transmitted and received. The default receiver protocol is 4800bps, 8 data bits, 1 stop bit, and none parity.

NMEA OUTPUT MESSAGE SPECIFICATIONS

The GPS back card supports NMEA-0183 output format as defined by the National Marine Electronics Association (http://www.nmea.org). The currently supported NMEA messages for GPS applications are:

- **GGA** Global Positioning System Fix Data
- **GLL** Geographic Position Latitude / Longitude
- **GSA** GNSS DOP and Active Satellites
- **GSV** GNSS Satellites in View
- **RMC** Recommended Minimum Specific GNSS Data
- **VTG** Course Over Ground and Ground Speed

NMEA Messages

The serial interface protocol is based on the National Marine Electronics Association's NMEA 0183 ASCII interface specification. This standard is fully define in "NMEA 0183, Version 3.01" The standard may be obtained from NMEA, www.nmea.org

GGA - GPS FIX DATA

Time, position and position-fix related data (number of satellites in use, HDOP, etc.).

Format:

$GPGGA,<1>,<2>,<3>,<4>,<5>,<6>,<7>,<8>,<9>,
M,<10>,M,<11>,<12>,*<13><CR><LF>

Example:

$GPGGA,104549.04,2447.2038,N,12100.4990,E,1,06,
01.7,00078.8,M,0016.3,M,,*5C<CR><LF>

Field	Example	Description
1	104549.04	UTC time in hhmmss.ss format, 000000.00 ~ 235959.99
2	2447.2038	Latitude in ddmm.mmmm format Leading zeros transmitted
3	N	Latitude hemisphere indicator, 'N' = North, 'S' = South
4	12100.4990	Longitude in dddmm.mmmm format Leading zeros transmitted
5	E	Longitude hemisphere indicator, 'E' = East, 'W' = West
6	1	Position fix quality indicator 0: position fix unavailable 1: valid position fix, SPS mode 2: valid position fix, differential GPS mode
7	06	Number of satellites in use, 00 ~ 12
8	01.7	Horizontal dilution of precision, 00.0 ~ 99.9
9	00078.8	Antenna height above/below mean sea level, -9999.9 ~ 17999.9
10	0016.3	Geoidal height, -999.9 ~ 9999.9
11		Age of DGPS data since last valid RTCM transmission in xxx format (seconds) NULL when DGPS not used
12		Differential reference station ID, 0000 ~ 1023 NULL when DGPS not used
13	5C	Checksum

Note: The checksum field starts with a '*' and consists of 2 characters representing a hex number. The checksum is the exclusive OR of all characters between '$' and '*'.

GLL - LATITUDE AND LONGITUDE, WITH TIME OF POSITION FIX AND STATUS

Latitude and longitude of current position, time, and status.

Format:

$GPGLL,<1>,<2>,<3>,<4>,<5>,<6>,<7>*<8><CR><LF>

Example:

$GPGLL,2447.2073,N,12100.5022,E,104548.04,A,
A*65<CR><LF>

Field	Example	Description
1	2447.2073	Latitude in ddmm.mmmm format Leading zeros transmitted
2	N	Latitude hemisphere indicator, 'N' = North, 'S' = South
3	12100.5022	Longitude in dddmm.mmmm format Leading zeros transmitted
4	E	Longitude hemisphere indicator, 'E' = East, 'W' = West
5	104548.04	UTC time in hhmmss.ss format, 000000.00 ~ 235959.99
6	A	Status, 'A' = valid position, 'V' = navigation receiver warning
7	A	Mode indicator 'N' = Data invalid 'D' = Differential 'A' = Autonomous 'E' = Estimated
8	65	Checksum

GSA - GPS DOP AND ACTIVE SATELLITES

GPS receiver operating mode, satellites used for navigation, and DOP values.

Format:

$GPGSA,<1>,<2>,<3>,<3>,<3>,<3>,<3>,<3>,<3>,<3>,
<3>,<3>,<3>,<3>,<4>,<5>,<6>*<7><CR><LF>

Example:

$GPGSA,A,3,26,21,,,09,17,,,,,,,10.8,02.1,10.6*07<CR><LF>

Field	Example	Description
1	A	Mode, 'M' = Manual, 'A' = Automatic
2	3	Fix type, 1 = not available, 2 = 2D fix, 3 = 3D fix
3	26,21,,,09, 17,,,,,,	PRN number, 01 to 32, of satellite used in solution, up to 12 transmitted
4	10.8	Position dilution of precision, 00.0 to 99.9
5	02.1	Horizontal dilution of precision, 00.0 to 99.9
6	10.6	Vertical dilution of precision, 00.0 to 99.9
7	07	Checksum

GSV - GPS SATELLITE IN VIEW

Number of satellites in view, PRN number, elevation angle, azimuth angle, and C/No. Only up to four satellite details are transmitted per message. Additional satellite in view information is sent in subsequent GSV messages.

Format:

$GPGSV,<1>,<2>,<3>,<4>,<5>,<6>,<7>, ... ,
<4>,<5>,<6>,<7> *<8><CR><LF>

Example:

$GPGSV,2,1,08,26,50,016,40,09,50,173,39,21,43,316,
38,17,41,144,42*7C<CR><LF>
$GPGSV,2,2,08,29,38,029,37,10,27,082,32,18,22,309,
24,24,09,145,*7B<CR><LF>

Field	Example	Description
1	2	Total number of GSV messages to be transmitted
2	1	Number of current GSV message
3	08	Total number of satellites in view, 00 ~ 12
4	26	Satellite PRN number, GPS: 01 ~ 32, SBAS: 33 ~ 64 (33 = PRN120)
5	50	Satellite elevation number, 00 ~ 90 degrees
6	016	Satellite azimuth angle, 000 ~ 359 degrees
7	40	C/No, 00 ~ 99 dBNull when not tracking
8	7C	Checksum

RMC - RECOMMANDED MINIMUM SPECIFIC GPS/TRANSIT DATA

Time, date, position, course and speed data.

Format:

$GPRMC,<1>,<2>,<3>,<4>,<5>,<6>,<7>,<8>,<9>,<10>,
<11>,<12>*<13><CR><LF>

Example:

$GPRMC,104549.04,A,2447.2038,N,12100.4990,E,
016.0,221.0,250304,003.3,W,A*22<CR><LF>

Field	Example	Description
1	104549.04	UTC time in hhmmss.ss format, 000000.00 ~ 235959.99
2	A	Status, 'V' = navigation receiver warning, 'A' = valid position
3	2447.2038	Latitude in dddmm.mmmm format Leading zeros transmitted
4	N	Latitude hemisphere indicator, 'N' = North, 'S' = South
5	12100.4990	Longitude in dddmm.mmmm format Leading zeros transmitted
6	E	Longitude hemisphere indicator, 'E' = East, 'W' = West
7	016.0	Speed over ground, 000.0 ~ 999.9 knots
8	221.0	Course over ground, 000.0 ~ 359.9 degrees
9	250304	UTC date of position fix, ddmmyy format
10	003.3	Magnetic variation, 000.0 ~ 180.0 degrees
11	W	Magnetic variation direction, 'E' = East, 'W' = West
12	A	Mode indicator 'N' = Data invalid 'D' = Differential 'A' = Autonomous 'E' = Estimated
13	22	Checksum

VTG - COURSE OVER GROUND AND GROUND SPEED

Velocity is given as course over ground (COG) and speed over ground (SOG).

Format:

GPVTG,<1>,T,<2>,M,<3>,N,<4>,K,<5>*<6><CR><LF>

Example:

$GPVTG,221.0,T,224.3,M,016.0,N,0029.6,K,A*1F<CR><LF>

Field	Example	Description
1	221.0	True course over ground, 000.0 ~ 359.9 degrees
2	224.3	Magnetic course over ground, 000.0 ~ 359.9 degrees
3	016.0	Speed over ground, 000.0 ~ 999.9 knots
4	0029.6	Speed over ground, 0000.0 ~ 1800.0 kilometers per hour
5	A	Mode indicator 'N' = Data invalid 'A' = Autonomous 'D' = Differential 'E' = Estimated
6	1F	Checksum

Notice : The changes or modifications not expressly approved by the party responsible for compliance could void the user's authority to operate the equipment.

This device complies with Part 15 of the FCC Rules. Operation is subject to the following two conditions: (1) this device may not cause harmful interference, and (2) this device must accept any interference received, including interference that may cause undesired operation.

IMPORTANT NOTE: To comply with the FCC RF exposure compliance requirements, no change to the antenna or the device is permitted. Any change to the antenna or the device could result in the device exceeding the RF exposure requirements and void user's authority to operate the device.

NOTE: This equipment has been tested and found to comply with the limits for a Class B digital device, pursuant to Part 15 of the FCC Rules. These limits are designed to provide reasonable protection against harmful interference in a residential installation. This equipment generates, uses and can radiate radio frequency energy and, if not installed and used in accordance with the instructions, may cause harmful interference to radio communications. However, there is no guarantee that interference will not occur in a particular installation. If this equipment does cause harmful interference to radio or television reception, which can be determined by turning the equipment off and on, the user is encouraged to try to correct the interference by one or more of the following measures:

-- Reorient or relocate the receiving antenna.
-- Increase the separation between the equipment and receiver.
-- Connect the equipment into an outlet on a circuit different from that to which the receiver is connected.
-- Consult the dealer or an experienced radio/TV technician for help.

4 710635 517526