Aeras WaveLink User Manual

Part Number MANL-5X-150-001

6/03 Version A

This products described in this document are products of Aeras Networks or its licensers. No part of this document may be photocopied, reproduced, translated, transferred, disclosed or otherwise provided to third parties without the prior written consent of an officer of Aeras Networks.

This document applies to the Aeras Network release of the WaveLink product line and to all subsequent versions and releases of the hardware or software unless otherwise indicated in a new version or an update package for this edition.

Publications requests should be addressed to your local sales support office.

Aeras Networks reserves the right to make changes to any products described herein at any time without notice. Aeras Network does not assume any responsibility or liability arising out of the application or use of any product described herein, except as expressly agreed to in writing by Aeras Networks nor does the purchase or use of a product from Aeras Networks convey a license under any patent rights, copyrights, trademark rights, or any other of the intellectual property rights of Aeras Networks or third parties.

Use, duplication, or disclosure in this document is furnished under a license agreement or nondisclosure agreement. The software described in this document is furnished under a license agreement or nondisclosure agreement. The software may be used or copied only in accordance with the terms of the agreement. It is a violation of Aeras Networks proprietary rights to copy the software of any medium except as specifically allowed in the license or nondisclosure agreement.

© 2003 Aeras Network. All Rights Reserved

United States Federal Communications Commission Required Use Documentation

This equipment complies with Part 15 of the FCC Rules. Operation is subject to the following two conditions: (1) this device may not cause harmful interference, and (2) this device must accept any interference received, including interference that may cause undesired operation.

Changes or modifications not expressly approved by Aeras Networks in writing can void the user's authority to operate this equipment.

NOTE This device must be professionally installed.

NOTE This device is to be exclusively used for fixed point-to-point operation with directional antennas.

(this page intentionally left blank)

Table of Contents

Welcome! ix
Document Organization ix
• Microwave Radiation Warnings ix
• Regulatory Information x
• Related Documentation xi
• Customer Support Services xii
• Conventions Used in this Manual xiv

Chapter 1 System Description 1

1-1 General 1
1-1.1 Products 1
1-1.2 Applications 2
1-2 System Overview 2
1-3 Features 5
1-4 Aeras WaveLink Basic Structure 6
1-4.1 Radio Links 6
1-4.2 Data Stream 6
1-4.3 Aeras WaveLink Models 6
1-4.4 Mounting and Antenna Alignment 8
1-4.5 Interface Connectors and Indicators 8
1-4.6 Cables 10
1-4.7 Integral Antenna 11
1-4.8 External Antenna 12
1-4.9 Configuration, Operation, and Monitoring 14
1-4.10 SNMP 14
1-4.11 Aeras WaveLink Network Management Architecture 15
1-4.12 NMS Connectivity 15
1-4.13 Web-Based GUI Access Security 16
1-4.14 GUI Functions 16
1-5 Typical Applications 18
1-5.1 Internet (ISP) 18
1-5.2 Private Network Wireless Bridged LANs and WANs 18
1-5.3 PCS/PCN and Cellular Networks 18
1-5.4 Wireless Local Loop Networks and Local Exchange Bypass 19
1-5.5 Business Bypass and Local Exchange Bypass 19
1-5.6 Backhaul for Wireless MTU and MDU Access 19
1-5.7 Wireless Mesh Backhaul Networks 20
1-5.8 Wireless ATM Mesh Distribution with Aeras WaveStream Switch 21
1-6 Specifications 21

Chapter 2 Installation Steering Guide 23

2-1 Installation Flow Chart 23

Chapter 3 Installation Planning 25

3-1 Planning a Aeras WaveLink Network 25
3-2 Site Planning 30
3-3 Planning Element and Network Management Ethernet Links 31
3-3.1 Links From the EMS or NMS to the Aeras WaveLink 31
3-3.2 Links Between Aeras WaveLinks 31
3-4 Planning DS-3 or E3 Links 33
3-5 Power Planning 33
3-6 Transmit Power Planning 33
3-6.1 Maximum Aeras WaveLink Power Output 33
3-6.2 Calculating the Required Transmit Power 36
3-7 Radio Link Planning 37

Chapter 4 Installing the Aeras WaveLink 41

4-1 Before Installing 42
4-1.1 General Guidelines 42
4-1.2 Equipment and Unpacking 43
4-1.3 Packing Lists and Orderable Parts 43
4-1.4 Installation Tools and Materials 46
4-2 Initial Configuration 47
4-2.1 Connecting a Craft PC to the Aeras WaveLink 47
4-2.2 Logging In to the Aeras WaveLink Built-In Web Server 48
4-3 Mounting the Aeras WaveLink 58
4-3.1 Installing the Aeras WaveLink Mounting Bracket 58
4-3.2 Attaching the Aeras WaveLink to the Mounting Bracket 63
4-4 External Antenna Installation (Optional) 67
4-4.1 Installing an External Antenna Mounting Bracket 67
4-5 Completing the Aeras WaveLink Installation 69
4-5.1 Mounting the Lightning Arrestor 69
4-5.2 Routing the Data and Power Cables from the Lightning Arrestor 69
4-5.3 Grounding the Aeras WaveLink and Antenna 70
4-5.4 Sealing the Data and Power Cable Connectors 71
4-6 Aligning the Antenna 72
4-6.1 Integral Antenna on a Single Adjustable Elevation Mount 72
4-6.2 Integral Antenna on a Dual Adjustable Elevation Mount 73
4-6.3 External Antenna on Antenna-Specific Mount 74
4-7 Acceptance Testing 75

Chapter 5 Final Aeras WaveLink Setup 79

5-1 Post Acceptance Test Configuration 79
5-1.1 Curent Aeras WaveLink Status 79
5-1.2 Final Aeras WaveLink Configuration 79
5-2 Updating the Aeras WaveLink Software 81

Chapter 6 Monitoring and Trend Analysis 83

6-1 Built-In Web Server Interface 83
6-2 SNMP Network and Element Management Systems 83

6-2.1 SNMP Details 83
6-2.2 Monitoring Error Messages and Traps 84

Chapter 7 Troubleshooting the Aeras WaveLink 85

7-1 Troubleshooting Tables 85
7-2 Using the Aeras WaveLink LEDs 86
7-3 Using RSSI 86
7-4 Using a Web Browser 86

Appendix 1Interface Cable Pinouts 87

A1-1 DS-3 and E3 Cable 87
A1-2 Ethernet Data Cable 87
A1-3 DC Power Cable 88
A1-4 Ethernet Crossover Cable 88
A1-5 External Antenna Cable 89
A1-6 RS-232 Craft Cable 89
A1-7 Aeras WaveStream Switch Cable 90

Appendix 2Technical Specifications 91

A2-1 Aeras WaveLink Radio 91
A2-2 Factory-Supplied Antennas 103

Appendix 3Using the Web-Based GUI User Interface 105

A3-1 Web Browser Requirements 105
A3-2 Connecting A Web Browser 105
A3-3 Accessing the Aeras WaveLink Web Pages 105
A3-4 Aeras WaveLink Web Pages 106

Appendix 4Grounding and Lightning Protection 117

A4-1 Overview 117
A4-2 Grounding 118
A4-3 Lightning Protection 119
A4-4 Bibliography 120

Appendix 5Enterprise MIBs and Traps 121

A5-1 Enterprise MIB 121
A5-2 Enterprise Traps 141

Index 143

(this page intentionally left blank)

Preface

Welcome!

This manual is intended for the technical personnel who will install and operate the Aeras WaveLink. Such personnel are typically experienced and skilled technicians familiar with on site, physical installation and connection of equipment, including maintenance work. It is also intended for system administration personnel performing initial configuration and subsequent system reconfiguration, as well as current system maintenance activities.

Document Organization

This manual provides a detailed description of the Aeras WaveLink components, and operating, installation and management procedures.

- Chapter 1 provides an overview and briefly describes typical applications.
- Chapter 2 provides an installation steering guide with references to subsequent installation sections.
- Chapter 3 describes how to plan the Aeras WaveLink network, radio links, and remote element and network management links, and individual Aeras WaveLink radios.
- Chapter 4 provides detailed hardware installation and acceptance test procedures.
- Chapter 5 describes final configuration procedures and the Web browser user interface.
- Chapter 6 presents procedures for monitoring and performing trend analysis on the Aeras WaveLink.
- Chapter 7 provides instructions for troubleshooting the Aeras WaveLink.
- Appendixes provide detailed technical information for carrying out the installation and maintenance activities described in the other chapters of this manual.

Microwave Radiation Warnings

Radio Warning

Under normal operating conditions, Aeras WaveLink radio equipment complies with the limits for human exposure to radio frequency (RF) fields adopted by the Federal Communications Commission (FCC). All Aeras Networks, Inc. microwave radio equipment is designed so that under normal working conditions, microwave radiation directly from the radio is negligible when compared with the permissible limit of continuous daily exposure recommended in the United States by ANSI/IEEE C95.1-1991 (R1997), Safety Levels with Respect to Human Exposure to Radio Frequency Electromagnetic Fields, 3 kHz to 300 GHz.

Microwave signal levels that give rise to hazardous radiation levels can exist within transmitter power amplifiers, associated RF multiplexers, and antenna systems.

> Never look into the front of an open RF connection or RF antenna as eyes are particularly vulnerable to radiation. Do not disconnect RF coaxial connectors, open microwave units, or break down any microwave screening while the radio equipment is operating.

Antenna Warning

Designed for point-to-point operation, the Aeras WaveLink microwave radio system uses directional antennas to transmit and receive microwave signals. These directional antennas are usually circular or rectangular in shape, are generally located outdoors, and are usually mounted with the Aeras WaveLink on a tower or mast.

The Aeras WaveLink is classified as a fixed installation product, and per FCC (Federal Communications Commission) policy guidelines regarding maximum permissible exposure (MPE), antennas used for this Aeras Networks radio must be installed to provide a separation distance of 2 m (79 in.) or more from all persons during normal operation to satisfy FCC RF exposure limits. As the Aeras WaveLink is typically mounted on a building or mast high enough to clear ground-level path obstructions, the general population will be further than 2 m (79 in.) from the radio antenna, and the FCC RF exposure limits will be met.

Aeras Networks, Inc. fully supports the FCC's adopted MPE limits, and recommends that personnel stay 2 m (79 in.) from the front of all directional microwave antennas. Should you have questions about Aeras WaveLink microwave signal radiation, please contact the Aeras Networks Customer Support.

Regulatory Information

FCC Compliance

The Aeras WaveLink is FCC certified for use in the 5.3 GHz and 5.8 GHz unlicensed bands in the United States.

The 5.3 GHz version of the Aeras WaveLink is certified under FCC part 15.407, U-NII regulations covering the frequency band of 5250-5350 MHz.

5.3 GHz (5.25-5.35 GHz)

When deployed in an area regulated by the FCC, 5.3 GHz Aeras WaveLink radios are equipped with an integral antenna only, and operate under the FCC Part 15, subpart E, U-NII license-exempt regulations, which certify the radios for –1.0 dBm average, or +7.4 dBm peak transmit power. The 5.3 GHz Aeras WaveLink radios have been FCC certified in the following configuration:

- Aeras WaveLink, 5.3 GHz, integral antenna

5.8 GHz (5.725-5.825 GHz)

When deployed in an area regulated by the FCC, 5.8 GHz Aeras WaveLink radios operate under the FCC Part 15.247 band regulations, which certify the radios for +16 dBm average or +24.1 dBm peak transmit power for intentional radiators in a point-to-point configuration. The 5.8 GHz Aeras WaveLink radios are equipped with an integral or an external antenna. The 5.8 GHz Aeras WaveLink radios have been FCC certified in the following configurations:

- Aeras WaveLink, 5.8 GHz, integral antenna
- Aeras WaveLink, 5.8 GHz, 2 ft. (61 cm) external Radio Waves, Inc. Model SP2-5.2 parabolic antenna
- Aeras WaveLink, 5.8 GHz, 2 ft. (61 cm) external Gabriel Electronics, Inc. Model SSP2-52B parabolic antenna
- Aeras WaveLink, 5.8 GHz, 4 ft. (122 cm) external Gabriel Electronics, Inc. Model SSP4-52B parabolic antenna

Other Regulation Compliance

Other countries have varying RF licensing and operating requirements, and it is imperative that operators and professional installers ensure that the Aeras WaveLink is configured and installed per regional regulations.

For instance, ETSI I-ETS 300 440 describes the bands that the Aeras WaveLink is permitted to operate in, and limits transmissions to 25 milliwatts EIRP (Power Class 9).

Related Documentation

All Aeras Networks manuals are available in an online format on our protected Internet site. To order user documentation, please contact Aeras Networks, Inc. Sales department online at http://www.aerasnetworks.com.

Updates to this manual will be posted on the Aeras Networks, Inc. Customer Support website at http://www.aerasnetworks.com/custsupport. Registered Aeras Networks customers can access the Aeras Networks online information and support service, available 24 hours a day, seven days a week. The Aeras Networks online service provides users with a wealth of up-to-date information, with documents being added or updated each month.

Customer Support Services

Aeras Networks has regional Customer Support centers that handle day-to-day customer issues. Each center is staffed with a local technical support group. The exact services to be performed by the Aeras Networks Customer Support department are specified in a support contract. Below is an example of the types of services available:

- Telephone support
- Site surveys
- Installations
- Off-line and online commissioning
- Network integration activities
- Troubleshooting and fault isolation
- Escalation of problems to appropriate Aeras Networks technical departments

Aeras Networks can physically perform all or a portion of these processes for the operator, as specified in the support contract. The Customer Support department can also provide documentation outlining corrective and preventive maintenance procedures and troubleshooting guides for fault isolation.

Contact your local Sales Support office, or Aeras Networks headquarters directly via the Internet at http://www.aerasnetworks.com.

If possible, please have the following information available when making a call:

- Site number or name
- Full description of product(s) (e.g., model and part number) and configuration
- Serial number of product(s)
- Purchase order number
- Contact name and telephone number
- Ship to address
- Bill to address

For support on installing or configuring all Aeras Networks equipment, contact your Regional Aeras Networks Customer Support Center at:

- +1.888.592.7205 or usa_support@aerasnetworks.com -- North and South America, Europe, Africa, and Middle East

or via the Internet at http://www.aerasnetworks.com/custsupport.

Return Materials Authorization

In the event that a depot repair or hardware replacement is required after contacting Customer Support, please contact Aeras Networks for return authorization. The following information is required by Aeras Networks:

- Full description of the product(s): model and part number
- Serial number of the product(s)
- Purchase order number
- Quantity that needs to be returned to Aeras Networks, if applicable
- Description of observed problem

All Aeras Networks products carry a one year manufacturing warranty from the date of shipment. At the time of a request for a return authorization, if the product has exceeded the warranty period, Aeras Networks will require a new purchase order number to cover the cost of non-warranty repair.

Contact Sales Operations via the Internet at http://www.aerasnetworks.com or email at rma@aerasnetworks.com.

Training

Aeras Networks has developed an extensive series of training courses designed to teach you how to use our products. The courses are developed by a combination of subject matter experts and training specialists in order to create highly technical materials in modern training format. Each of our course offerings are designed around specific learning objectives that keep our classes on track to learning specific job skills related to Aeras Networks products.

The Aeras Networks training catalog contains a listing of the Aeras Networks training services available along with descriptions of each course. Our training materials are divided into specific subsystem training series, depending upon the topic and job requirements.

Contact Customer Support via the Internet at http://www.aerasnetworks.com or email at training@aerasnetworks.com.

Conventions Used in this Manual

The following type and style conventions are used in this manual:

Table 1 Conventions Used in This Manual

Convention	Meaning
Body text	Used for regular body text
Bold	Indicates a menu or button choice
`Command`	Indicates computer generated text and prompts
`User Input`	Indicates user input
`<hostname>`	In command syntax, indicates user-specified command line parameters
`<variable>`	In body text, indicates user-specified command line parameters
`[BRACKETS]`	Indicates a key on the keyboard or instrument
NOTE	Provides relevant additional information
!	Provides important warning information that may affect operation of or maybe a potential threat to the system
STOP	Used to tell the reader to **STOP** what they are doing and to read important instructions that are vital to prevent equipment or software damage

One

System Description

This chapter contains a functional description of the Aeras WaveLink product family, and contains the following sections:

- Section 1-1, General
- Section 1-2, System Overview
- Section 1-3, Features
- Section 1-4, Aeras WaveLink Basic Structure
- Section 1-5, Typical Applications

Welcome to the Aeras Networks WaveLink Series product family. This manual is designed to introduce you to the Aeras WaveLink products, and to provide you with information necessary to plan, install, operate and maintain a Aeras WaveLink wireless communication system.

The Aeras WaveLink is intended for professional installation only. However, this manual is also designed for personnel who plan, operate and administer the Aeras WaveLink communication system. Please review the entire manual before powering up or deploying any Aeras WaveLink.

1-1 General

1-1.1 Products

The Aeras WaveLink family comprises two separate products, the Aeras WaveLink-DSX, and the Aeras WaveLink-ITU. The Aeras WaveLink products are cost-effective, all-outdoor, pole-mounted, high-capacity, line-of-sight (LOS) digital radio transmission systems, each operating in the license-exempt 5.25-5.35 GHz (5.3 GHz) or 5.725-5.825 GHz (5.8 GHz) frequency bands. The Aeras WaveLink can be used for the following applications: point-to-point or building-to-building, WLL (wireless local loop), backup solutions, temporary links, and mesh cellular backhaul.

- The 5.3 GHz Aeras WaveLink-DSX DS-3 and 10/100 versions conform to the FCC (Federal Communications Commission) Part 15.407 Subpart E describing U-NII (Unlicensed National Information Infrastructure) operation. It operates at up to -1.0 dBm average transmit power, and is intended for short-distance use.
- The 5.8 GHz Aeras WaveLink-DSX DS-3 and 10/100 versions conform to the FCC Part 15.247 describing intentional radiators. It operates at up to +16 dBm average power, and is intended for use over longer distances.

- The 5.3 GHz Aeras WaveLink-DSX DS-3 and 10/100 versions can operate at up to +10.0 dBm average transmit power, and are intended for short-distance use.
- The 5.8 GHz Aeras WaveLink-DSX DS-3 and 10/100 versions can operate at up to +16.0 dBm average transmit power, and are intended for short-distance use.
- The 5.8 GHz Aeras WaveLink-ITU E3 and 10/100 versions conform to ETSI (European Telecommunications Standards Institute) Power Class 9 operation. They operate at up to 25 milliwatts peak EIRP (Equivalent Isotropic Radiated Power).
- The 5.3 GHz Aeras WaveLink-ITU E3 and 10/100 versions can operate at up to +10.0 dBm average transmit power, and are intended for short-distance use.
- The 5.8 GHz Aeras WaveLink-ITU E3 and 10/100 versions can operate at up to +16.0 dBm average transmit power, and are intended for use over longer distances.

All Aeras WaveLink-DSX versions provide either a standard DS-3 (44.736 Mbps) interface adhering to Bellcore GR-499-CORE (DSX-3) standards, or provide two Ethernet 10/100Base-T interfaces adhering to IEEE 802.3 standards, with a combined nominal line rate of 45 Mbps.

All Aeras WaveLink-ITU versions provide either a standard E3 (34.368 Mbps) interface adhering to ITU-T G.703 standards, or provide two Ethernet 10/100Base-T interfaces adhering to IEEE 802.3 standards, with a combined nominal line rate of 35 Mbps.

Each Aeras WaveLink is powered by an external ±21 to ±60 VDC power supply.

1-1.2 Applications

The Aeras WaveLink product line is designed to serve the following communications markets:

- Internet Access and Backhaul Systems: Used by Internet Service Providers (ISPs).
- Private Networks: Wireless Bridged LANs and WANs.
- PCS/PCN and Cellular Networks: High speed links between base stations.
- Wireless Local Loop Networks: Fixed wireless, used by Local Exchange Carriers (LECs).
- Business Bypass or Local Exchange Bypass: Provided by Competitive Access Providers (CAPs) and Competitive Local Exchange Carriers (CLECs).
- When used with Aeras Networks WaveStream Switches, the Aeras WaveLink can provide the radio links in a self-healing wireless mesh backhaul network to support broadband communications, including DSL (Digital Subscriber Line) and Cellular over ATM (Asynchronous Transfer Mode).

1-2 System Overview

Each Aeras WaveLink consists of a Aeras WaveLink radio, with integral antenna or an optional external antenna, as shown in Figure 1-1, along with external power and data cabling. In a typical installation, the Aeras WaveLink radio and antenna are mounted

outdoors, usually on a tower or building. If so equipped, the external antenna connects to the Aeras WaveLink radio through a factory-supplied coaxial cable.

See Figure 1-1. A radio system, or link, contains two Aeras WaveLink radios each equipped with either an integral or external antenna, installed at each end of the link, separated by a line of sight transmission path. Frequency band, terrain, actual line-of-sight and environmental conditions influence the range of operation and path performance.

The Aeras WaveLink carries one full-duplex DS-3, E3, or Ethernet channel, and is powered by a 30-watt external ±21 to ±60 VDC power supply.

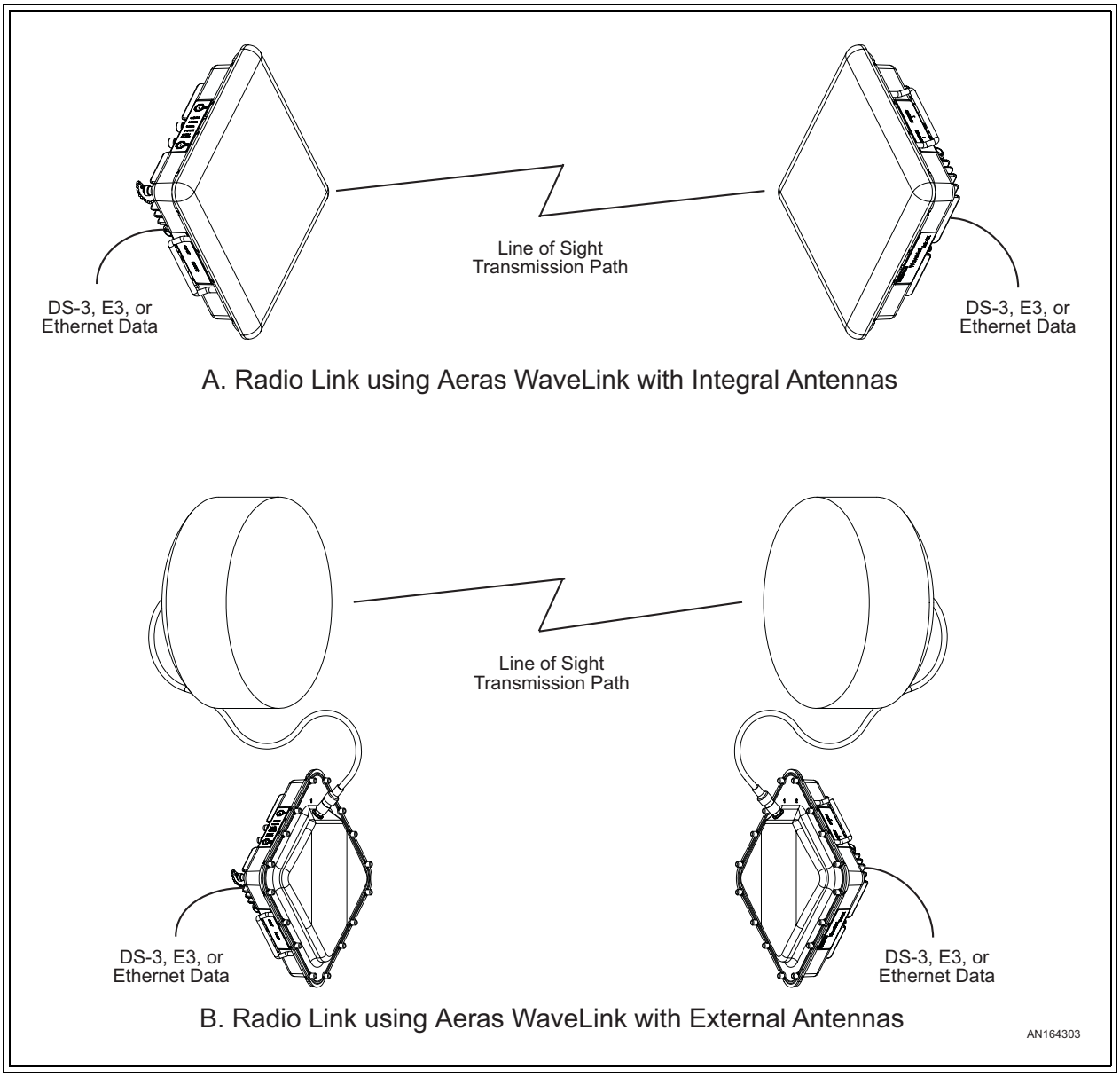

Figure 1-1 Typical Radio Link Configurations

Because the Aeras WaveLink can be ordered in two different bands, with high and low channels, and can be installed with horizontal or vertical polarization, up to eight Aeras WaveLinks can be mounted at a each hub, or node, to form part of a star or mesh network. See Figure 1-2.

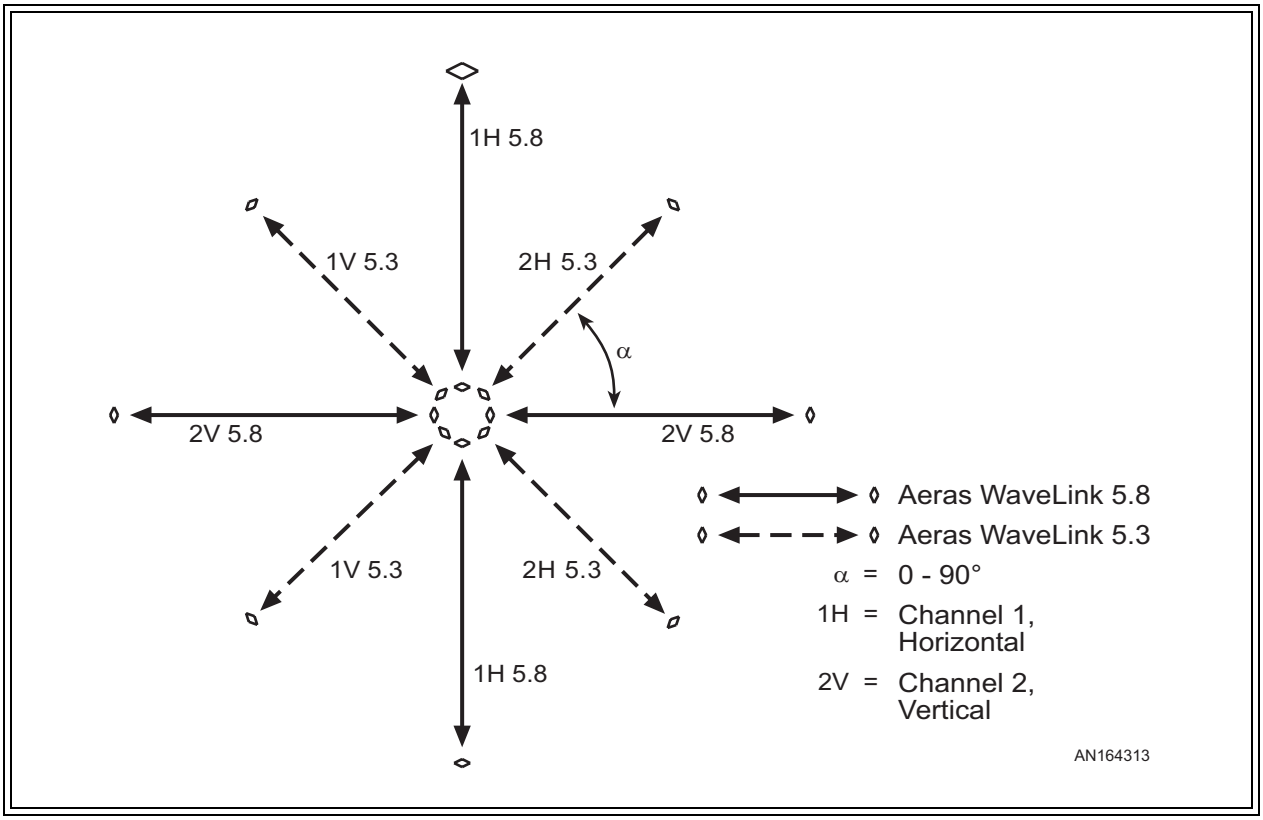

Figure 1-2 Aeras WaveLink 5.3 and 5.8 Star Network

1-3 Features

The Aeras WaveLink offers the following features:

- Robust outdoor all-outdoor enclosure.
- Integral or external antenna.
- Sturdy radio mounting systems for quick, accurate and reliable integral antenna alignment.
- Operates in the license-exempt 5.725-5.825 GHz (5.8 GHz) or 5.25-5.35 GHz (5.3 GHz) bands.
- Full-duplex transmission:
  - DS-3 (DSX-3, per Bellcore GR-499-CORE)
  - E3 (per ITU G.703)
  - Ethernet 10/100Base-T (per IEEE 802.3)
- Easy configuration, installation, operation, and maintenance.
- Integral web server for configuring, operating, and monitoring using an HTML-based web browser GUI.
- Ethernet interface used with NMSs (Network Management Systems) or EMSs (Element Management Systems) using SNMP (Simple Network Management Protocol) traps. Supports MIB-II (Management Information Base II) and Aeras Networks enterprise MIB.
- ATPC (Automatic Transmit Power Control).
- Self Test, BER test mode, RF and digital loopbacks.
- Reed Salomon Forward Error Correction (FEC).
- Operating and backup software versions contained in Aeras WaveLink memory, operator-selectable.

1-4 Aeras WaveLink Basic Structure

1-4.1 Radio Links

Each radio link includes two Aeras WaveLink terminals. Each terminal consists of a Aeras WaveLink radio with an integral flat-panel antenna, or a Aeras WaveLink radio with an external antenna (see Figure 1-1). Generally, the Aeras WaveLink terminals are mounted outdoors on a tower or building.

1-4.2 Data Stream

The DS-3, E3, or Ethernet data signals enter the Aeras WaveLink, and are modulated into the RF data stream. The RF radio signal radiates from the local antenna and propagates to the remote antenna. At the remote terminal, the received signal is demodulated and demultiplexed, separating the payload data and the overhead management data.

1-4.3 Aeras WaveLink Models

The Aeras WaveLink is manufactured in many configurations:

- Versions with DS-3 or Ethernet carried over 5.3 GHz or 5.8 GHz links.
- Versions with E3 or Ethernet carried over 5.3 GHz or 5.8 GHz links.
- Each version available with either an integral 30 x 30 cm (12 x 12 in.) antenna, or with an N-type connector for a factory-supplied 61 cm (2 ft.) or 122 cm (4 ft.) external antenna, or with an N-type connector for a customer-supplied external antenna.

Aeras WaveLink models are described in Table 1-1.

Table 1-1 Aeras WaveLink Models

Model	Transmit Band	Frequency Band	Link Carries	Antenna
M100746-101 M100747-101	Low High	5.25-5.35 GHz	DS-3	Integral (Note 1)
M100746-102 M100747-102	Low High	5.25-5.35 GHz	DS-3	External, 61 or 122 cm (2 or 4 ft.), or External, customer-supplied
M100748-101 M100749-101	Low High	5.725-5.825 GHz	DS-3	Integral (Note 2)
M100748-102 M100749-102	Low High	5.725-5.825 GHz	DS-3	External, 61 or 122 cm (2 or 4 ft.), or External, customer-supplied (Note 2)
M100746-201 M100747-201	Low High	5.25-5.35 GHz	Ethernet (45 Mbps)	Integral (Note 1)

Table 1-1 Aeras WaveLink Models (continued)

Model	Transmit Band	Frequency Band	Link Carries	Antenna
M100746-202 M100747-202	Low High	5.25-5.35 GHz	Ethernet (45 Mbps)	External, 61 or 122 cm (2 or 4 ft.), or External, customer-supplied
M100748-201 M100749-201	Low High	5.725-5.825 GHz	Ethernet (45 Mbps)	Integral (Note 2)
M100748-202 M100749-202	Low High	5.725-5.825 GHz	Ethernet (45 Mbps)	External, 61 or 122 cm (2 or 4 ft.), or External, customer-supplied (Note 2)
M100746-301 M100747-301	Low High	5.25-5.35 GHz	E3	Integral
M100746-302 M100747-302	Low High	5.25-5.35 GHz	E3	External, 61 or 122 cm (2 or 4 ft.), or External, customer-supplied
M100748-301 M100749-301	Low High	5.725-5.825 GHz	E3	Integral
M100748-302 M100749-302	Low High	5.725-5.825 GHz	E3	External, 61 or 122 cm (2 or 4 ft.), or External, customer-supplied
M100746-401 M100747-401	Low High	5.25-5.35 GHz	Ethernet (35 Mbps)	Integral
M100746-402 M100747-402	Low High	5.25-5.35 GHz	Ethernet (35 Mbps)	External, 61 or 122 cm (2 or 4 ft.), or External, customer-supplied
M100748-401 M100749-401	Low High	5.725-5.825 GHz	Ethernet (35 Mbps)	Integral
M100748-402 M100749-402	Low High	5.725-5.825 GHz	Ethernet (35 Mbps)	External, 61 or 122 cm (2 or 4 ft.), or External, customer-supplied
(TBD) (TBD)	Low High	5.725-5.825 GHz, ETSI Version	E3	Integral (Note 3)
(TBD) (TBD)	Low High	5.25-5.35 GHz, ETSI Version	Ethernet (35 Mbps)	Integral (Note 3)

Notes:

1. These models are the only versions FCC certified for -1.0 dBm average transmit power.
2. The integral antenna and 61 or 122 cm (2 or 4 ft.) external antenna models are the only versions FCC certified for +16.0 dBm average transmit power.
3. These models are the only versions ETSI certified for 25 milliwatts EIRP.

1-4.4 Mounting and Antenna Alignment

To ensure proper mounting and antenna alignment Aeras Networks sells mounting brackets designed for use with the Aeras WaveLink. The single bracket mounts one Aeras WaveLink, while the dual bracket mounts two Aeras WaveLinks back-to-back. Both brackets are designed to provide rugged mounting for the Aeras WaveLink, while allowing fine adjustment for antenna alignment.

1-4.5 Interface Connectors and Indicators

See Figure 1-3 for a view of the Aeras WaveLink external connectors and indicators. The Aeras WaveLink connectors and indicators are described in Table 1-2.

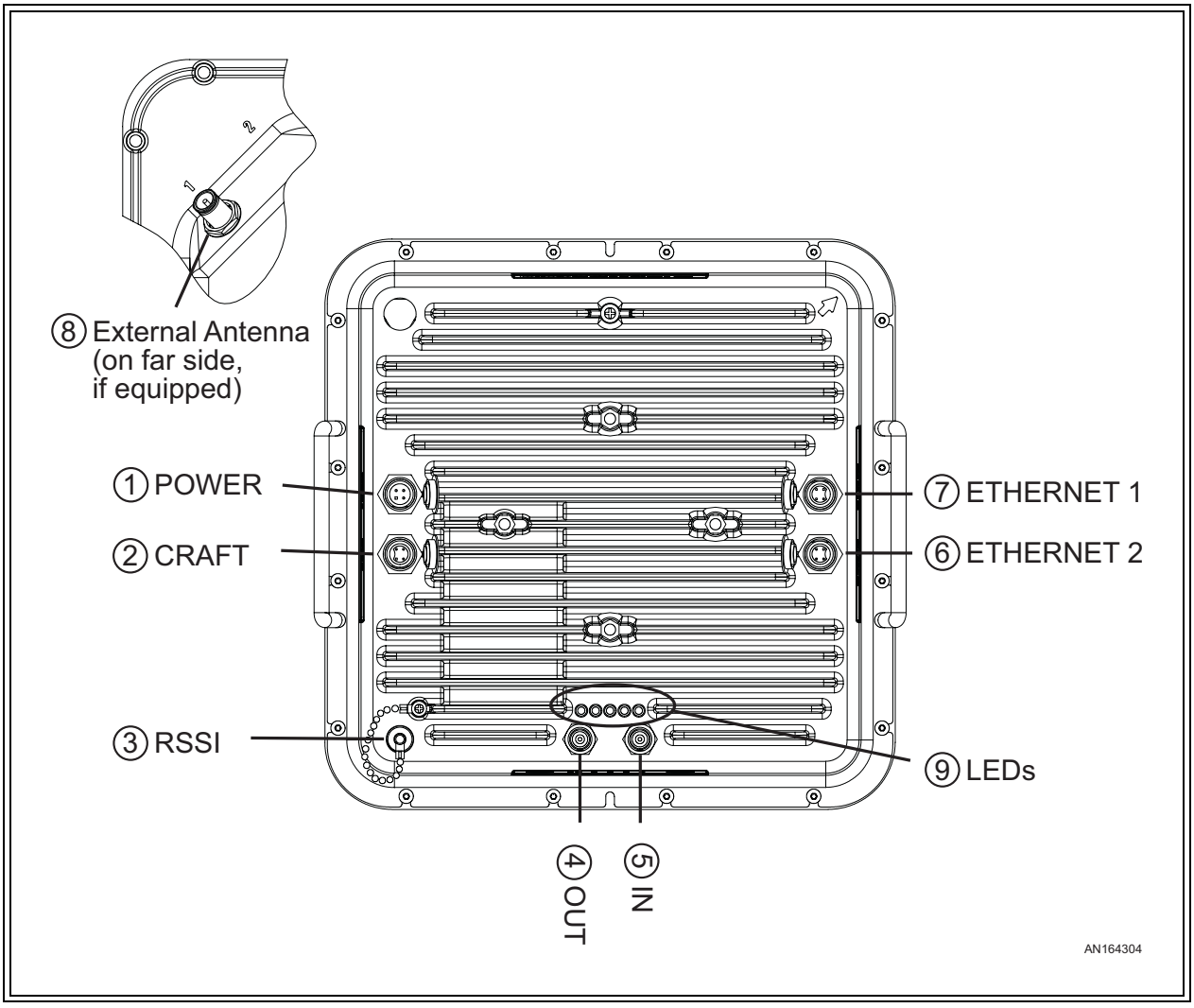

Figure 1-3 Aeras WaveLink Interface Connectors and Indicators

Table 1-2 Aeras WaveLink Interface Connectors and Indicators

No.	Name	Component	Description	From	Note
1	POWER	Male 4-Pin Circular Connector	Power input plug	Power Supply	Accepts ±21 to ±60 VDC
2	CRAFT	Female 4-Pin Circular Connector	RS-232 receptacle	Asynchronous laptop port	1200 to 115,200 baud, used only for tech support troubleshooting
3	RSSI	Female BNC Connector	Receive Signal Level Indicator	Voltmeter	Verifies RF signal strength, used to align antenna
4	OUT	Female TNC Connector	DS-3 or E3 data from the radio link	DS-3 or E3 data equipment	--
5	IN	Female TNC Connector	DS-3 or E3 data to the radio link	DS-3 or E3 data equipment	--
6	ETHERNET 2	Female 4-Pin Circular Connector	10/100Base-T transmit and receive receptacle	Ethernet equipment	For Ethernet data or link to SNMP or Web manager, or use to daisy-chain Ethernet port to next Aeras WaveLink in cascade
7	ETHERNET 1	Female 4-Pin Circular Connector	10/100Base-T transmit and receive receptacle	Ethernet equipment	(Same as ETHERNET 2)
8	ANTENNA PORT (Opt.)	Female N-type Connector	50 Ohm RF receptacle	External antenna	Only equipped on external-antenna models, on far side of chassis
9	PWR/LCL ALM RF LINK DATA ENET 2 ENET 1	Green LED Green LED Green LED Green LED Green LED	Power/Local Alarm Status Radio Link Status DS-3/E3 Status Ethernet Status Ethernet Status	--	ON = Power OK, no alarm, Flashing = Local alarm, OFF = Power off. ON = Rcv. OK, OFF = Link Alarm. ON = OK (no LOS), OFF = LOS. ON = OK, Flashing = data, OFF = No conn. ON = OK, Flashing = data, OFF = No conn.
Note: For connector pinouts, refer to Appendix 1.					

1-4.6 Cables

To ensure longevity in a outdoor environment, Aeras Networks sells various cables designed for use with the Aeras WaveLink. Aeras Networks offers the following weather-resistant cables:

- DS-3, E3, and Ethernet data cables and the power cables are offered in 25 m (82 ft.), 50 m (164 ft.), and 100 m (328 ft.) lengths.
- A 6 m (19.7 ft.) Ethernet cable is available to route the Ethernet signal between two Aeras WaveLinks in the same location, or when you are configuring the Aeras WaveLink from a Craft PC.
- For models to be used with external antennas, a 2 m (6.6 ft.) N-to-N RF cable is available to connect the external antenna to the Aeras WaveLink.
- A 6 m (19.7 ft.) RS-232 4-pin Circular-to-DB9 Craft cable is available to connect a Craft PC to a Aeras WaveLink for future CLI applications.
- When the Aeras WaveLink is to be used with a Aeras WaveStream Switch for a mesh backhaul network, a 6 m (19.7 ft.) dual TNC-to-TNC cable is available to connect each Aeras WaveStream Switch to a Aeras WaveLink.

NOTE ☛ All of the cables described above include weather-resistant connectors and moisture-excluding gel inside the cable sheaths. For this reason, Aeras Networks recommends that customers and installers not attempt to shorten or splice the factory-supplied cables.

1-4.7 Integral Antenna

The integral antenna is a 30 cm x 30 cm (12 in. x 12 in.) flat-panel antenna mounted directly on the Aeras WaveLink radio chassis, as shown in Figure 1-4. All RF connections between the integral antenna and the Aeras WaveLink radio are made internally, eliminating the need for external coaxial cabling. Because the integral antenna is sealed onto the Aeras WaveLink chassis, the Aeras WaveLink and integral antenna are mounted as a unit, and share the same environmental protection. An arrow on the connector side of the Aeras WaveLink chassis indicates the antenna polarization (either vertical or horizontal).

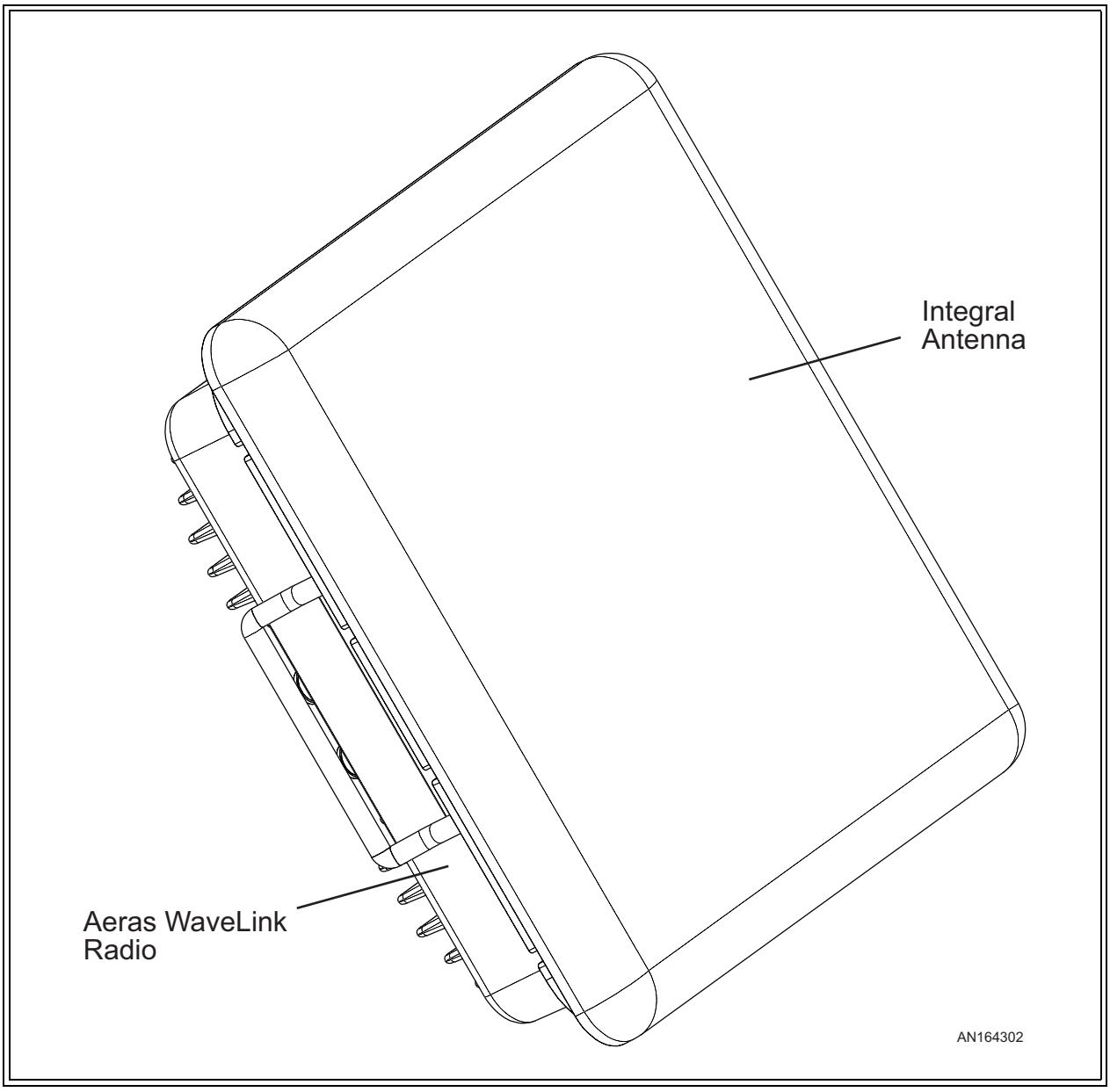

Figure 1-4 Integral Antenna and Aeras WaveLink Radio

1-4.8 External Antenna

Some Aeras WaveLink models use an external antenna to radiate and receive RF signals. The antenna attaches to the Aeras WaveLink via a factory-supplied cable. The following sections describe factory- and customer-supplied external antennas.

Factory-Supplied

The following external antennas are offered for use with the Aeras WaveLink:

- 61 cm (2 ft.) parabolic type
- 122 cm (4 ft.) parabolic type

Figure 1-5 shows a typical 61 cm external antenna with N-type connector cabled to the Aeras WaveLink radio.

The antenna type should be selected according to local regulatory rules and system gain requirements.

For the available antenna models refer to Table 1-3. Complete antenna specifications are provided in Appendix 2.

Table 1-3 Antenna Models

Model	Description
091-455524	Parabolic antenna, 5.3 or 5.8 GHz, 61 cm (2 feet)
091-455548	Parabolic antenna, 5.3 or 5.8 GHz, 122 cm (4 feet)

Customer-Supplied

The Aeras WaveLink can be ordered with a coaxial cable to be connected to a customer-supplied external antenna. In this case, refer to the external antenna user documentation for specifications and model numbers.

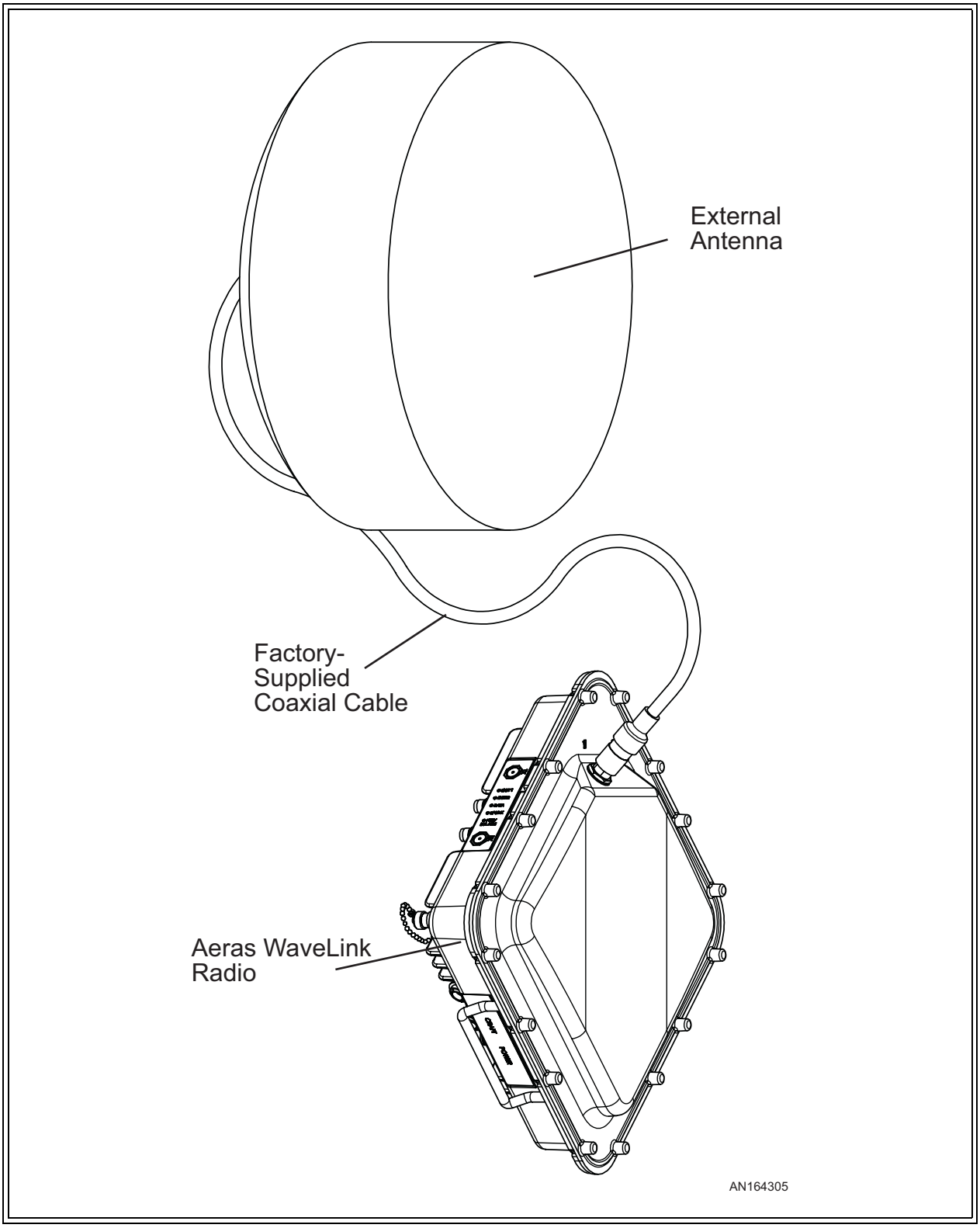

Figure 1-5 Typical Factory-Supplied External Antenna and Aeras WaveLink Radio

1-4.9 Configuration, Operation, and Monitoring

The Aeras WaveLink and radio link are configured, operated and monitored through one of five user interfaces. The five interfaces are:

- A built-in web server GUI hosted by the Aeras WaveLink, which can be accessed by any local or remote computer equipped with a web browser. This is the interface most operators will use to interact with the Aeras WaveLink. The web browser can access the Aeras WaveLink built-in web server through either the ETHERNET 1 or ETHERNET 2 port.

> **NOTE** Note that the ETHERNET 1 and ETHERNET 2 ports are functionally equivalent, and that they are both served by an onboard Ethernet controller. The controller automatically switches polarity on the transmit and receive pairs when they are reversed, eliminating the need for crossover cables.

- SNMP traps, which communicate with MIB-II compliant NMSs (Network Management Systems) and EMSs (Element Management Systems). This interface is used by operators who want real-time notification of radio problems. The Aeras WaveLink sends SNMP traps to NMSs and EMSs over Ethernet links through either the ETHERNET 1 or ETHERNET 2 port.
- An ASCII command line interface, accessible through the RS-232 CRAFT port, or through the ETHERNET 1 or ETHERNET 2 port using telnet. This interface is primarily used by Aeras Networks technical support personnel when performing detailed troubleshooting.
- The RSSI port, providing a DC voltage level proportionate to the received RF signal level, and allowing installers to use a DC voltmeter to fine-tune antenna alignment. This interface is primarily used during installation, but the current RSSI measurement is also available via the Aeras WaveLink built-in web server or via SNMP polls.
- Five LEDs that provide visual alarm status. They verify proper operation of the Ethernet ports, DS-3/E3 ports, and radio link, and indicate proper power input and radio operation. These LEDs are usually used during installation to provide a quick product verification.

1-4.10 SNMP

The Aeras WaveLink radio supports SNMP network management. SNMP is a protocol that defines the method of communicating with and controlling network devices.

Devices that support the SNMP protocol can be queried for their status and other device information. Some devices allow changing device settings or configurations using SNMP commands. The device settings and other device data are available as variables. They are defined in the standard Management Information Base (MIB) file, provided by the device manufacturer. The SNMP manager uses a database to hold lists of variables that can be accessed for each device on the network. The device data can be displayed in tables, graphs, or saved in a file.

1-4.11 Aeras WaveLink Network Management Architecture

Aeras WaveLink software network management is comprised of two main items:

- SNMP based Network Management System (NMS) application in the network management workstation.
- SNMP agent in the Aeras WaveLink.

The workstation manages all Aeras WaveLinks assigned unique IP addresses. The workstation also provides a graphical display of the network objects showing the status, performance, and configuration parameters of each Aeras WaveLink radio.

The SNMP local agent is a standard MIB-II compliant software module that resides in each Aeras WaveLink. The agent collects information from different Aeras WaveLink components as defined in the Management Information Base (MIB) structure. The Aeras WaveLink incorporates both standard and private MIBs.

Different Aeras WaveLinks are distinguished by their customer-assigned IP addresses. The Web browser communicates with the Aeras WaveLink using TCP/IP (Transmission Control Protocol/Internet Protocol) and HTTP (Hyper Text Transfer Protocol).

The NMS data transfer between the manager and the agents is accomplished using either polling or trapping techniques.

Polling

The NMS polls each Aeras WaveLink SNMP agent at specific intervals. These are set according to user requirements during SNMP NMS configuration.

Traps

The Aeras WaveLink agent sends an SNMP trap to the manager whenever a predefined event occurs. Groups of traps can be defined according to their level of severity. The operator can choose to enable or disable any traps or group of traps according to their level of severity (and his or her own security level). Traps can be logged using any standard SNMP manager.

1-4.12 NMS Connectivity

The NMS workstation can access any Aeras WaveLink using its IP address. The NMS workstation can connect to each Aeras WaveLink using any of the following methods:

- 10/100 Base-T Ethernet - accessing Aeras WaveLinks via a LAN through hubs, switches or routers.
- Cascading Ethernet links transport NMS information between colocated Aeras WaveLinks. This is done by daisy-chaining the ETHERNET 1 and ETHERNET 2 ports between Aeras WaveLink radios using straight-pinned or crossover Ethernet cables.

1-4.13 Web-Based GUI Access Security

Access to the Web-based GUI (graphical user interface) is limited by username and password, which is available at different levels of security as follows:

- User - Read only privilege.
- Administrator - Read/partial write privilege. The administrator cannot cause a radio link to reset by changing critical parameters.
- Supervisor - Full read/write privilege.

1-4.14 GUI Functions

The Web-based GUI monitors and controls the main functions of the Aeras WaveLink. These functions are listed below and detailed in the following sections:

- Configuration management
- Status and fault management
- Test activation and monitoring
- Software downloading
- Performance monitoring

Refer to Appendix 3 for Aeras WaveLink GUI operating instructions.

Configuration Management

The NMS software can be used to configure the parameters of the Aeras WaveLink radio, although this is normally done using a web browser GUI. This includes the setup of templates with predetermined default values, relating to both the parameters of common element types and the validation of parameter values. It also includes saving and loading configuration files for individual Aeras WaveLink radios. The NMS also controls the uploading and downloading of individual parameter values, and complete configuration setups.

Parameter configuration is terminal-oriented. Every configuration session deals with the Aeras WaveLink as accessed by its particular IP address. Some of the parameters, such as RF channel number, link ID, etc. affect the Aeras WaveLinks on both ends of the radio link. Special care should be taken to activate the new parameter values consistently on both ends of the radio link.

Status and Fault Management

Status and fault management involve a selective display of failures alerting the user to take actions according to a decision making tree.

Some status indications and alarms may report conditions that pertain to both ends of the radio link. These ends are commonly referred to as local and remote.

> **NOTE**
> Note that the 'local' system is the Aeras WaveLink you are logged into, and the 'remote' Aeras WaveLink is the one at the far end of the radio link. Thus, when you are logged into the far end Aeras WaveLink on a radio link that terminates at your current physical location, the far end Aeras WaveLink is 'local' and the near end Aeras WaveLink is 'remote'.

Test Activation and Monitoring

Following is a brief description of the tests that can be invoked and monitored by the Web based NMS.

Loopbacks

The loopbacks are incorporated into the radio to assist in detecting equipment/component/ cable failure during both installation and normal operations. Loopbacks are user initiated. The Aeras WaveLink DS-3 and E3 versions support RF and various interface loopbacks. (Note that loopbacks are not supported on the Aeras WaveLink Ethernet versions, as any loopback could result in an immediate data storm. Instead, Aeras Networks that customers use external equipment to Ping (use Packet Internet Groper) to test their Ethernet paths.)

BER Test

The following Bit Error Rate (BER) test is provided by the DS-3 and E3 Aeras WaveLink versions:

- Pseudo random signal generator - capable of inserting a standard test signal for BER measurements, and local- and remote-end loopback functions.
- BER measurements of radio link performance under normal operating conditions.

Software Downloading

The Web-based user interface enables off-line operation and SNMP updates of files. Alternatively, when on-line, configuration can be updated from the NMS to the Aeras WaveLink agent. Another way to upgrade multiple Aeras WaveLinks is to use FTP (File Transfer Protocol).

Note that the Aeras WaveLink can hold two software loads in memory, which facilitates upgrading and reverting to a previous software version.

Some factory default software settings are always retained at the Aeras WaveLink to safeguard against complete failure of communications caused by equipment restart.

Performance Monitoring

Each Aeras WaveLink gathers various statistics regarding radio link performance. The Web based user interface can retrieve and analyze these statistics upon demand. In addition, the Web based user interface manager processes its own general statistical data, based on the information that is received. Current BER, Receive Signal Strength Indicator (RSSI), and other performance monitors are available for the radio link.

The Web-based user interface is designed to easily interface with optional graph management software packages for sophisticated performance presentation.

1-5 Typical Applications

Aeras WaveLink gives the user great flexibility in setting up point-to-point radio links on a very cost effective basis, because it avoids unnecessary outlays in expensive leased lines or fiber optic land-based lines. Low cost of ownership makes return on investment (ROI) attractive compared to leased lines.

Aeras WaveLink advantages over copper/fiber alternatives include: short installation time, easy maintenance using NMS software, independence of competing PTTs, avoiding the need to secure normal right-of-way and/or physical installation permits, and redeployability to meet changing needs.

The simplicity of the Aeras WaveLink installation makes it easy for the user to implement Aeras WaveLink in a variety of applications. It also means that the user can conveniently move a previously installed Aeras WaveLink to a new location to meet the requirements of a changing system. Aeras WaveLink enables seamless future software upgradability, protecting customer investment, reducing logistics, spare parts and product stocking. The following sections briefly describe typical applications.

1-5.1 Internet (ISP)

The appetite for higher Internet access speeds require faster ISP access and backhaul and ISP connections to businesses. The Aeras WaveLink radio is perfectly suitable for both backbone and direct end-user connectivity.

1-5.2 Private Network Wireless Bridged LANs and WANs

Aeras WaveLink radios are also used to provide communications links for private networks. For companies requiring frequent communications into areas without extensive telecommunications infrastructure or in areas where the cost of local access is high, installing and maintaining a Aeras WaveLink radio network can be very cost effective. Typical users of private networks include: government agencies such as land management, municipal agencies, and universities; large utilities such as oil, gas, and electric concerns; and companies with widely deployed assets such as railroads and timber resource managers.

1-5.3 PCS/PCN and Cellular Networks

Cellular operators mainly use Aeras WaveLink radio links for Base Transceiver Station (BTS) interconnections, BTS to Base Station Controller (BSC), and BSC to BSC interconnections.

1-5.4 Wireless Local Loop Networks and Local Exchange Bypass

Wireless systems in emerging markets were originally deployed to provide premium services to a mobile subscriber base. However, middle and lower income countries have driven mobile network providers into a new business - the substitution of wireless service for fixed service, so-called fixed wireless networks, providing a cost-effective solution in situations where no wireless infrastructure exists. Wireless local loop (last mile) networks are implemented mostly by Local Exchange Carriers (LECs).

Alternative carriers, such as Competitive Access Providers (CAPs) and Competitive Local Exchange Carriers (CLECs) use radio links to establish standard telecommunications links between their customers' sites and their own backbone networks. This way CAPs and CLECs provide their customers with cost-effective local area telephone service and cheaper long distance services.

1-5.5 Business Bypass and Local Exchange Bypass

The Aeras WaveLink radio is a perfect solution for Business Bypass and Local Exchange Bypass applications.

1-5.6 Backhaul for Wireless MTU and MDU Access

The Aeras WaveLink radio can be used as an infrastructure element in wireless Multiple Tenant Unit (MTU) and Multiple Dwelling Unit (MDU) applications, when used with Aeras Networks WaveStream Switch products. Figure 1-6 shows a typical wireless MTU/MDU access configuration.

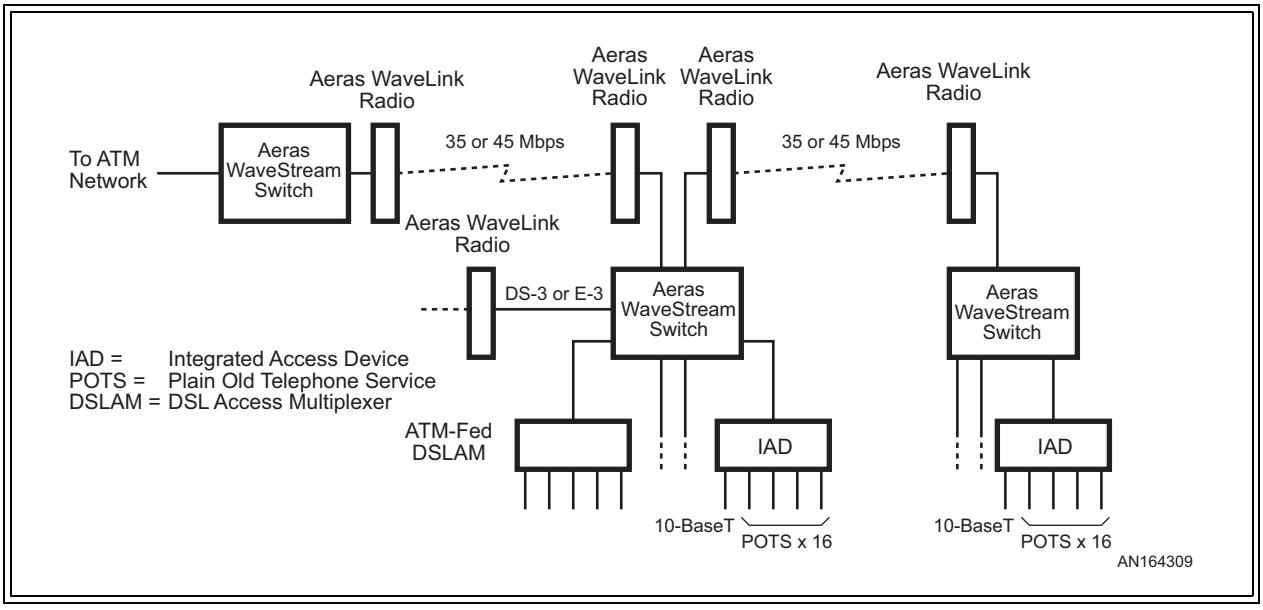

Figure 1-6 Typical Wireless MTU/MDU Access Configuration

1-5.7 Wireless Mesh Backhaul Networks

2.5G and 3G cellular systems, which integrate voice and data, require higher-capacity backhaul, QoS (Quality of Service), BoD (Bandwidth on Demand), ability to dynamically load balance bursty traffic, and provide support for legacy 1G and 2G systems. When used with Aeras Networks WaveStream Switches, the Aeras WaveLink can provide the radio links for a self-healing wireless mesh backhaul network to support broadband ATM communications to support this application. These networks feature high reliability, lower maintenance costs, improved scalability, and enhanced interference mitigation.

DSL providers are typically limited by the quality of existing copper lines to a short distance from the CO (Central Office). To serve customers farther from the CO, DSLAMs (DSL Access Modules) must be used closer to the customer site. The backhaul from DSLAMs to the CO has to be robust to reduce or eliminate downtime, and must have sufficient bandwidth to support DSL traffic. When used with Aeras WaveStream Switches, the Aeras WaveLink can provide the radio links for a self-healing wireless DSLAM mesh backhaul network to support these requirements. See Figure 1-7 for a typical wireless mesh backhaul network.

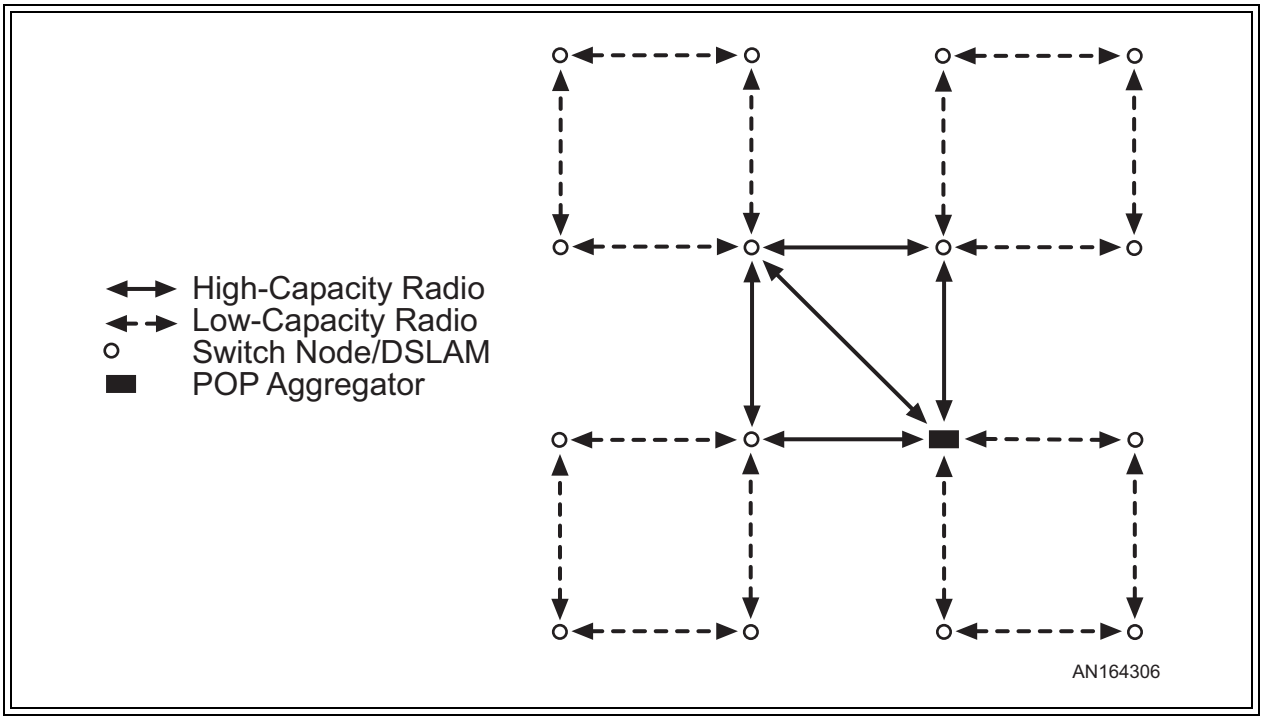

Figure 1-7 Typical Wireless DSLAM Mesh Backhaul Network

1-5.8 Wireless ATM Mesh Distribution with Aeras WaveStream Switch

When used with Aeras Networks WaveStream Switches, the Aeras WaveLink can provide the radio links for a self-healing wireless ATM mesh backhaul network to support broadband communications. These networks feature high reliability, lower maintenance costs, improved scalability, and enhanced interference mitigation. See Figure 1-8 for a typical wireless ATM mesh backhaul network.

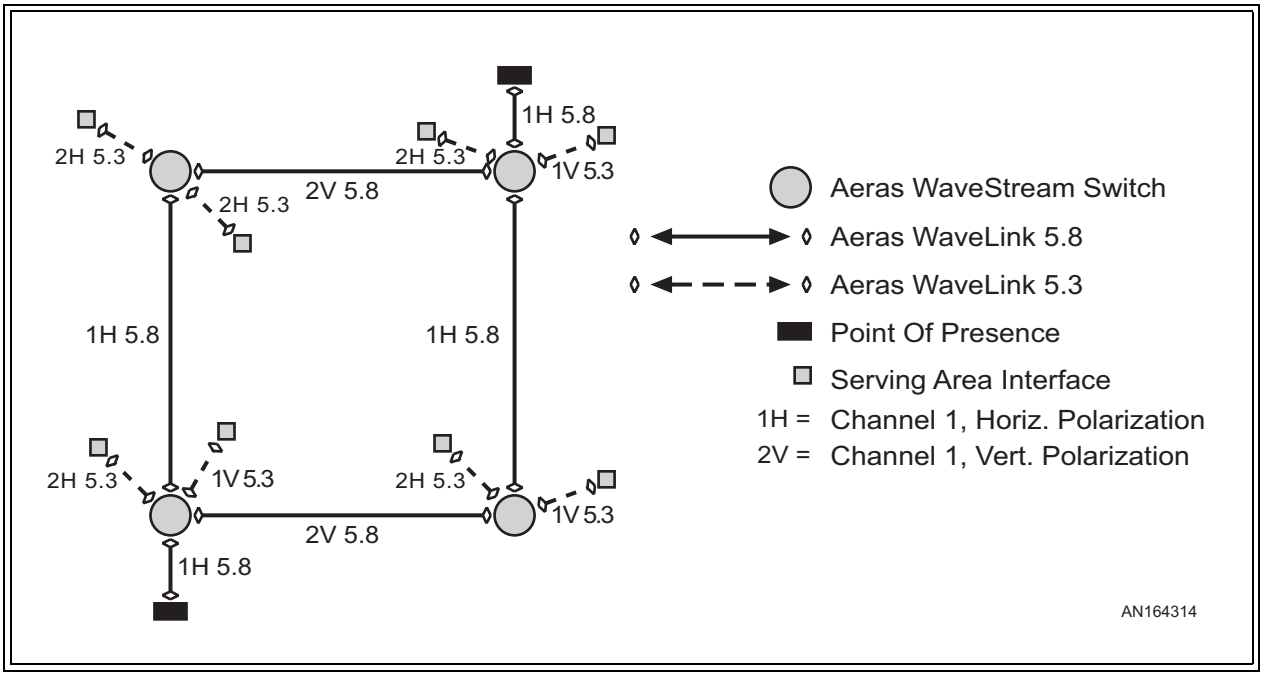

Figure 1-8 Typical Wireless ATM Mesh Backhaul Network

1-6 Specifications

Refer to Appendix 2 for Aeras WaveLink specifications.

(this page intentionally left blank)

Two

Installation Steering Guide

This chapter briefly outlines the complete installation and configuration procedure for the Aeras WaveLink, and a flowchart of this process is given. The topics discussed here are presented in detail in subsequent chapters of this manual.

2-1 Installation Flow Chart

The flow chart in Figure 2-1 includes references to the installation and troubleshooting sections in this manual.

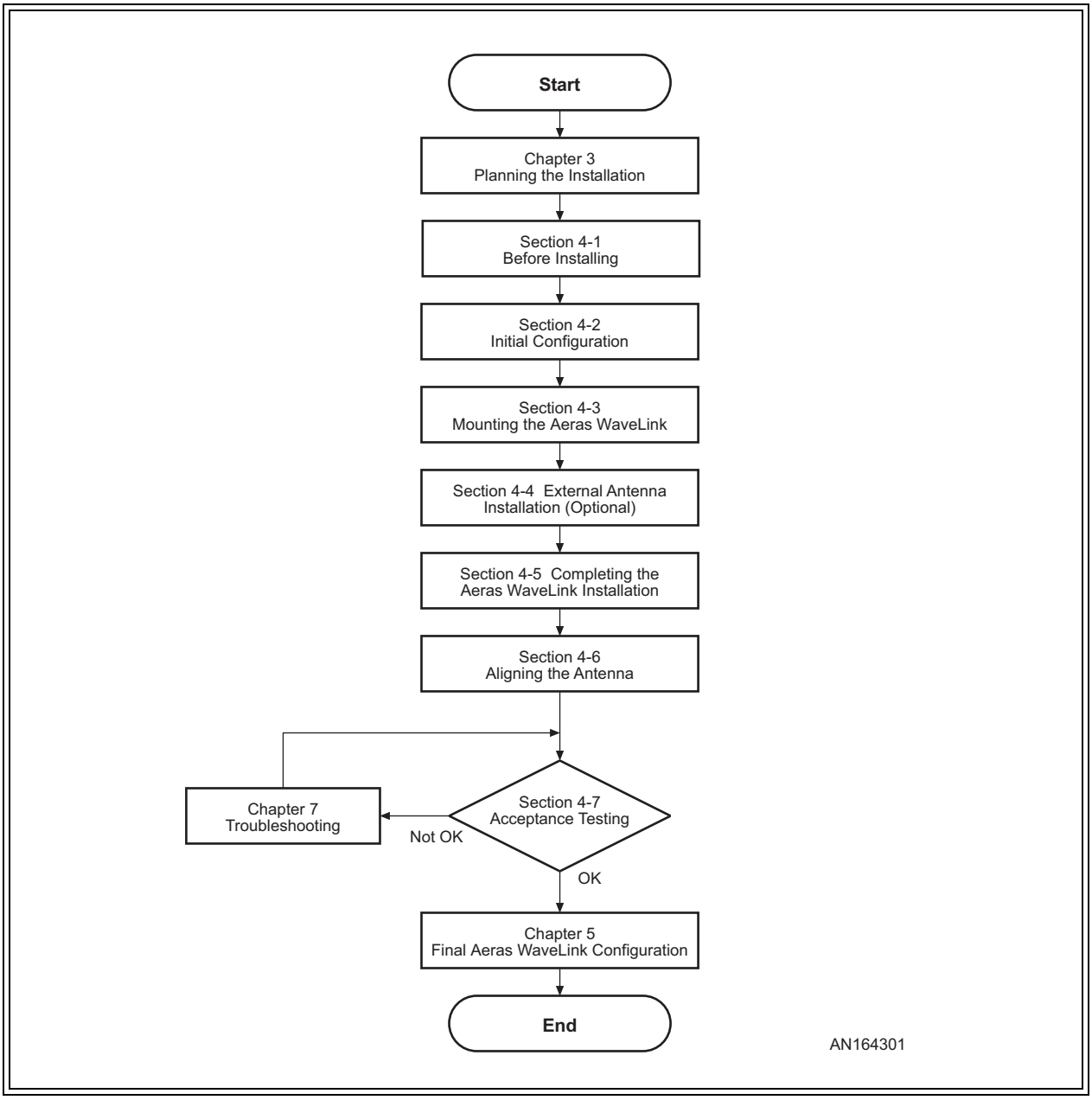

Figure 2-1 Installation Flowchart

Three

Installation Planning

This chapter provides a comprehensive planning guide for Aeras WaveLink installations, and includes a Radio Link Planning Worksheet that should be filled out for each radio link. Fill out a copy of the Radio Link Planning Worksheet before continuing with Chapter Four.

In addition, this chapter provides an introduction to Network Management System (NMS) software and configuration issues.

This chapter contains the following sections:

- Section 3-1, Planning a Aeras WaveLink Network
- Section 3-2, Site Planning
- Section 3-3, Planning Element and Network Management Ethernet Links
- Section 3-4, Planning DS-3 or E3 Links
- Section 3-5, Power Planning
- Section 3-6, Transmit Power Planning
- Section 3-7, Radio Link Planning

NOTE Make sure that you read through this chapter, and make a copy of and fill out the Radio Link Planning Worksheet in Section 3-7 before you continue with the Aeras WaveLink installation.

3-1 Planning a Aeras WaveLink Network

As described in Section 1-5, the Aeras WaveLink can be used to support a number of applications. However, the two most common configurations are point-to-point and mesh network. Point-to-point configurations (Figure 1-1) are easiest to plan and implement, as the radio links merely transmit industry-standard formatted data from one location to another. Mesh network configurations (Figure 1-7) use Aeras Networks WaveStream Switches to create networks that feature high reliability, low maintenance cost, improved scalability, and enhanced interference mitigation.

Both configurations use common point-to-point radio links, so the point-to-point radio link planning can also be applied to mesh network configurations. Generally, the common points to consider when planning a Aeras WaveLink network are:

- **Line of Sight:** Unlike some frequency bands, the Aeras WaveLink radios must be within line of sight of each other. That is, the far-end antenna must be visible from

the near-end antenna. If there are trees, buildings, mountains, or other obstructions between the two antennas, the Aeras WaveLinks on each end of the radio link will be unable to communicate with each other. Make sure the Aeras WaveLink radios used in each radio link are within line of sight of each other. Refer also to the Fresnel Zone Clearance section that follows.

- **Fresnel Zone Clearance:** There must be sufficient open space around the direct line of sight to minimize interference with the radio beam. At a minimum, 60% of the first Fresnel zone of the path should be clear.

  Even with clear line-of-sight, objects still may be near enough to the transmission path to cause problems. Obviously, objects that stand directly in the transmission path obstruct the beam, causing a drop in signal strength at the receiving end; in addition, objects and reflective surfaces that are in near proximity to the path can cause signal interference and attenuation of the received signal.

  Fresnel zones define the amount of clearance required for obstacles. These zones are series of concentric ellipsoid surfaces that surround the straight-line path between the two antennas. The first Fresnel zone is defined as the surface containing every point for which the distance from the transmitter to any reflection point on the surface and then on to the receiver is one-half wavelength longer than the direct signal path.

  The following equation shows that Fresnel zones are a function of the transmission frequency, path length, and location along the path:

$$F1 = 17.3\sqrt{\frac{d1d2}{fD}} \quad \text{Fresnel Zones formula}$$

  Where:

  Fl = First Fresnel zone radius in meters
  d1= Distance from transmitter to reflection point in kilometers
  d2 = Distance from reflection point to receiver in kilometers
  D = Length of direct signal path in kilometers
  f = Transmission frequency in GHz.

  An envelope at six-tenths of the first Fresnel zone (referred to simply as the Fresnel Zone Clearance) defines the minimum acceptable clearance of an obstacle (see Figure 3-1). The formula for the Fresnel Zone Clearance is shown after Figure 3-1.

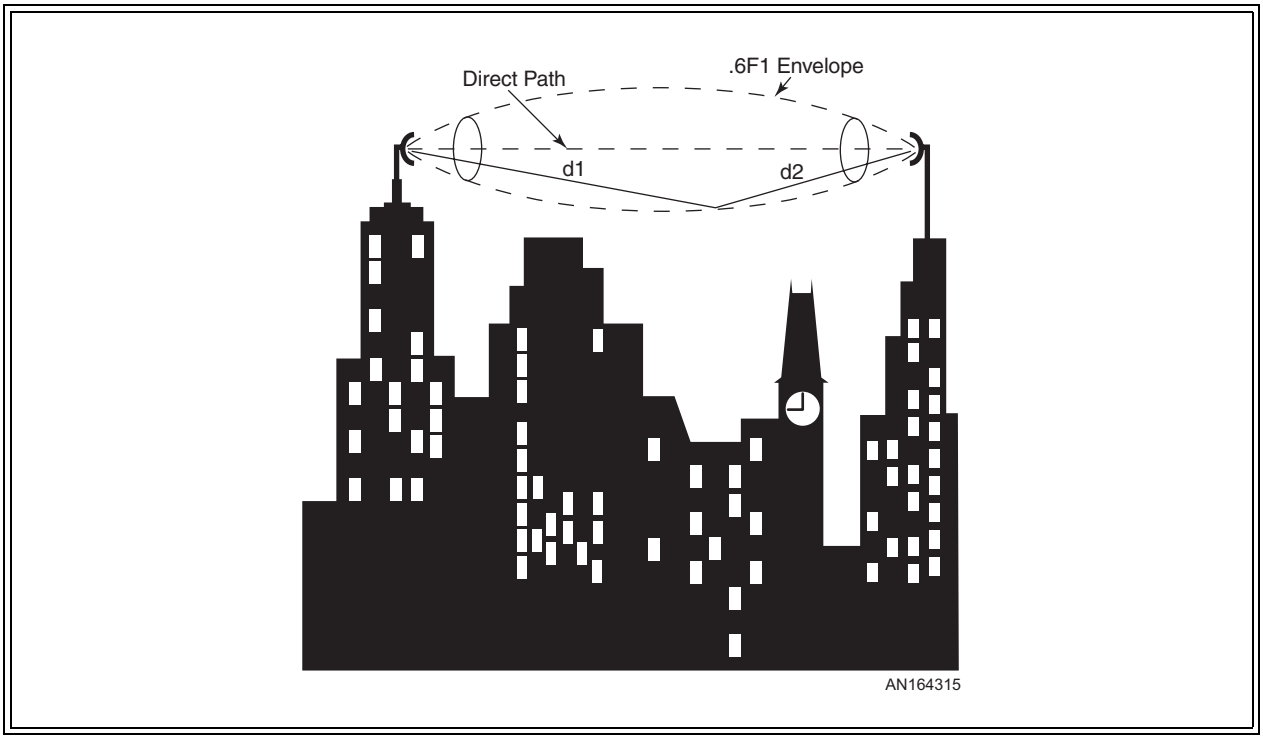

Figure 3-1 Fresnel Zone Clearance

$$0.6F1 = 10.4\sqrt{\frac{d1d2}{fD}} \quad \text{Fresnel Zone Clearance formula}$$

Where:

Fl = First Fresnel zone radius in meters
d1= Distance from transmitter to reflection point in kilometers
D = Length of direct signal path in kilometers
d2 = D - d1
f = Transmission frequency in GHz.

Figure 3-1 shows that the Fresnel zone radius is greatest at midpath. It is at this point that the required obstacle clearance is greatest. The equation given previously yields the 0.6F1 minimum beam clearance envelope values at midpath as shown in Table 3-1. Also use the equation to calculate the necessary minimum beam clearance envelope for other obstacles along the path, especially near both endpoints of the path.

Table 3-1 Beam Clearance Envelope at Midpath

Path Distance	Midpath Minimum Beam Clearance Envelope (Note)
2 km	7 m
5 km	11 m
10 km	15 m
20 km	21
32 km	27 m
1 mile	20 ft
3 miles	34 ft
6 miles	48 ft
12 miles	69 ft
20 miles	88 ft
Note: The minimum beam clearance envelope is defined by the radius around the direct path shown in Figure 3-1, within which there must be no obstacles.	

NOTE The Fresnel zone surrounds the direct signal path, so it affects objects to the side of the path as well as objects directly in the path.

- **Multipath Fading:** See Figure 3-2. Because a Aeras WaveLink terminal typically transmits its strongest signals in a cone-shaped pattern, some of the signal may be reflected from a nearby building, from water under the signal path, or from other RF reflectors. This reflected signal can then be received by the far-end Aeras WaveLink and superimposed on the main signal, usually degrading the signal strength. To avoid multipath fading, Aeras Networks recommends that you install the Aeras WaveLink antenna on the back, rather than the front, of buildings to avoid multipath fading from water or other ground-level surfaces, and that you plan radio links away from nearby buildings.

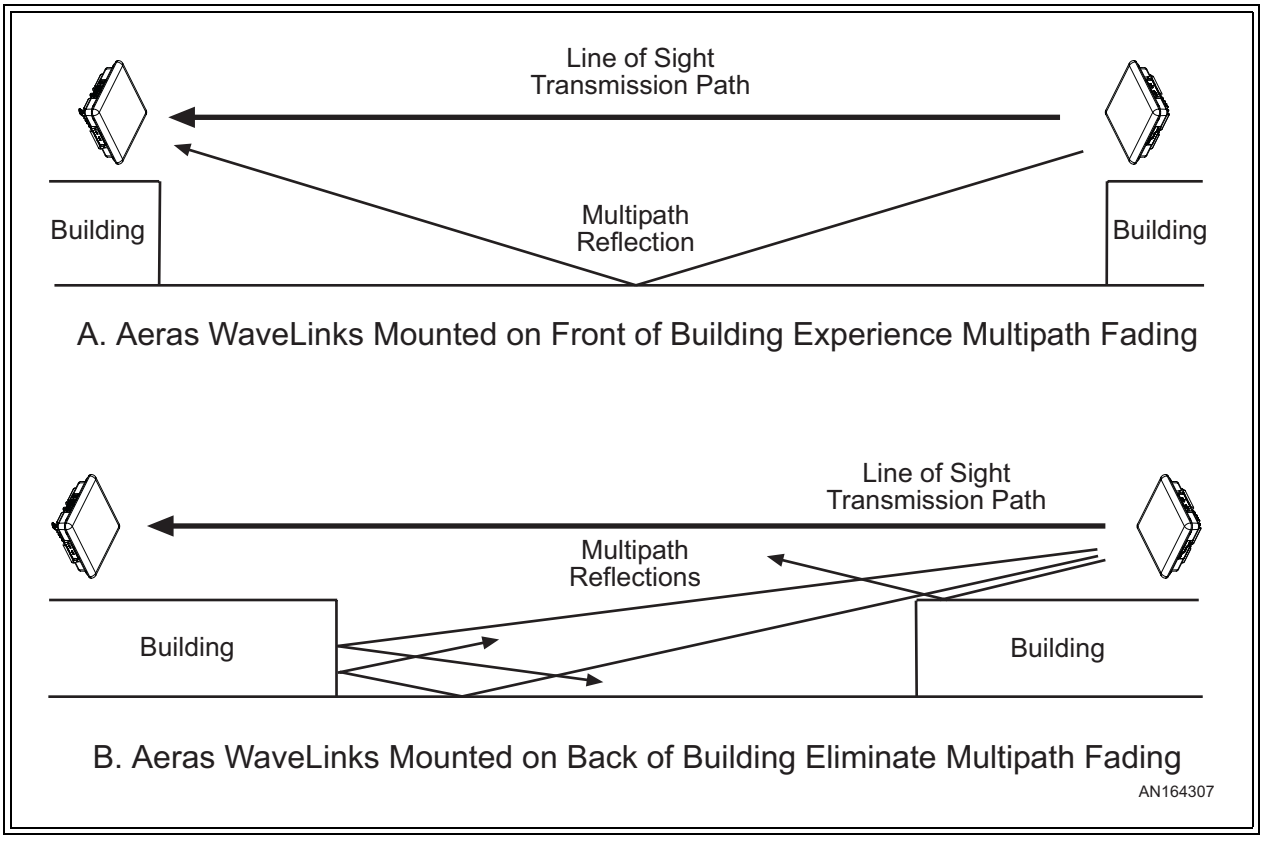

Figure 3-2 Preventing Multipath Fading from Ground-Level Surfaces

- **External Interference:** Because the Aeras WaveLink operates in an unlicensed band, Aeras Networks strongly recommends that you use a spectrum analyzer at both ends of planned radio links, with the receiving antenna as close to the proposed Aeras WaveLink antenna mounting spot as possible. Use a polarized antenna, and scan for both horizontally- and vertically-polarized interfering radiation. If you find external interference in either of the two (High or Low) bands, configure the Aeras WaveLink for the least-impacted band. Refer to Table 3-3 for the High and Low bands for the Aeras WaveLink radio.

3-2 Site Planning

Each proposed Aeras WaveLink terminal site requires a site survey and plan for the following:

- **Power:** The Aeras WaveLink radio requires a +/-21 to +/-60 VDC power source. Make sure required power supply is available before installing the Aeras WaveLink.
- **Mounting Point:** The Aeras WaveLink is usually mounted on a vertical mast or pole mounted on a building or a tower. The Aeras WaveLink mounting bracket can accommodate a 4.5- to 11.5-cm (1.75- to 4.5-in.) diameter mast or pole.

  When the Aeras WaveLink is equipped with an external antenna, the antenna and the Aeras WaveLink radio should be mounted so the factory-supplied 2 m (79 in.) can be used to connect the antenna to the Aeras WaveLink.
- **Grounding and Lightning Protection:** The Aeras WaveLink radio requires adequate grounding and lightning protection. If the mounting point described above provides adequate lightning protection, the Aeras WaveLink radio will still need a good earth ground to a bare-metal earth ground. Refer to Appendix 4 for detailed grounding and lightning protection recommendations.
- **Cable Routing:** The Aeras WaveLink DS-3, E3 and/or Ethernet data cables connect associated external equipment to the Aeras WaveLink radio. Before installation, procure cable ties and/or standoffs to route and to create service loops for these cables.
- **Physical Security:** The Aeras WaveLink radio is typically mounted high enough to prevent casual tampering. The Aeras WaveLink radio is further protected by anti-tampering chassis screws that prevent most casual attempts to open the chassis.

3-3 Planning Element and Network Management Ethernet Links

3-3.1 Links From the EMS or NMS to the Aeras WaveLink

The Aeras WaveLink communicates with SNMP-based Element Management Systems and Network Management Systems over Ethernet communication links. Because the Aeras WaveLink contains two independent switched Ethernet ports, one Aeras WaveLink can be connected directly to an Ethernet switch or router, and colocated Aeras WaveLinks can be cascaded. Figure 3-3 shows some common arrangements for the EMS and/or NMS Ethernet links.

The cable run from the Ethernet switch or router to the Aeras WaveLink must be 100 m (328 ft.) or less, and can be straight-through or crossover, because the Aeras WaveLink Ethernet ports automatically detect the transmit and receive pairs and switch them if necessary. Aeras Networks sells 25 m (82 ft.), 50 m (14 ft.), and 100 m (328 ft.) Ethernet cables with the correct connectors for these links, as described in Section 1-4.6.

Alternatively, when Aeras WaveLinks are to be cascaded as shown in Figure 3-3 (B), Aeras Networks sells a 6 m (20 ft.) Ethernet cable with the correct connectors for the Aeras WaveLink- to-Aeras WaveLink links, as described in Section 1-4.6.

Note that the EMS or NMS must be within eight or fewer Ethernet hops of the Aeras WaveLink for proper communications.

3-3.2 Links Between Aeras WaveLinks

As shown in Figure 3-3, the near end Aeras WaveLink automatically sets up an ethernet connection to the Aeras WaveLink at the far end of each radio system, or link. In ethernet models, the inband ethernet connection uses the payload data ethernet link, while in DS-3 and E3 models, the ethernet connection is out-of-band, and does not interfere with the DS-3 or E3 payload data.

NOTE

Because the Aeras WaveLink-to-Aeras WaveLink ethernet connection cannot be turned off, make sure you do not connect both ends of the Aeras WaveLink-to-Aeras WaveLink to the ethernet. This will help prevent ethernet loops and potential data storms.

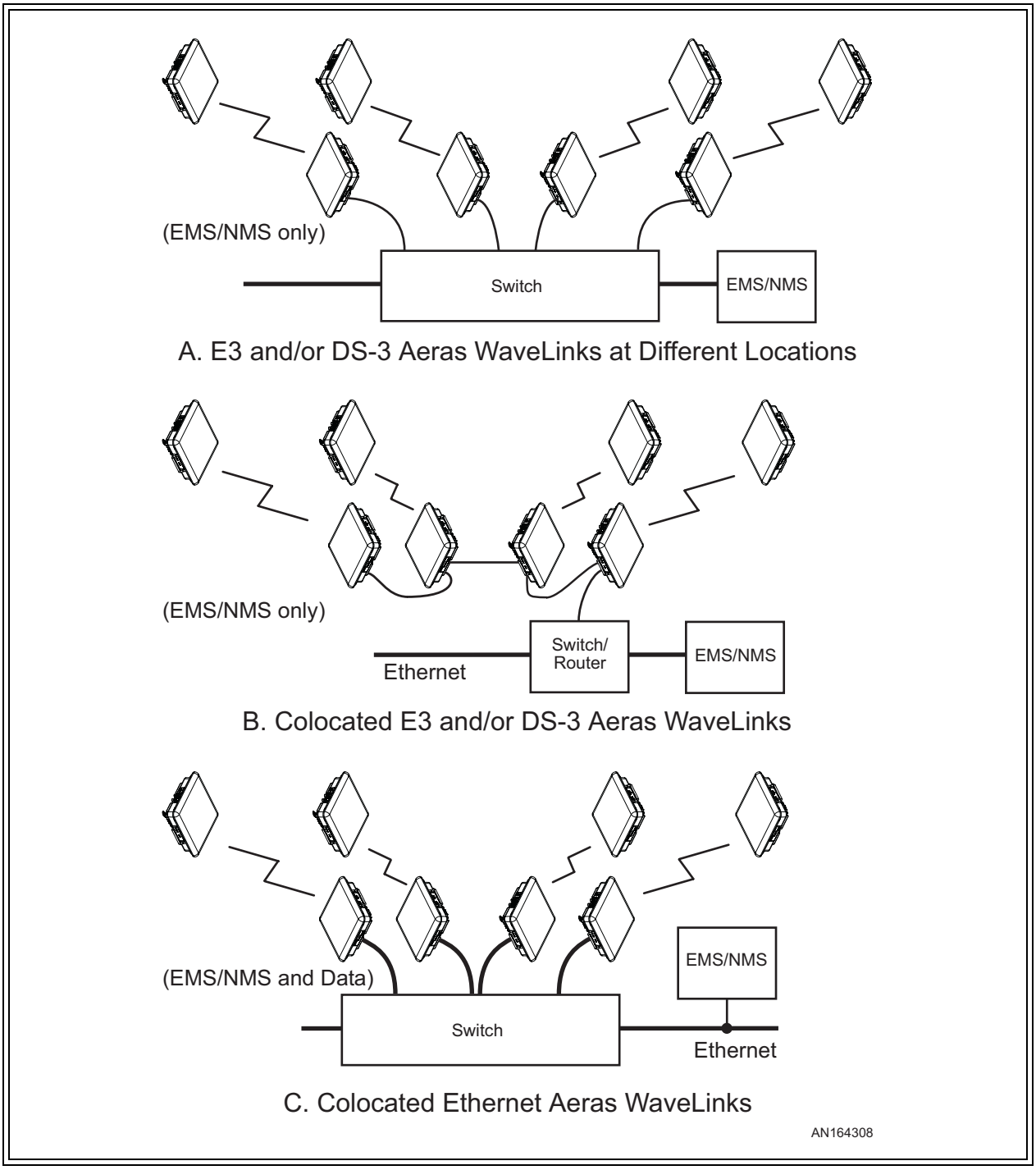

Figure 3-3 Typical EMS/NMS Ethernet Connections

3-4 Planning DS-3 or E3 Links

The Aeras WaveLink DS-3 and E3 versions use paired 75 Ohm cables with male TNC connectors for the transmit and receive data from external DS-3 or E3 equipment. Aeras Networks sells 25 m (82 ft.), 50 m (14 ft.), and 100 m (328 ft.) DS-3 or E3 cables with the correct connectors for these links, as described in Section 1-4.6.

Alternatively, when a Aeras WaveStream Switch is connected to the Aeras WaveLink, Aeras Networks sells a 6 m (20 ft.) DS-3 cable with the correct connectors for this link, as described in Section 1-4.6.

3-5 Power Planning

Aeras Networks sells 25 m (82 ft.), 50 m (14 ft.), and 100 m (328 ft.) power cables with the correct connectors for Aeras WaveLink power, as described in Section 1-4.6.

3-6 Transmit Power Planning

The Aeras WaveLink normally uses a manually-set output power level. When Automatic Transmit Power Control (ATPC) is enabled, the far-end Aeras WaveLink terminal provides feedback to the near-end Aeras WaveLink to set the transmit power to the lowest level required for clear data transmission.

Transmit power can be attenuated by 40 dB for initial configuration and interference isolation. Also, a maximum transmit power level can be set (whether or not ATPC is enabled) to prevent interference with other RF receivers.

3-6.1 Maximum Aeras WaveLink Power Output

Since the Aeras WaveLink can be ordered in a number of configurations, with different gains for each of the associated antennas, use the Table 3-2 to determine the maximum power output. Note that the factory-supplied external antenna cable attenuates the maximum power output by approximately 0.5 dB.

Table 3-2 Maximum Power Output by Model Configuration

Model	Frequency Band	Link Carries	Antenna	Max Tx Power
M100746-101 M100747-101 M100746-201 M100747-201	5.25-5.35 GHz -- Per FCC Regulations	DS-3 or Ethernet (45 Mbps)	Integral	-1 dBm +21 dBi = +20 dBm Average EIRP
M100748-101 M100749-101 M100748-201 M100749-201	5.725-5.825 GHz -- Per FCC Regulations	DS-3 or Ethernet (45 Mbps)	Integral	+16 dBm +21 dBi = 37 dBm EIRP
M100748-102 M100749-102 M100748-202 M100749-202			External, 61 cm (2 ft.)	+16 dBm +28 dBi -0.5 dB = 43.5 dBm EIRP
M100748-102 M100749-102 M100748-202 M100749-202			External, 122 cm (4 ft.)	+16 dBm +34.6 dBi -0.5 dB = 50.1 dBm EIRP
M100746-101 M100747-101 M100746-201 M100747-201	5.25-5.35 GHz -- non-FCC	DS-3 or Ethernet (45 Mbps)	Integral	+10 dBm +21 dBi = 31 dBm EIRP
M100746-102 M100747-102 M100746-202 M100747-202			External, 61 cm (2 ft.)	+10 dBm +28 dBi -0.5 dB = 37.5 dBm EIRP
M100746-102 M100747-102 M100746-202 M100747-202			External, 122 cm (4 ft.)	+10 dBm +34.6 dBi -0.5 dB = 44.1 dBm EIRP
M100746-102 M100747-102 M100746-202 M100747-202			External, customer-supplied	+10 dBm +___ dBi -0.5 dB = _____ dBm EIRP (Note)

Table 3-2 Maximum Power Output by Model Configuration (continued)

Model	Frequency Band	Link Carries	Antenna	Max Tx Power
M100748-101 M100749-101 M100748-201 M100749-201	5.725-5.825 GHz -- non-FCC	DS-3 or Ethernet (45 Mbps)	Integral	+16 dBm +21 dBi = 37 dBm EIRP
M100748-102 M100749-102 M100748-202 M100749-202			External, 61 cm (2 ft.)	+16 dBm +28 dBi -0.5 dB = 43.5 dBm EIRP
M100748-102 M100749-102 M100748-202 M100749-202			External, 122 cm (4 ft.)	+16 dBm +34.6 dBi -0.5 dB = 50.1 dBm EIRP
M100748-102 M100749-102 M100748-202 M100749-202			External, customer-supplied	+16 dBm +___ dBi -0.5 dB = _____ dBm EIRP (Note)
(TBD) (TBD) (TBD) (TBD)	5.725-5.825 GHz -- Per ETSI Regulations	E3 or Ethernet (35 Mbps)	Integral	-2 dBm +21 dBi = +24 dBm Average EIRP, +28 dBm Peak EIRP
M100746-301 M100747-301M 100746-201 M100747-201	5.25-5.35 GHz -- non ETSI	E3 or Ethernet (35 Mbps)	Integral	+10 dBm +21 dBi = 31 dBm EIRP
M100746-302 M100747-302 M100746-202 M100747-202			External, 61 cm (2 ft.)	+10 dBm +28 dBi -0.5 dB = 37.5 dBm EIRP
M100746-302 M100747-302 M100746-202 M100747-202			External, 122 cm (4 ft.)	+10 dBm +34.6 dBi -0.5 dB = 44.1 dBm EIRP
M100746-302 M100747-302 M100746-202 M100747-202			External, customer-supplied	+10 dBm +___ dBi -0.5 dB = _____ dBm EIRP (Note)

Table 3-2 Maximum Power Output by Model Configuration (continued)

Model	Frequency Band	Link Carries	Antenna	Max Tx Power
M100748-301 M100749-301 M100746-401 M100747-401	5.725-5.825 GHz -- non ETSI	E3 or Ethernet (35 Mbps)	Integral	+16 dBm +21 dBi = 37 dBm EIRP
M100748-302 M100749-302 M100746-402 M100747-402			External, 61 cm (2 ft.)	+16 dBm +28 dBi -0.5 dB = 43.5 dBm EIRP
M100748-302 M100749-302 M100746-402 M100747-402			External, 122 cm (4 ft.)	+16 dBm +34.6 dBi -0.5 dB = 50.1 dBm EIRP
M100748-302 M100749-302 M100746-402 M100747-402			External, customer-supplied	+16 dBm +___ dBi -0.5 dB = _____ dBm EIRP (Note)
Note: External, customer-supplied antenna gain to be provided by manufacturer.				

3-6.2 Calculating the Required Transmit Power

The Aeras WaveLink will normally use the maximum transmit power listed in Table 3-2, but may need to be attenuated when there are other receivers beyond the remote Aeras WaveLink terminal (for instance, in a mesh network). In this case, the professional installer must use the free-space calculation to determine the actual Maximum Transmit Power to prevent interference.

3-7 Radio Link Planning

As described in Section 1-4, each radio link requires one Aeras WaveLink at each end of the link. Before you start installing your Aeras WaveLinks, fill in the following information for both ends of the radio link:

Table 3-3 Radio Link Planning Worksheet

	Aeras WaveLink 1 - High Band	**Aeras WaveLink 2 - Low Band**
Information Common to Both Aeras WaveLink Radios		
Radio Link Name:		
Radio Link Information:		
Radio Link Polarization (pick one, must be the same for both): HORIZONTAL VERTICAL		
Radio Link Payload (as ordered, must be the same for both): DS-3 E3 Ethernet		
Information Unique to Each Aeras WaveLink Radio		
Model Number (see Aeras WaveLink Label & Table 1-1)	M1007 _ _ - _ 0 _ (high band)	M1007 _ _ - _ 0 _ (low band)
Antenna Type (pick one)	Integral 61 cm (2 ft.) 122 cm (4 ft.) other: _____	Integral 61 cm (2 ft.) 122 cm (4 ft.) other: _____
Radio Link Channel and Band Center Frequency (pick one pair, each end of the radio link must be different)	Channel 1 High Band, 5.3 GHz: Tx--5.322 GHz/ Rx--5.262 GHz (default)	Channel 1 Low Band, 5.3 GHz: Tx--5.262 GHz/ Rx--5.322 GHz
	Channel 2 High Band, 5.3 GHz: Tx--5.338 GHz/ Rx--5.278 GHz	Channel 2 Low Band, 5.3 GHz: Tx--5.278 GHz/ Rx--5.338 GHz
	Channel 1 High Band, 5.8 GHz: Tx--5.797 GHz/ Rx--5.737 GHz (default)	Channel 1 Low Band, 5.8 GHz: Tx--5.737 GHz/ Rx--5.797 GHz
	Channel 2 High Band, 5.8 GHz: Tx--5.813 GHz/ Rx--5.753 GHz	Channel 2 Low Band, 5.8 GHz: Tx--5.753 GHz/ Rx--5.813 GHz
Transmit Attenuation (default = Disable)	Enable Disable	Enabled Disable
Maximum Transmit Power (refer to Section 3-6)	__ dBm	__ dBm

Table 3-3 Radio Link Planning Worksheet (continued)

	Aeras WaveLink 1 - High Band	**Aeras WaveLink 2 - Low Band**
Automatic Tx Power Control (refer to Section 3-6)	Enable Disable	Enabled Disable
IP Address (must be different, obtain from IP network planner)	_ _ _ . _ _ _ . _ _ _ . _ _ _	_ _ _ . _ _ _ . _ _ _ . _ _ _
Subnet Mask (obtain from IP network planner)	_ _ _ . _ _ _ . _ _ _ . _ _ _	_ _ _ . _ _ _ . _ _ _ . _ _ _
Default Gateway (obtain from IP network planner)	_ _ _ . _ _ _ . _ _ _ . _ _ _	_ _ _ . _ _ _ . _ _ _ . _ _ _
RSSI Alarm Level (default = -70 dBm)	- __ dBm	- __ dBm
Alarm on Loss of DS-3, E3 or Ethernet Input Signal	Enabled Disable	Enabled Disable
Login Name (up to 19 printable ASCII characters) Note that the login name is case-sensitive.		
Login Password (8 - 19 printable ASCII characters) Note that the password is case-sensitive.		
Allow Login From IP Addresses (don't forget Craft PC)	Any (default) -OR- _ _ _ . _ _ _ . _ _ _ . _ _ _ _ _ _ . _ _ _ . _ _ _ . _ _ _	Any (default) -OR- _ _ _ . _ _ _ . _ _ _ . _ _ _ _ _ _ . _ _ _ . _ _ _ . _ _ _
SNMP Trap Community (default = public, up to 19 ASCII characters starting with an alpha character, including numbers and - _ .)		
Send SNMP Traps to	_ _ _ . _ _ _ . _ _ _ . _ _ _ _ _ _ . _ _ _ . _ _ _ . _ _ _ _ _ _ . _ _ _ . _ _ _ . _ _ _	_ _ _ . _ _ _ . _ _ _ . _ _ _ _ _ _ . _ _ _ . _ _ _ . _ _ _ _ _ _ . _ _ _ . _ _ _ . _ _ _
Read/Write Community (default = public, up to 19 ASCII characters starting with an alpha character, including numbers and - _ .)		
Allow Read/Write Access From	Any (default) -OR- _ _ _ . _ _ _ . _ _ _ . _ _ _ _ _ _ . _ _ _ . _ _ _ . _ _ _ _ _ _ . _ _ _ . _ _ _ . _ _ _	Any (default) -OR- _ _ _ . _ _ _ . _ _ _ . _ _ _ _ _ _ . _ _ _ . _ _ _ . _ _ _ _ _ _ . _ _ _ . _ _ _ . _ _ _

Table 3-3 Radio Link Planning Worksheet (continued)

	Aeras WaveLink 1 - High Band	**Aeras WaveLink 2 - Low Band**
Read-Only Community (default = public, up to 19 ASCII characters starting with an alpha character, including numbers and - _ .)		
Allow Read-Only Access From	Any (default) -OR- _ _ _ . _ _ _ . _ _ _ . _ _ _	Any (default) -OR- _ _ _ . _ _ _ . _ _ _ . _ _ _
System Name (optional, up to 255 ASCII characters)		
System Contact Information (optional, up to 255 ASCII characters)		
System Location (optional, up to 255 ASCII characters)		

(this page intentionally left blank)

Four

Installing the Aeras WaveLink

This chapter describes the physical installation of the Aeras WaveLink. Each Aeras WaveLink consists of an outdoor pole-mounted radio with integral antenna or optional external antenna. If so equipped, the Aeras WaveLink radio is connected to the external antenna with a factory-supplied coaxial cable.

> **NOTE** For faster installation, make sure you have a filled-out copy of the Radio Link Planning Worksheet from Chapter Three before continuing with the rest of this chapter.

This chapter covers the following topics:

- Section 4-1, Before Installing, includes general guidelines, equipment unpacking, inventory and tools
- Section 4-2, Initial Configuration, includes all the steps necessary to configure the Aeras WaveLink radio before mounting it (and its optional external antenna) on the pole
- Section 4-3, Mounting the Aeras WaveLink, includes steps for installing the Aeras WaveLink (and its optional external antenna) on the pole
- Section 4-4, External Antenna Installation (Optional), includes optional external antenna installation steps
- Section 4-5, Completing the Aeras WaveLink Installation, describes installed Aeras WaveLink cabling and grounding
- Section 4-6, Aligning the Antenna, includes Aeras WaveLink antenna alignment steps
- Section 4-7, Acceptance Testing, includes Aeras WaveLink acceptance tests

This chapter describes initial configuration and installation of the Aeras WaveLink hardware. After completing this chapter, the installer should proceed to Chapter Five to perform a final configuration on the Aeras WaveLink radio after hardware installation.

> **NOTE** This device must be professionally installed.

NOTE This device is to be exclusively used for fixed point-to-point operation with directional antennas.

4-1 Before Installing

Before you continue with this installation, make sure you have a filled-out copy of the Radio Link Planning Worksheet found in Section 3-7.

4-1.1 General Guidelines

The installation, maintenance, or removal of antenna systems requires qualified, experienced personnel. Aeras WaveLink installation instructions have been written for such personnel.

NOTE Before installing the Aeras WaveLink radio, it is recommended that installation personnel read this chapter in its entirety. If installation personnel are unfamiliar with the radio components, we recommend reading Chapter One. After reading through the full installation procedure, installation personnel may proceed to the relevant sections in this chapter.

Since Aeras WaveLink is easy to install, a previously installed Aeras WaveLink can be conveniently moved to a new location. Re-deployment allows the user to meet the requirements of a changing system with minimal effort and expense. Thus, installation personnel should assume that the activities described in this chapter are not one-time procedures but will have to be repeated from time to time.

This manual assumes that the site power and grounding have already been installed. This manual also assumes that the antenna mounting pole is in place before installing the Aeras WaveLink. When installing and aligning a Aeras WaveLink radio or associated radio link, the user should always have on hand the required tools, test equipment and any other required miscellaneous installation devices and materials.

NOTE The Aeras WaveLink electronics have been designed to be maintenance free, and the outdoor components are very rugged. However, because of continued exposure to weather, it is recommended that qualified personnel inspect antenna systems once a year to verify proper installation, maintenance, and condition of equipment.

Aeras Networks disclaims any liability or responsibility for the results of improper or unsafe installation practices.

4-1.2 Equipment and Unpacking

> **NOTE** Aeras Networks suggests that the user retain at least one (1) of each packing carton with all its packing materials. In the event that it is necessary to return a unit, the user will have the required packing material for safe shipment.

Each Aeras WaveLink radio is shipped with the Aeras WaveLink User's Manual on CD-ROM, and a separate box contains the optional external Antenna Mount Assembly, U-bolts and antenna with tube attachment. Unpack each box and examine the exterior of each unit for any visible damage. If visible damage is detected, immediately contact your sales representative or Aeras Networks Customer Support.

The equipment shipped (Aeras WaveLink radio with or without external antenna) depends on the specific purchase order as described in Table 1-1.

4-1.3 Packing Lists and Orderable Parts

Each packing carton is accompanied by a packing list. Verify the contents of the carton against the packing list. Regardless of the packing list parts described here, the shipped packing list is binding.

Note the warranty sticker on the Aeras WaveLink. The Aeras WaveLink radio is sealed at the factory. Tampering with these seals voids the warranty.

See Table 4-1 for a high-level description of the orderable parts, and see Figure 4-1 for a picture of the orderable Aeras WaveLink parts.

Table 4-1 Aeras WaveLink Radio Orderable Parts

Item	Qty	Part Number	Description	See Also
1A	1	See Table 1-1	Aeras WaveLink Radio, Integral Antenna	Section 1-4.3
1B	1	See Table 1-1	Aeras WaveLink Radio, External Antenna	Section 1-4.3
2A	1	100607-001	Non-Adjustable Elevation Single Aeras WaveLink Radio Bracket	Section 1-4.4
2B	1	100680-001	Adjustable Elevation Single Aeras WaveLink Radio Brackets	Section 1-4.4
2C	1	100694-001	Adjustable Elevation Dual Aeras WaveLink Radio Brackets	Section 1-4.4
3	1	AC100008	Optional 2 m (6.5 ft.) N-to-N External Antenna RF Cable (required for External Antenna Aeras WaveLink models)	Section 1-4.6

Table 4-1 Aeras WaveLink Radio Orderable Parts (continued)

Item	Qty	Part Number	Description		See Also
4	1	091-455524 091-455548	61 cm (2 ft.) 122 cm (4 ft.)	Optional Single Polarization External Parabolic Antenna with Mounting Bracket	Section 1-4.6
5A	1	100763-001 100764-001 100765-001	25 m (82 ft.) 50 m (164 ft.) 100 m (328 ft.)	One Dual DS-3/E3 Payload Data Cable, One 10/100 Ethernet Control Cable, and One Power Cable	Section 1-4.6
5B	1	100766-001 100767-001 100768-001	25 m (82 ft.) 50 m (164 ft.) 100 m (328 ft.)	One each 10/100 Ethernet Payload and Control Cables, and One Power Cable	Section 1-4.6
6	1	100655-001	6 m (19.7 ft.) Aeras WaveLink-to-Aeras WaveLink 10/100 Ethernet Crossover Cable		Section 1-4.6
7	1	100588-003	6 m (19.7 ft.) Dual 75 Ohm DS-3/E3 TNC-to-TNC Aeras WaveStream Switch Ethernet Cable		Section 1-4.6
8	1	100586-001	Optional 6 m (19.7 ft.) Craft PC 4-pin Circular-to-DB9 RS-232 CLI Cable		Section 1-4.6
9A	1	1101-622	Optional Transtector Lightning Arrestor Kit used at the cable entry to the Power, DS-3/E3 and Ethernet Equipment Structure		Appendix 4
9B	1	1101-622-B	Optional Transtector Lightning Arrestor Kit used at the cable entry to the 10/100 Ethernet and Power Equipment Structure		Appendix 4
10	1	100xxx-001	User Manual CD-ROM		Preface

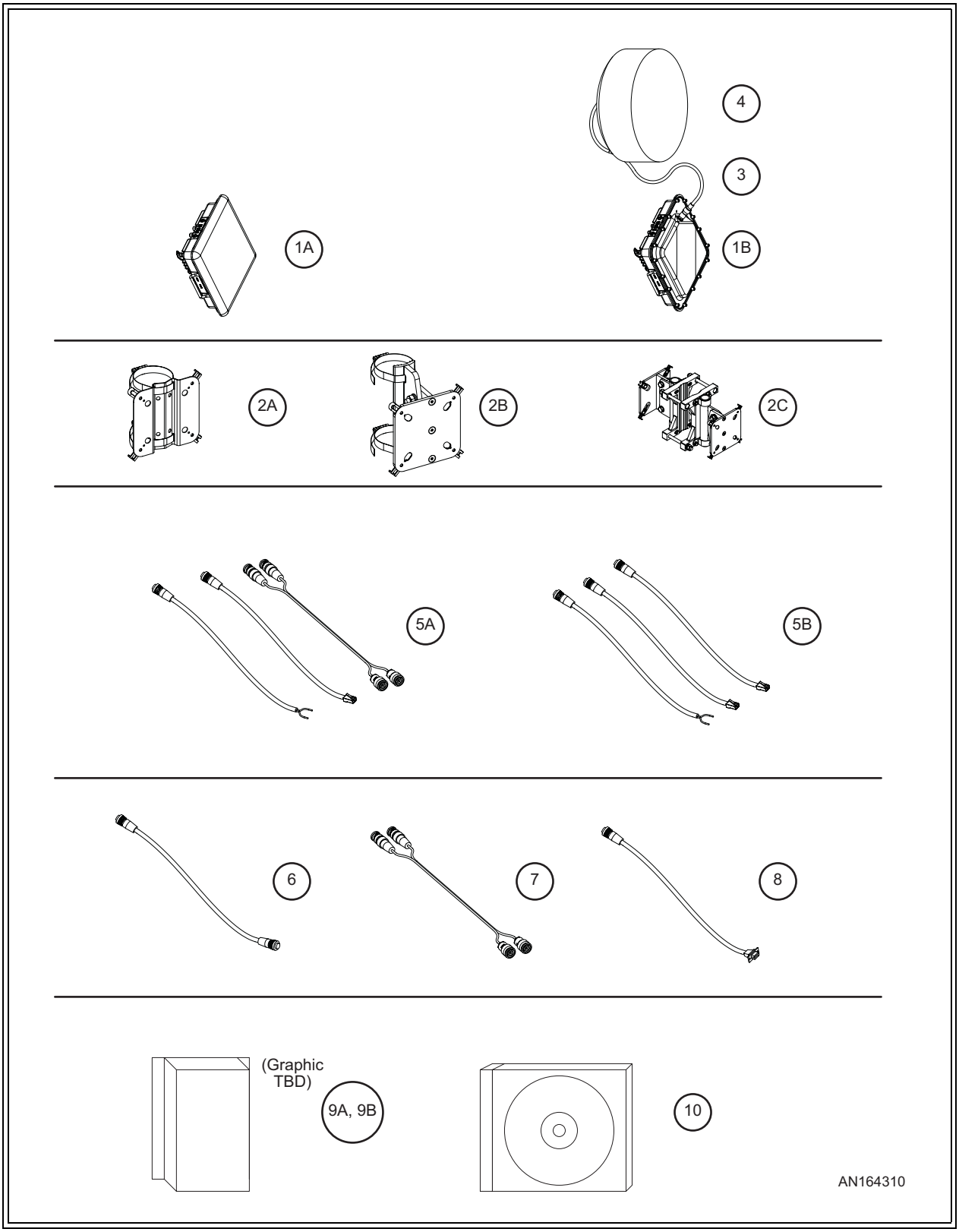

Figure 4-1 Aeras WaveLink Orderable Parts

4-1.4 Installation Tools and Materials

Tools

The user should have at least the following tools on hand before installing the Aeras WaveLink radio:

Table 4-2 Required Installation Tools

Tools	Purpose
13 mm (11/16 in.) and YY mm (XX in.) and RR mm (SS in.) torque wrench	Tighten the pole mount assembly to the pole and tighten the alignment lockdown bolts
Optical aid or compass (optional)	For coarse antenna azimuth alignment
Vertical level (optional)	For coarse antenna elevation alignment
Hand-held voltmeter, including cable with BNC adapter	Fine-tune the antenna alignment
Large Flat-Blade Screwdriver	Tighten the steel band clamps, when required

Materials

Refer to Section 4-1.3 and collect the following materials:

- For DS-3 or E3 models:
  - DS-3 or E3 coaxial cables to the Aeras WaveLink.
  - Ethernet data interface cable to the Aeras WaveLink.
- For Ethernet models:
  - Ethernet data interface cables to the Aeras WaveLink.
- For all models:
  - Power cable to the Aeras WaveLink.
  - Dual DS-3 coaxial cables to the Aeras WaveStream Switch or other equipment.
  - Optional RS-232 cable to Craft PC command line interface. (Future option.)
  - Standoffs and/or tie wraps (or similar) for fastening cables.
  - Vinyl (or equivalent) electrical tape.
  - Butyl rubber amalgamating connector sealing tape.
  - Customer-supplied solid wire or tape (not braided) grounding wire.
  - Lightning arrestors.
  - Optional 2 W, 50 Ohm load with N-Type connector used during initial configuration of Aeras WaveLinks with external antennas.

4-2 Initial Configuration

Aeras Networks strongly recommends that the installer configure the Aeras WaveLink at a depot or on-site before it is mounted in its final location. This section includes instructions on how to configure the Aeras WaveLink before it is installed.

> **STOP** Because you can expose yourself to harmful RF radiation any time the Aeras WaveLink is powered up, do not stand within 2 m (79 in.) of the antenna for prolonged periods during Aeras WaveLink operation. The installer is responsible for ensuring that the antenna is mounted in a place inaccessible to the public.

4-2.1 Connecting a Craft PC to the Aeras WaveLink

> **NOTE** For faster configuration, make sure you have a filled-out copy of the Radio Link Planning Worksheet from Chapter Three before continuing with the rest of this section.

The equipment used to configure the Aeras WaveLink is a Craft PC with 10/100 Ethernet port and cable, equipped with any current web browser and Adobe Acrobat Reader software. Figure 4-2 shows how to connect the Craft PC and power to the Aeras WaveLink for initial configuration.

Perform the following steps:

1. (Only for Aeras WaveLinks with external antennas.) When you are configuring a Aeras WaveLink with an external antenna, connect the external antenna or a 2 W, 50 Ohm load to the antenna port. This prevents harm to the Aeras WaveLink internal circuits should full RF power be applied without a load.
2. If necessary, use the instructions provided with your Craft PC operating system to change the Craft PC ethernet address to 10.0.0.1.
3. Turn off power to the Craft PC to prevent damage to the Ethernet port receive circuitry.
4. Using a factory-supplied ethernet cable, connect an Ethernet-port equipped Craft PC to the Aeras WaveLink as shown in Figure 4-2.
5. MAKE SURE the antenna is pointing away from your work area before you apply power to the Aeras WaveLink.
6. Using a factory-supplied power cable, connect an external power supply to the Aeras WaveLink as shown in Figure 4-2.
7. Turn on power to the Craft PC and verify that the Ethernet port is active. Note that the Aeras WaveLink Ethernet switch will auto-detect transmit and receive pairs, and you should detect an Ethernet connection within a few seconds of port activation.

The Aeras WaveLink is now powered on and transmitting RF, and the Craft PC is now ready to log onto the Aeras WaveLink internal web main page.

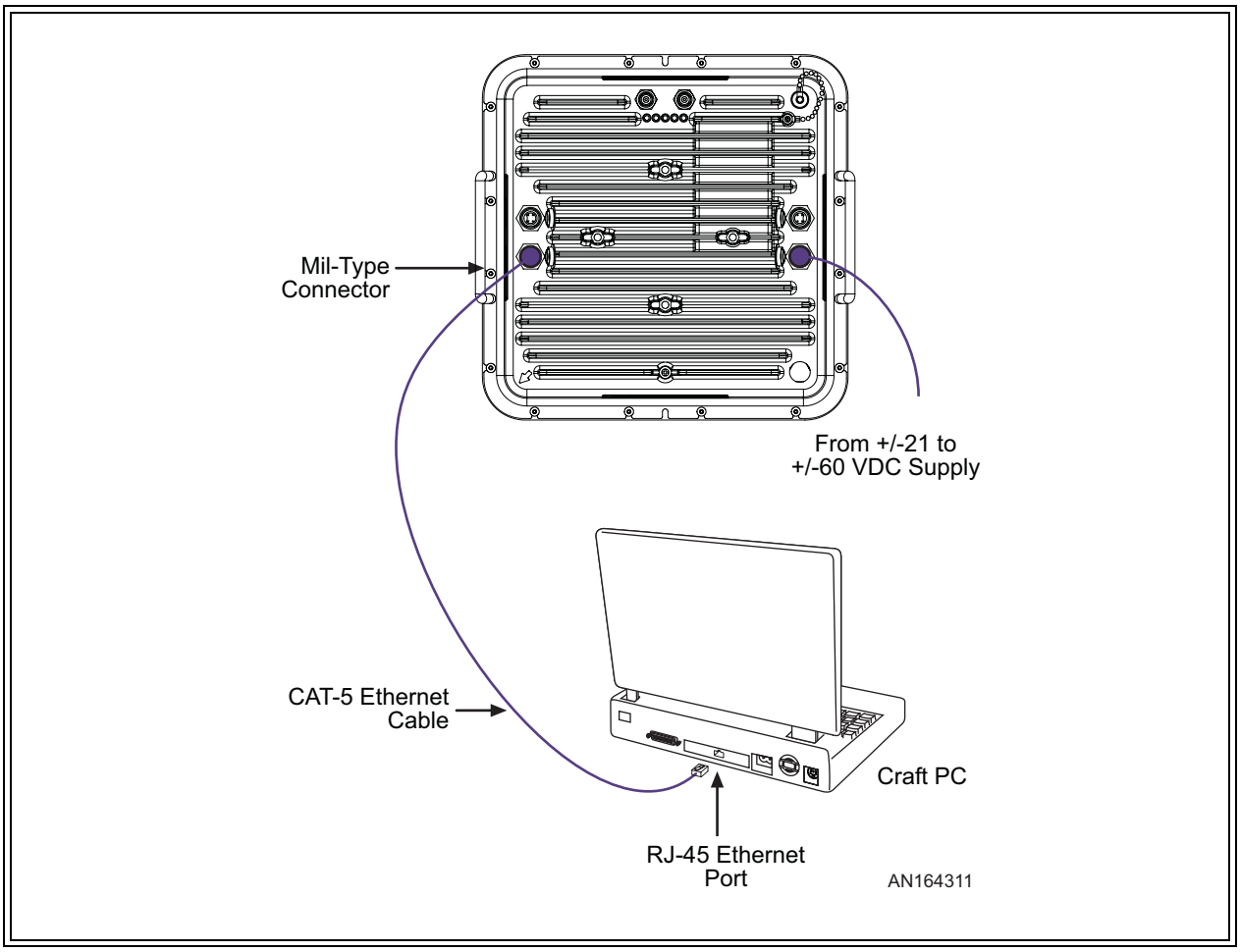

Figure 4-2 Aeras WaveLink Configuration Setup

4-2.2 Logging In to the Aeras WaveLink Built-In Web Server

After you have connected and powered up the Aeras WaveLink and the Craft PC as described in Section 4-2.1, use the web browser on the Craft PC to log into the Aeras WaveLink built-in web server as follows:

8 Launch the web browser per the manufacturer's instructions.

9 Open the web page at ethernet address http://10.0.0.2/ (transmit low models) or http://10.0.0.3/ (transmit high models) in the web browser.

If the web browser ethernet address has been changed, use the replacement ethernet address instead of http://10.0.0.x/.

10 If the Aeras WaveLink has not configured for a login and password, continue with Step 11. If the Aeras WaveLink has already been configured for a login and password, enter both and continue with Step 11.

11 The web browser displays the Monitor Page, similar to the samples shown in Figure 4-3 or Figure 4-4. Note that the values shown for each of the parameters will vary, depending on the state of the Aeras WaveLink.

NOTE Figure 4-3 shows a typical DS-3 Aeras WaveLink Monitor page, while Figure 4-4 shows a typical Ethernet Aeras WaveLink Monitor page.

AERAS NETWORKS

WaveLink DS3 WL-4500

WaveLink 1

Monitor

Monitor
Test
Update Software
Commission Radio
Commission Manager

RSSI		-81 dBm	
BER			
Tx Power		-9 dBm	
		Radio Link Status	
RSSI		**Alarm**	
Receiver Overload		Normal	
BER		**Alarm**	
Demodulator Lock		**Alarm**	
		Hardware Status	
Tx Power		Normal	
Tx Synthesizer Lock		Normal	
Rx Synthesizer Lock		Normal	
		DS-3 Input Status	
DS-3 Input		**Alarm**	
Test Mode		Normal	
Radio Channel		1: Tx 5.737 GHz, Rx 5.797 GHz	
Tx Attenuation		Disable	
Maximum Tx Power		-9 dBm	
Automatic Tx Power Control		Enable	
Remote Radio IP Address		192.168.15.134	
RSSI Alarm Level		-80 dBm	
Alarm on Loss of DS-3 Input		Enable	
IP Address		10.0.1.1	
Subnet Mask		255.255.192.0	
Default Gateway		10.0.0.1	
	Model	**Revision**	**Serial Number**
Unit	100748-102	1	0003
PCB	100471-500	2b	006445
Software		CXDS300_00.0E09	

© 2002 AERAS Networks, Inc.

AN164331

Figure 4-3 Typical DS-3 5.8 GHz Aeras WaveLink Monitor Web Page

AERAS NETWORKS

WaveLink WL-4500

WaveLink 1

Monitor

Monitor
Test
Update Software
Commission Radio
Commission Manager

RSSI		-82 dBm	
BER			
Tx Power		-9 dBm	
		Radio Link Status	
RSSI		**Alarm**	
Receiver Overload		Normal	
BER		**Alarm**	
Demodulator Lock		**Alarm**	
		Hardware Status	
Tx Power		Normal	
Tx Synthesizer Lock		Normal	
Rx Synthesizer Lock		Normal	
		Ethernet Input Status	
Ethernet Input		Normal	
Test Mode		Normal	
Radio Channel		1: Tx 5.737 GHz, Rx 5.797 GHz	
Tx Attenuation		Disable	
Maximum Tx Power		-9 dBm	
Automatic Tx Power Control		Enable	
Remote Radio IP Address		192.168.15.134	
RSSI Alarm Level		-80 dBm	
Alarm on Loss of Ethernet Input		Enable	
IP Address		10.0.1.1	
Subnet Mask		255.255.192.0	
Default Gateway		10.0.0.1	
	Model	**Revision**	**Serial Number**
Unit	100748-102	1	0003
PCB	100471-500	2b	006445
Software		CX4500_00.0E09	

© 2002 AERAS Networks, Inc.

AN164316

Figure 4-4 Typical Ethernet 5.8 GHz Aeras WaveLink Monitor Web Page

12 On the Monitor page, select the link for the Commission Radio page. The web browser displays the Commission Radio page, similar to the samples shown in Figure 4-5 and Figure 4-6.

NOTE Figure 4-5 shows a typical DS-3 Aeras WaveLink Commission Radio page, while Figure 4-6 shows a typical Ethernet Aeras WaveLink Commission Radio page.

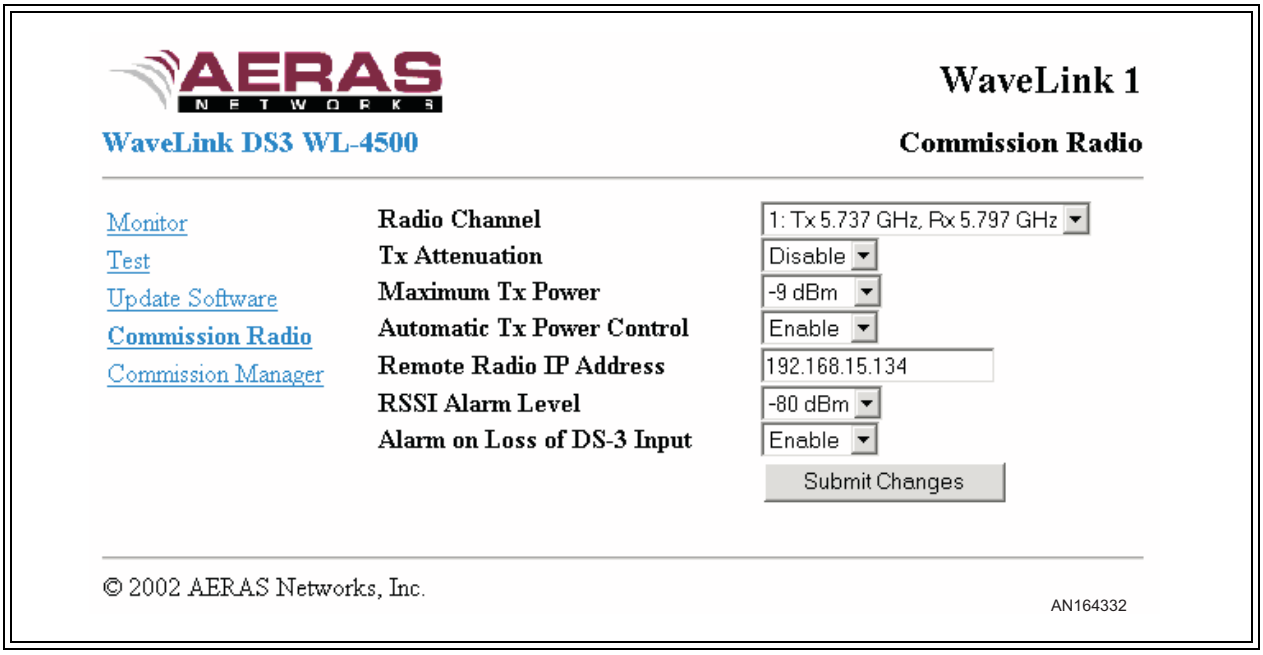

Figure 4-5 Typical 5.8 GHz DS-3 Aeras WaveLink Commission Radio Web Page

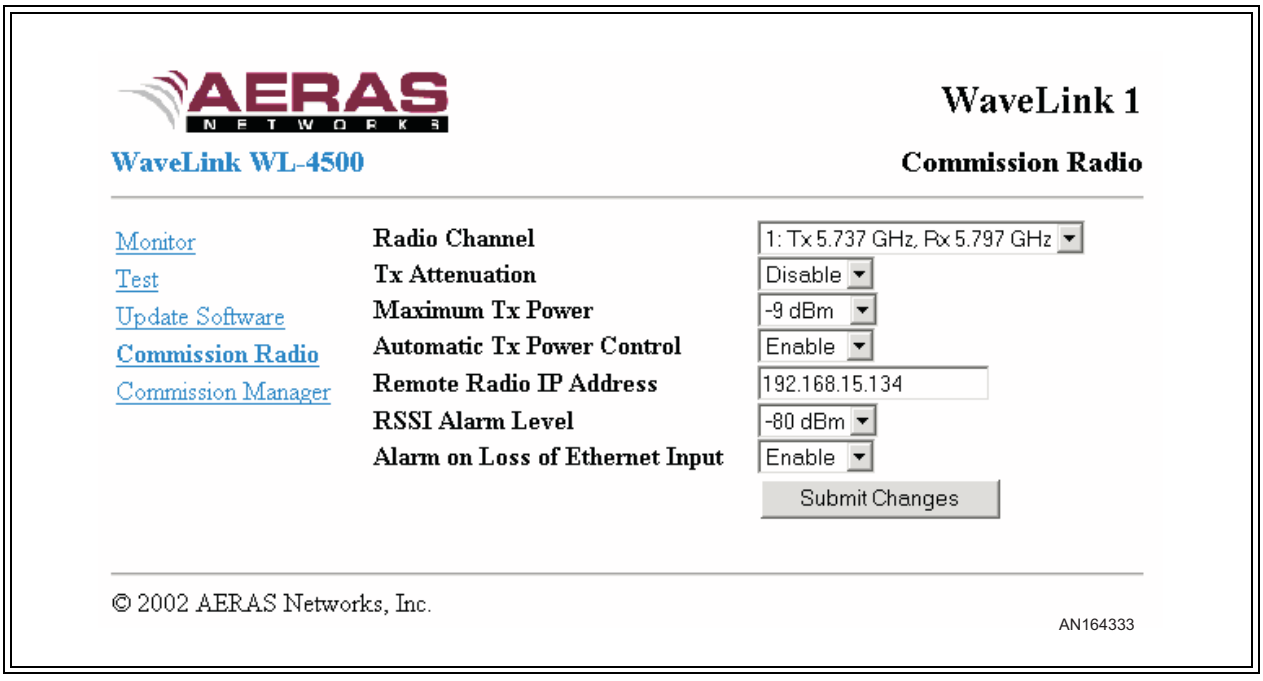

Figure 4-6 Typical 5.8 GHz Ethernet Aeras WaveLink Commission Radio Web Page

NOTE The Aeras WaveLink is shipped with Tx Attenuation disabled. Make sure this setting remains unchanged until the rest of the Aeras WaveLink configuration steps are completed.

13 Using the data entered on the filled-out copy of the Radio Link Planning Worksheet from Chapter Three, select the planned configuration choices available on this page, except the final Tx Attenuation and the Automatic Tx Power Control values. Enable the Tx Attenuation and disable the Automatic Tx Power Control for now.

14 Click Submit Changes to upload changes to the Aeras WaveLink.

15 On the Commission Radio page, select the link for the Commission Interfaces page. The web browser displays the Commission Manager Interfaces page, similar to the samples shown in Figure 4-7 and Figure 4-8.

NOTE Figure 4-7 shows a typical DS-3 Aeras WaveLink Commission Manager page, while Figure 4-8 shows a typical Ethernet Aeras WaveLink Commission Manager page.

16 Using the data entered on the filled-out copy of the Radio Link Planning Worksheet from Chapter Three, select the planned configuration choices available on this page.

17 Click Submit Changes to upload changes to the Aeras WaveLink.

When you are commissioning a DS-3 or E3 Aeras WaveLink, continue with Step 18. When you are commissioning an Ethernet Aeras WaveLink, continue with Step 22.

AERAS NETWORKS

WaveLink DS3 WL-4500

WaveLink 1

Commission Manager

Monitor
Test
Update Software
Commission Radio
Commission Manager

IP Address	10.0.1.1
Subnet Mask	255.255.192.0
Default Gateway	10.0.0.1
Login Name	root
Login Password	**********
Repeat Password	**********
Allow login	◉ from any IP address ○ from IP addresses in this list
Trap Community	
send Traps to	
Read-Write Community	
allow Read-Write access	◉ from any IP address ○ from IP addresses in this list
Read-Only Community	public
allow Read-Only access	◉ from any IP address ○ from IP addresses in this list
System Name	WaveLink 1
(System Administrator)	
System Contact	
(System Location)	
System Location	

Submit Changes

© 2002 AERAS Networks, Inc.

AN164334

Figure 4-7 Typical DS-3 Aeras WaveLink Commission Manager Web Page

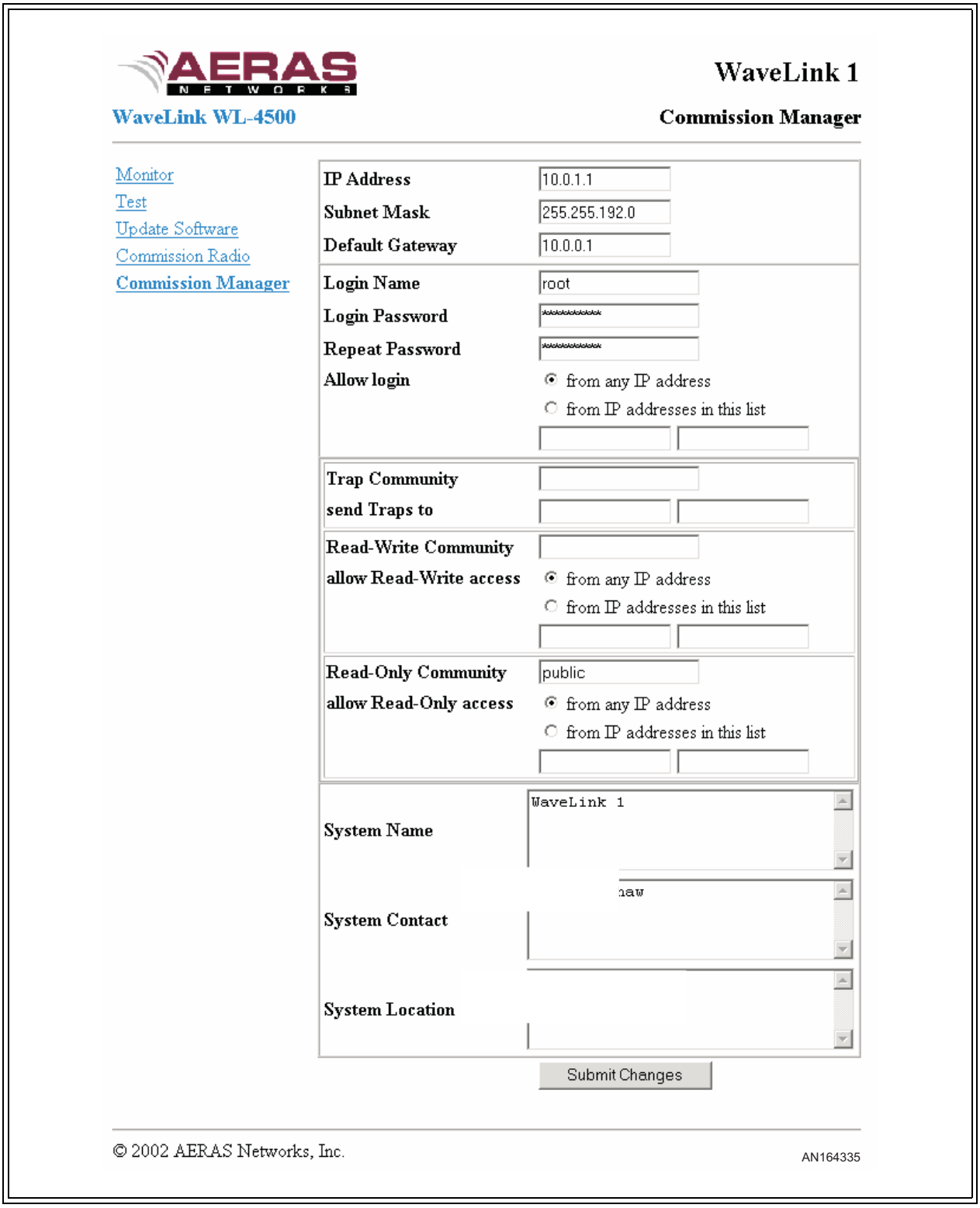

Figure 4-8 Typical Ethernet Aeras WaveLink Commission Manager Web Page

Testing a DS-3 or E3 Aeras WaveLink

18 On the Commission Manager Interfaces page, select the link for the Test page. The web browser displays the Test page, similar to the sample shown in Figure 4-9.

19 On the Test page, select the BERT + Radio Loopback test, and select One Minute. Select Start Test to verify the internal Aeras WaveLink circuitry before installation.

When the BERT + Radio Loopback test is complete, the Aeras WaveLink has been configured, and the internal signal generation, transmit, receive, and detecting circuitry of the Aeras WaveLink has been tested.

20 On the Test page, select the link for the Commission Radio page. The web browser again displays the Commission Radio page, similar to the sample shown in Figure 4-5.

21 Continue with Step 26.

Testing an Ethernet Aeras WaveLink

22 Connect an external ethernet device to the ETHERNET 1 or 2 port on the Aeras WaveLink.

23 Use the external ethernet device to Ping the Aeras WaveLink at the local ethernet address configured in Step 13. Verify that the Aeras WaveLink responds to the Ping.

When the Ping test is complete, the Aeras WaveLink has been configured, and the internal ethernet circuitry of the Aeras WaveLink has been tested.

24 Disconnect the external ethernet device from the Aeras WaveLink.

25 Continue with Step 26.

> **STOP** Do not stand within 2 m (79 in.) of the front of the antenna for prolonged periods during Aeras WaveLink operation to avoid harmful RF radiation.

26 On the Commission Radio page, set the Tx Attenuation to disabled. This causes the Aeras WaveLink to transmit at the level set by the Maximum Transmit Power parameter.

27 Disconnect power from the Aeras WaveLink to prepare it for mounting in its final location.

28 Disconnect the Craft PC from the Aeras WaveLink.

29 (Only for Aeras WaveLinks with external antennas.) When you have configured a Aeras WaveLink with an external antenna, disconnect the external antenna or 50 Ohm load from the antenna port. This makes it easier to mount the Aeras WaveLink and the external antenna in their final locations.

After completing this section, the Aeras WaveLink radio is configured and partially tested, and is ready to install as described in Section 4-3.

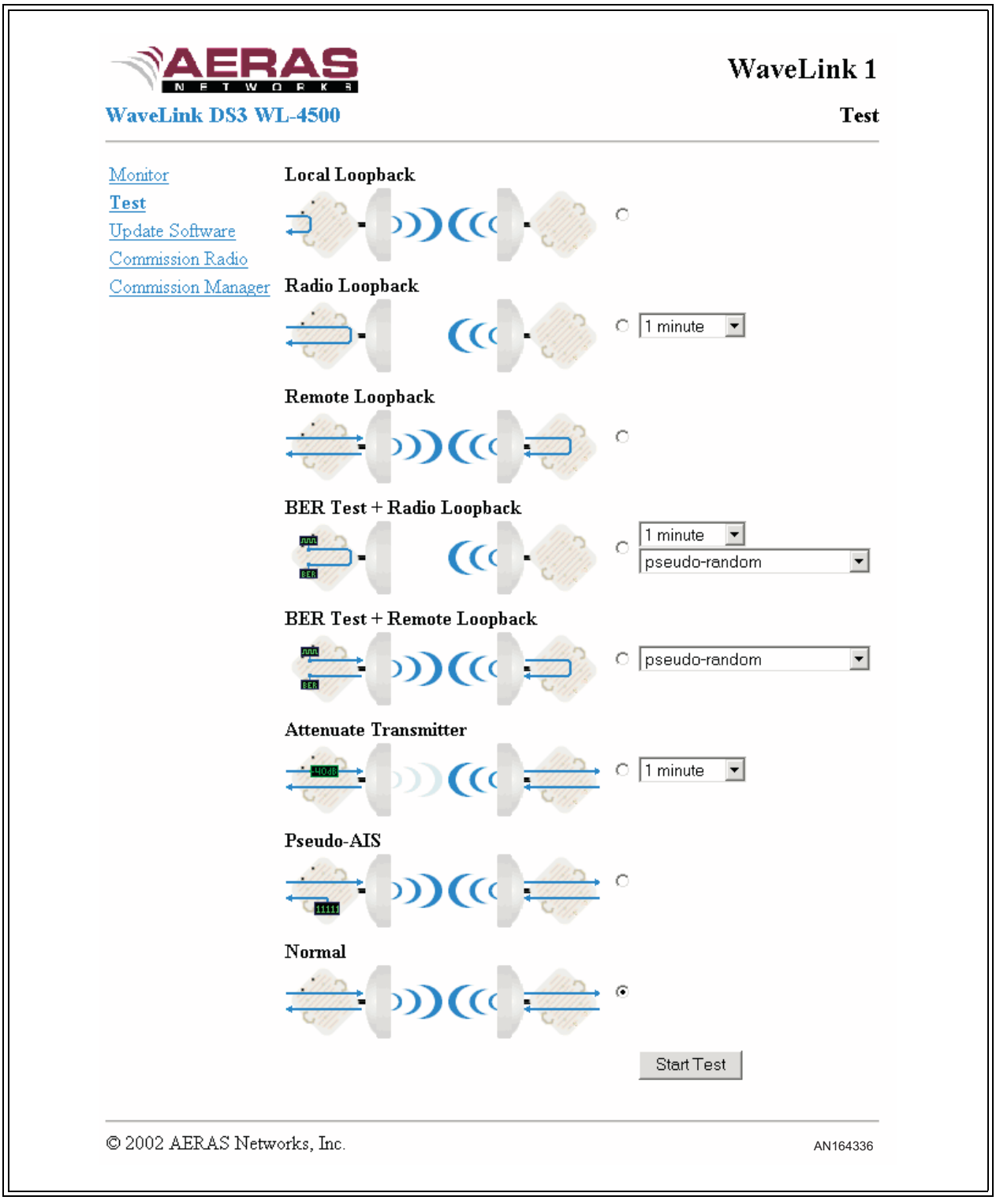

Figure 4-9 Typical Aeras WaveLink DS-3 Test Web Page

4-3 Mounting the Aeras WaveLink

The Aeras WaveLink radio is a sealed unit that installs on a pole. When the Aeras WaveLink is equipped with an integral antenna, there is no need to install an external antenna. When the Aeras WaveLink is equipped with an external antenna, you will mount the Aeras WaveLink as described in this section, then you will install the optional external antenna as described in Section 4-4.

> **NOTE** A pole is not supplied with the Aeras WaveLink and should be in place before attempting installation.

After completing the configuration steps in Section 4-2, continue with the following steps to mount the Aeras WaveLink on a pole.

> **STOP** The body performing the installation is the responsible for preventing any contact or induction with mains lines at any voltage.

> **STOP** To comply with FCC RF exposure requirements, antennas used with Aeras WaveLinks must be rigidly mounted on permanent outdoor structures to provide 2 m (79 in.) or more separation from all persons during Aeras WaveLink operation. Installers should refer to Table 3-2 when installing factory-supplied antennas, or the contact the customer-supplied antenna manufacturer for applicable gain and type restrictions to ensure compliance.

4-3.1 Installing the Aeras WaveLink Mounting Bracket

> **NOTE** When the Aeras WaveLink is to be installed with an external antenna, make sure that the Aeras WaveLink and the antenna are mounted close enough to use the factory-supplied 2 m (6.5 ft.) RF cable to connect them. Also make sure that the Aeras WaveLink and external antenna are not so close that they interfere with each other during antenna alignment.

30 Install the pole-mount bracket as described in the appropriate section below.

Non-Adjustable Single Aeras WaveLink Bracket

A See Figure 4-10. Assemble the two steel band clamps to the pole mount bracket.

B Wrap the clamps around the pole and finger tighten their clamp screws. The bracket should be able to pivot around the pole, allowing horizontal alignment.

C Install the pole-mount bracket:

- When you are installing a Aeras WaveLink with an integral antenna, use a compass or optical aid to coarsely align the pole mount bracket with the far-end antenna location. Continue with Section 4-3.2.
- When you are installing a Aeras WaveLink with an external antenna, position the bracket near enough to the planned antenna location so that the Aeras WaveLink does not interfere with antenna alignment and so the factory-supplied 2 m (6.5 ft.) antenna cable can be connected to both units. Continue with Section 4-3.2.

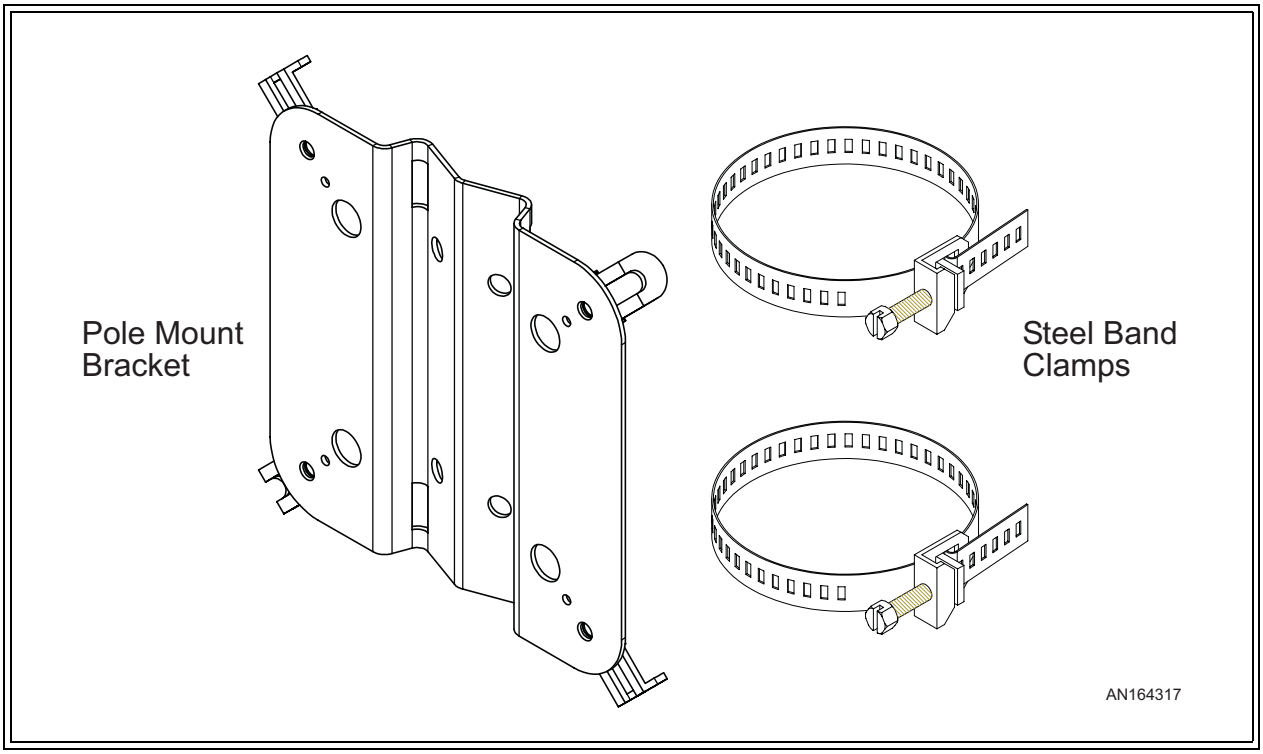

Figure 4-10 Non-Adjustable Elevation Single Aeras WaveLink Bracket

Adjustable Elevation Single Aeras WaveLink Bracket

A See Figure 4-11. Assemble the two steel band clamps to the pole mount bracket.

B Wrap the clamps around the pole and finger tighten their clamp screws. The bracket should be able to pivot around the pole, allowing horizontal alignment.

C Install the pole-mount bracket. Use a compass or optical aid to coarsely align the pole mount bracket with the far-end antenna location.

D Assemble the rest of the bracket parts as shown in Figure 4-11. Use a level to ensure that the coarse elevation is 0°. Continue with Section 4-3.2.

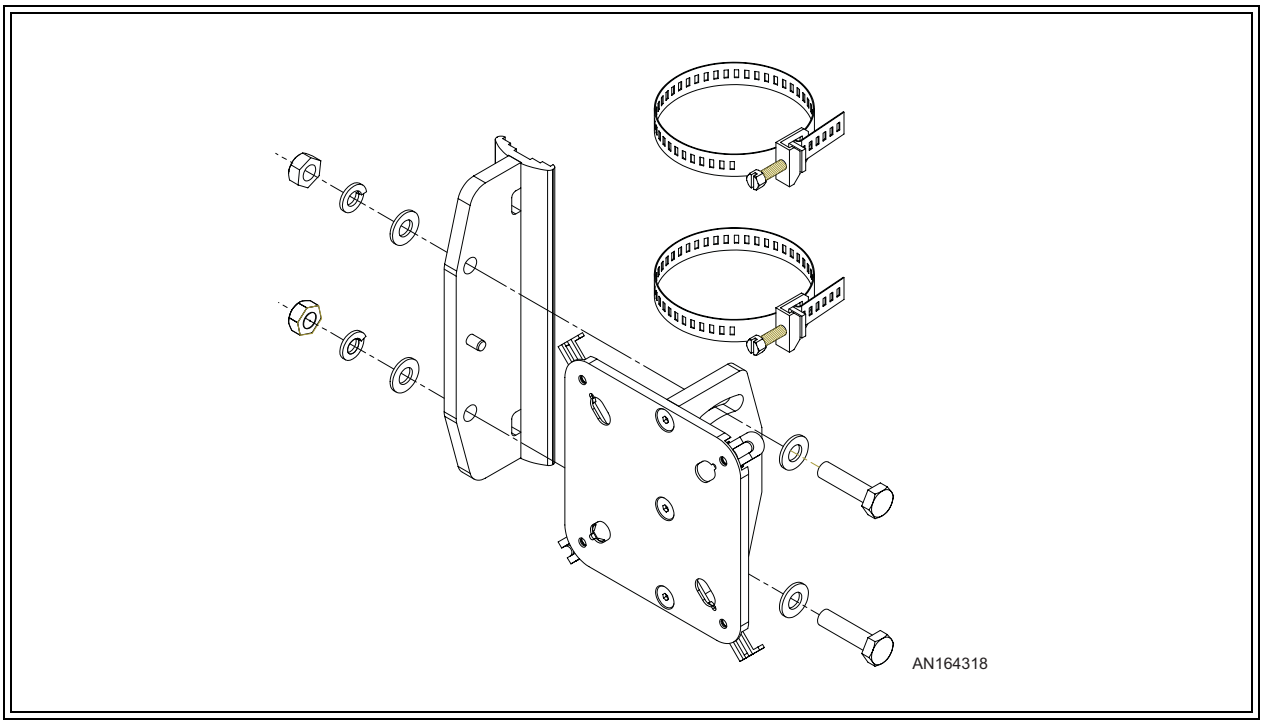

Figure 4-11 Adjustable Elevation Single Aeras WaveLink Bracket

Adjustable Elevation Dual Aeras WaveLink Bracket

A Assemble the pole mount brackets and associated nuts, bolts, and washers on the pole as shown in Figure 4-12. Finger tighten the four nuts. The pole mount bracket assembly should be able to pivot around the pole, allowing coarse horizontal alignment.

B Use a compass or optical aid to coarsely align the pole mount bracket assembly between the far-end antenna locations.

NOTE The pole mount bracket assembly does not have to be closely aligned with either of the far-end antennas, as the Aeras WaveLink mounting bracket assemblies allow a wide range of elevation and azimuth alignment.

C Tighten the four pole mount bracket assembly bolts to 20-25 foot-pounds (27-34 n.m).

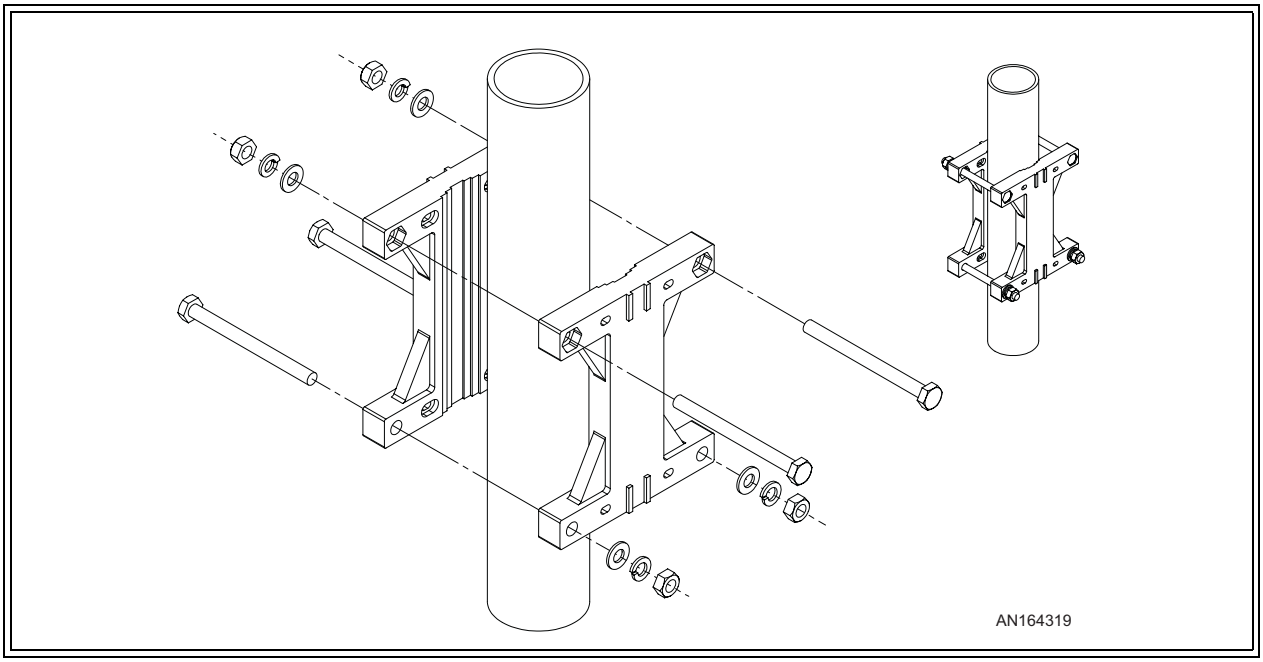

Figure 4-12 Adjustable Elevation Dual Aeras WaveLink Pole Mount Bracket Assembly

D On each side of the pole mount bracket assembly, assemble the rest of the Aeras WaveLink mounting bracket assembly parts as shown in Figure 4-13.

E Finger tighten the six bolts on each Aeras WaveLink mounting bracket assembly. Each Aeras WaveLink mounting bracket assembly should be able to pivot around the pole and elevate up and down, allowing fine azimuth and elevation alignment.

F Use a level to ensure that the coarse elevation for each Aeras WaveLink mounting bracket assembly is 0°.

G Continue with Section 4-3.2.

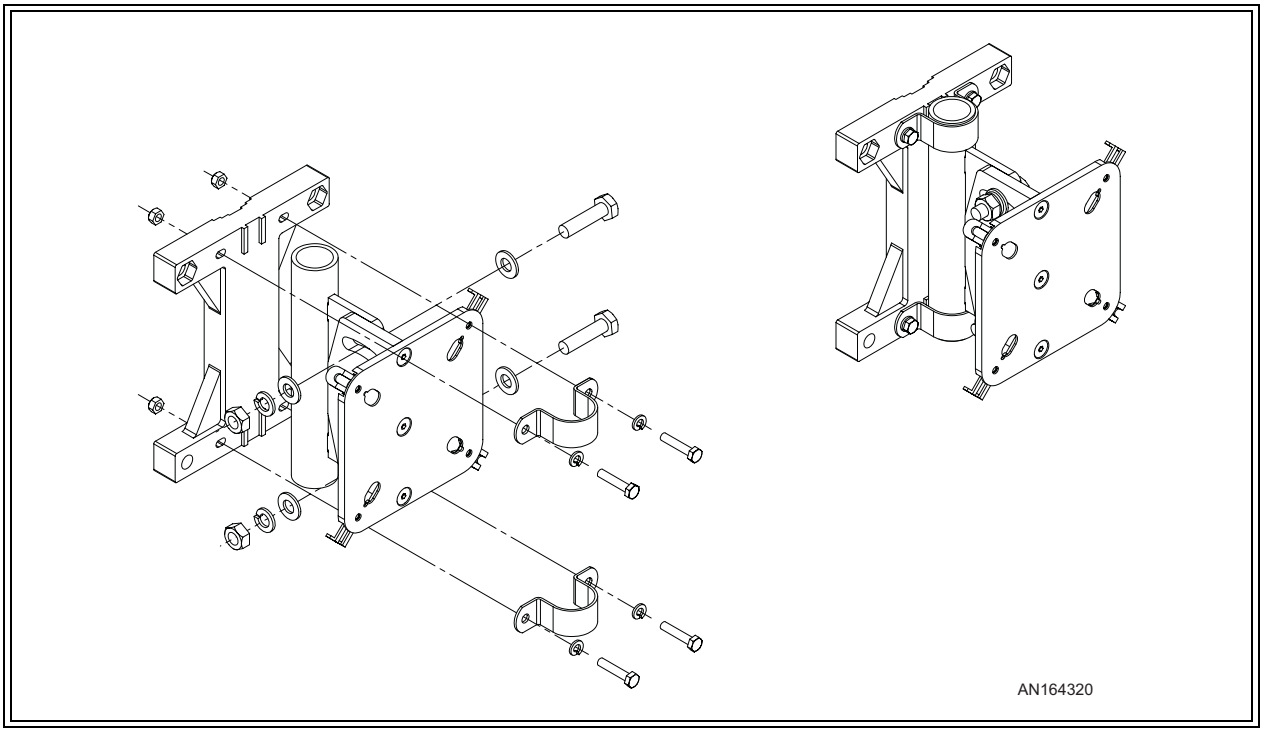

Figure 4-13 Adjustable Elevation Dual Aeras WaveLink Mounting Bracket Assembly (one side only)

4-3.2 Attaching the Aeras WaveLink to the Mounting Bracket

Selecting the Aeras WaveLink Integral Antenna Polarization

> **NOTE** Both ends of the radio link must be identically polarized. The planned polarization is available from the filled-out copy of the Radio Link Planning Worksheet from Chapter Three.

When the Aeras WaveLink is equipped with an integral antenna, how it is mounted determines the horizontal or vertical polarization. The Aeras WaveLink mounting brackets are designed to preserve the selected polarization until the Aeras WaveLink is removed from its bracket.

- When the Aeras WaveLink is equipped with an external antenna, skip this section and continue with Step 31.
- See Figure 4-14. The Aeras WaveLink case is embossed with an arrow indicating the integral antenna polarization. Point the arrow up for vertical, and sideways for horizontal polarization.

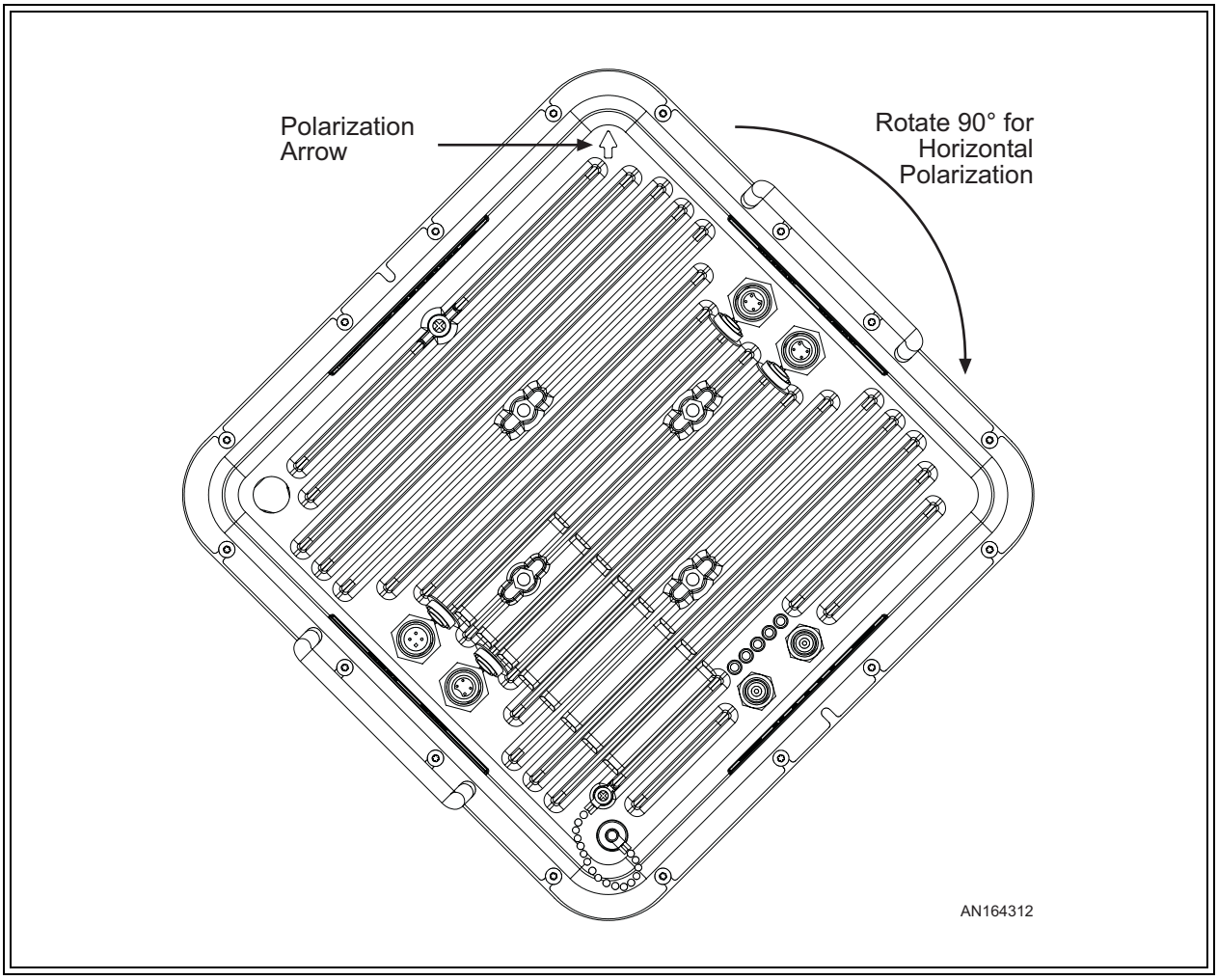

Figure 4-14 Setting the Aeras WaveLink Polarization -- Vertical Polarization Shown

Attaching the Aeras WaveLink

31 See Figure 4-14, Figure 4-15 and Figure 4-16.

32 Orient the Aeras WaveLink as shown in Figure 4-14, and align it with the mounting bracket as shown in Figure 4-15. Note that the four mounting studs on the Aeras WaveLink should line up with the four slide clips on the bracket as shown in Figure 4-16.

NOTE When the Aeras WaveLink is equipped with an integral antenna, make sure that the antenna is properly polarized as described in the previous section.

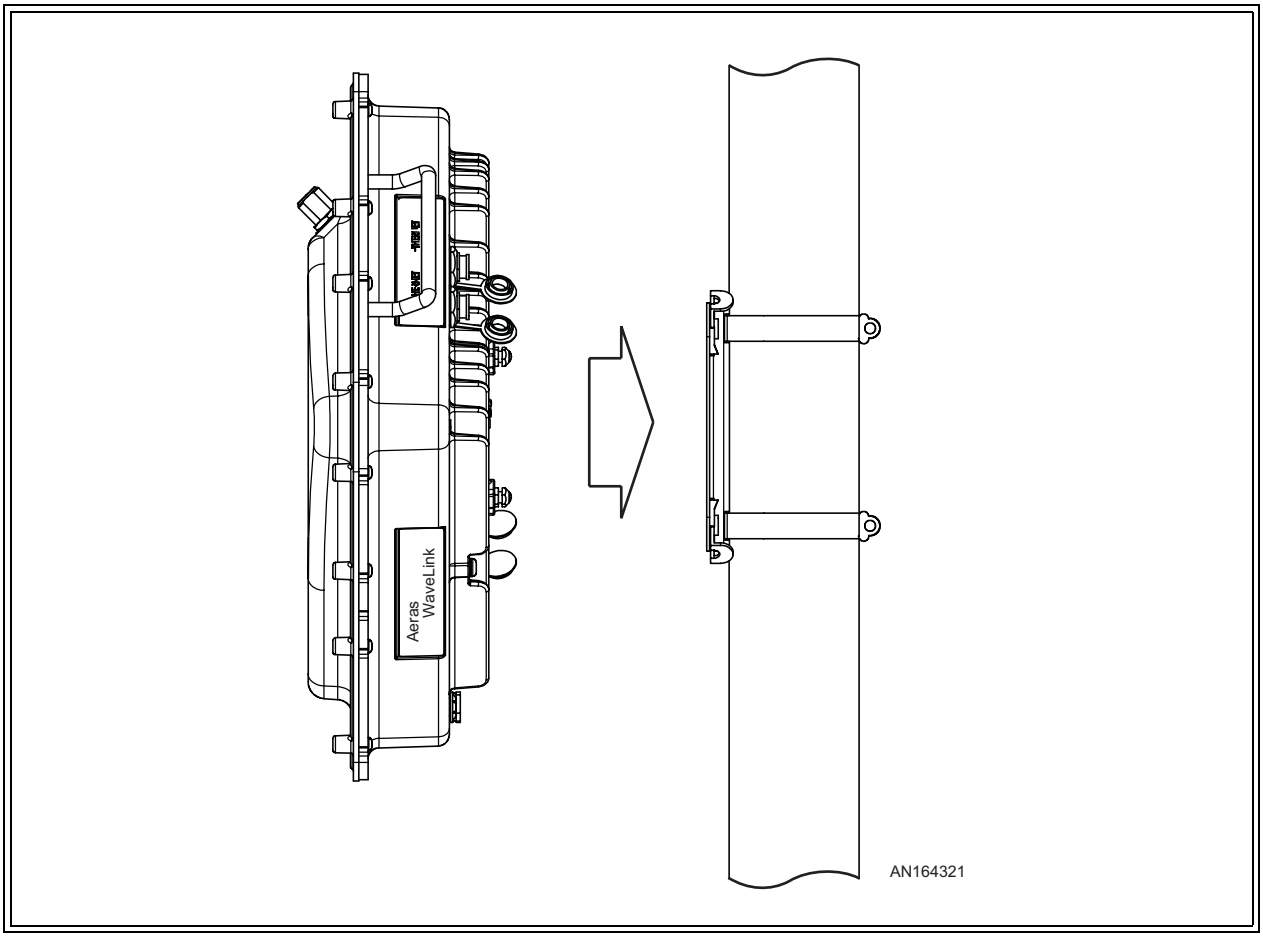

Figure 4-15 Attaching a 5.8 GHz Aeras WaveLink to a Typical Mounting Bracket

33 Secure the Aeras WaveLink to the bracket using the four (4) slide clips on the bracket as shown in Figure 4-16.

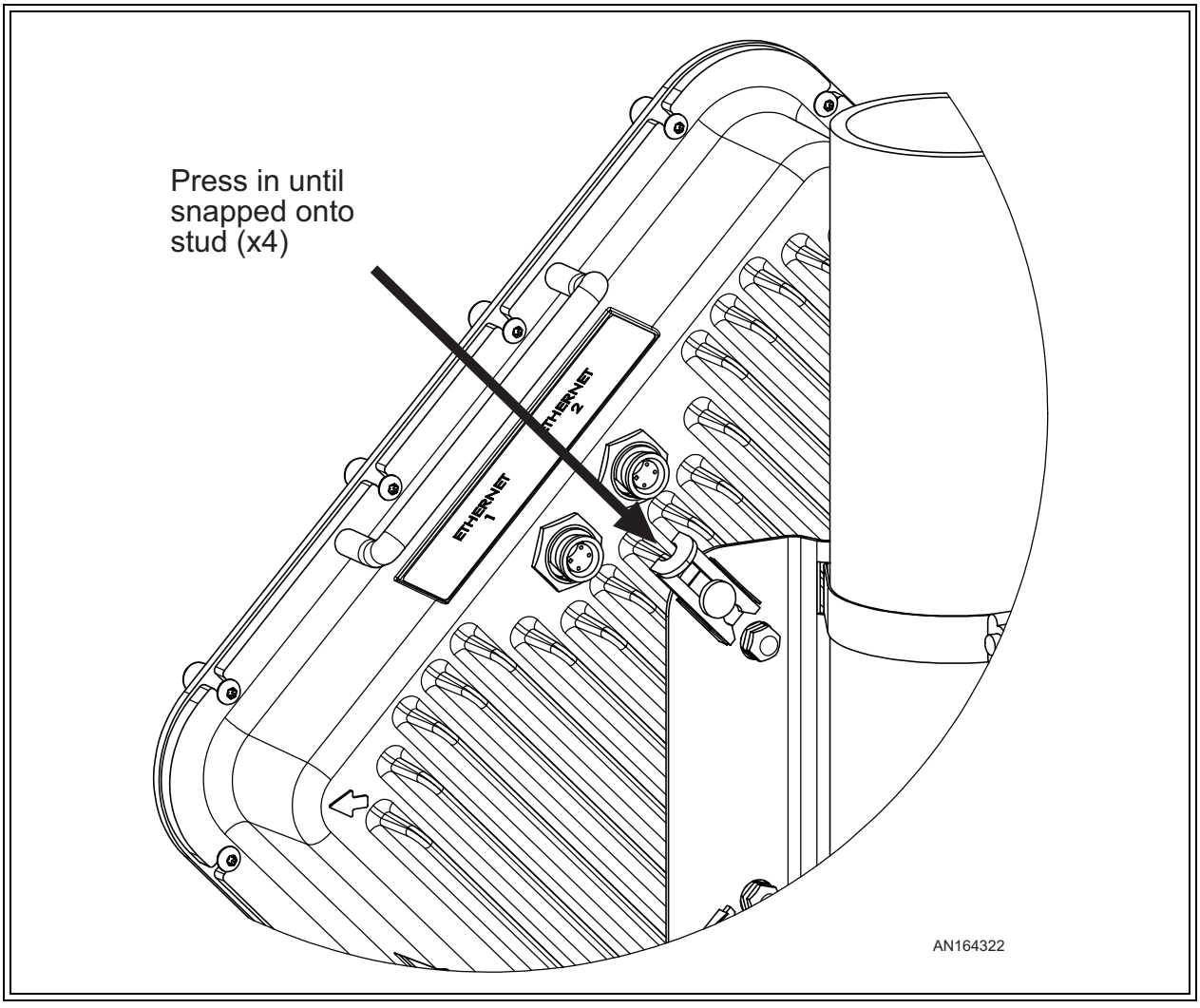

Figure 4-16 Locking the Slide Clips

The Aeras WaveLink is now connected to the mounting pole and coarsely aligned, if equipped with an integral antenna. Continue with Section 4-4.

4-4 External Antenna Installation (Optional)

This section is only used when you are installing a Aeras WaveLink with an external antenna. If you are installing a Aeras WaveLink with an integral antenna, skip this section and continue with Section 4-5.

> **NOTE**
> Installation, maintenance and removal of antenna systems requires qualified, experienced personnel. Aeras Networks installation instructions have been written for such personnel. Aeras Networks disclaims any liability or responsibility for the results of improper or unsafe installation practices.

Factory-Supplied Antennas

The factory-supplied antenna consists of a 61 cm (24 in.) or 122 cm (48 in.) solid parabolic reflector assembly, radome, band clamp, and Pole Mount. The Pole Mount is designed to attach the antenna to a vertical tower pipe of diameter 44 to 115 mm (1.75 to 4.5 in.). It also provides adjustment ranges of ±30° (fine) Elevation and ±20° (fine) Azimuth.

For the factory-supplied antenna specifications, refer to Appendix 2.

The Aeras WaveLink is usually attached to the same pole as the external antenna, as mounting the Aeras WaveLink close to the antenna preserves the low (-0.5 dBm) attenuation of the factory-supplied antenna cable. Continue with Section 4-4.1 to install the factory-supplied antenna mounting bracket and the external antenna.

Customer-Supplied Antennas

> **NOTE**
> The Aeras WaveLink may be shipped without an integral or external antenna. For instance, the customer may wish to use a larger external antenna for increased gain. If this is the case, mount the Aeras WaveLink as detailed in Section 4-3, and mount the customer-supplied antenna as described in the manufacturer's instructions.

4-4.1 Installing an External Antenna Mounting Bracket

> **STOP**
> To comply with FCC RF exposure requirements, antennas used with Aeras WaveLinks must be rigidly mounted on permanent outdoor structures to provide 2 m (79 in.) or more separation from all persons during Aeras WaveLink operation. Installers should contact the antenna manufacturer for applicable gain and type restrictions to ensure compliance.

NOTE External antennas have different mounting assemblies. As these assemblies are continually being updated for improved function, refer to the manufacturer's mounting instructions for the most recent mounting information.

34 Verify proper assembly of the azimuth clamp and/or shear stop clamp as described in the manufacturer's instructions. Securely attach the clamp to the mast pipe, aligning it with the antenna boresight direction, and square to the mast axis (elevation set level).

35 Verify proper assembly of the antenna assembly to the azimuth clamp and/or shear stop clamp as described in the manufacturer's instructions. Make sure the antenna assembly is rotated to the correct polarization as listed in filled-out Radio Link Planning Worksheet from Chapter Three.

36 Verify that the rough antenna assembly remains in correct azimuth alignment to the far-end Aeras WaveLink.

37 Ensure that the radome drain and lock nut are oriented downward for proper drainage (refer to Figure 4-17). When finished, fasten the locking nut(s).

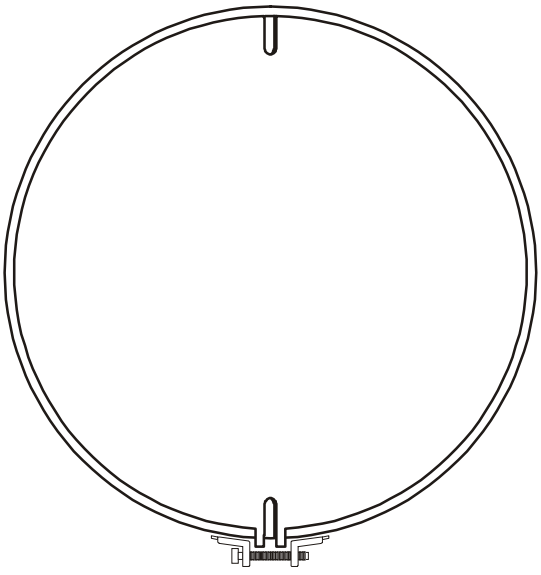

Figure 4-17 Typical Radome Panel Rotation

Supplemental Information

NOTE It is recommended that you not reuse a palnut that has already been fully tightened or deformed in any way. Replace used palnuts with new palnuts.

Inspect the antenna at least once a year to check its condition and to insure safe operation and maintenance. Qualified personnel, knowledgeable and experienced in antenna installations, are required for this inspection.

Weatherproofing the Type N Female Connector on Feeds

Remove the protective cover from the end of the feed and mate the connectors, screwing the male connector firmly onto the feed.

> ! After connecting the coaxial cable, wrap the Type N connector with the butyl rubber, squeezing it firmly around all joints to make a continuous seal. Finish the weatherproofing by wrapping the butyl rubber with several layers of black PVC tape (not supplied).

38 Before leaving the installation, check that all hardware on the mount, shroud, radome, and feed is tight and that nuts are locked in place.

Continue with Section 4-5 to complete the Aeras WaveLink installation.

4-5 Completing the Aeras WaveLink Installation

The Aeras WaveLink and associated antenna are now mounted on the pole, and coarse-aligned with the far-end antenna. Continue with the following steps to complete the Aeras WaveLink installation.

4-5.1 Mounting the Lightning Arrestor

> ! Aeras Networks strongly recommends that you use a lightning arrestor, such as the Transtector Lightning Arrestor Kit, at the cable entry to the power, DS-3/E3 and/or Ethernet equipment structure.

39 Install a lightning arrestor according to the manufacturer's instructions, and according to the guidelines in Appendix 4 to lessen the chance of damage from lightning strikes.

4-5.2 Routing the Data and Power Cables from the Lightning Arrestor

40 Route cables from the lightning arrestor through the cable entry to the power, DS-3/E3 and/or Ethernet equipment.

Leave a minimum of 38 cm (15 inches) of service loop in the cables where they attach to the lightning arrestor. Avoid tight bends during cable routing and fastening.

41 Connect the power, DS-3/E3 and/or Ethernet cables to the power, DS-3/E3 and/or Ethernet equipment and the lightning arrestor.

42 Route power, DS-3/E3 and/or Ethernet cables from the lightning arrestor to the Aeras WaveLink.

Using cable ties and/or standoffs, fasten these cables to the structure at 3 m (10 ft.) intervals. Leave a minimum of 38 cm (15 inches) of service loop in the cables where they attach to the Aeras WaveLink and the lightning arrestor. Avoid tight bends during cable routing and fastening.

> **NOTE**
> The Aeras WaveLink has two ethernet ports, and includes and internal ethernet switch. However, typical ethernet hubs and switches do not have spanning tree capability. MAKE SURE that you make only ONE ethernet connection from a hub or switch to the Aeras WaveLink to prevent broadcast storms.

43 Connect the power, DS-3/E3 and/or Ethernet cables to the lightning arrestor.

> **STOP**
> When you apply power to the Aeras WaveLink, it starts transmitting. Do not stand within 2 m (79 in.) of the front of the antenna for prolonged periods during Aeras WaveLink operation to avoid harmful RF radiation.

44 Connect the power, DS-3/E3 and/or Ethernet cables to the Aeras WaveLink. See Figure 4-1 and Table 4-1 for the locations and descriptions of the Aeras WaveLink connectors.

45 Check the LEDs for proper operation. See Figure 4-1 and Table 4-1 for the locations and descriptions of the Aeras WaveLink LEDs.

- When power is properly applied to the Aeras WaveLink, the PWR/LCL ALARM LED will be on.
- Because the radio link has not yet been established, the RF LINK LED should be off.
- When the DS-3/E3 equipment is or is not transmitting data to the Aeras WaveLink, the DATA LED should be on or off, respectively.
- When the Ethernet equipment is transmitting data to the Aeras WaveLink, the ENET 1 and/or ENET 2 LEDs should be on or flashing. When the Ethernet equipment is not transmitting data to the Aeras WaveLink, the ENET 1 and/or ENET 2 LEDs should be off or flashing as local data is received.

If any of these conditions is not true, troubleshoot the associated equipment and cables.

4-5.3 Grounding the Aeras WaveLink and Antenna

The Aeras WaveLink and the optional external antenna have grounding lugs. Make sure they are connected to a good earth ground using the guidelines in Appendix 4.

46 Following the guidelines in Appendix 4, connect a customer-supplied solid wire or tape (not braided) grounding wire to the grounding lug on the back of the Aeras WaveLink. See Figure 4-18 for the grounding lug location.

Connect the other end of this cable to a proper grounding point.

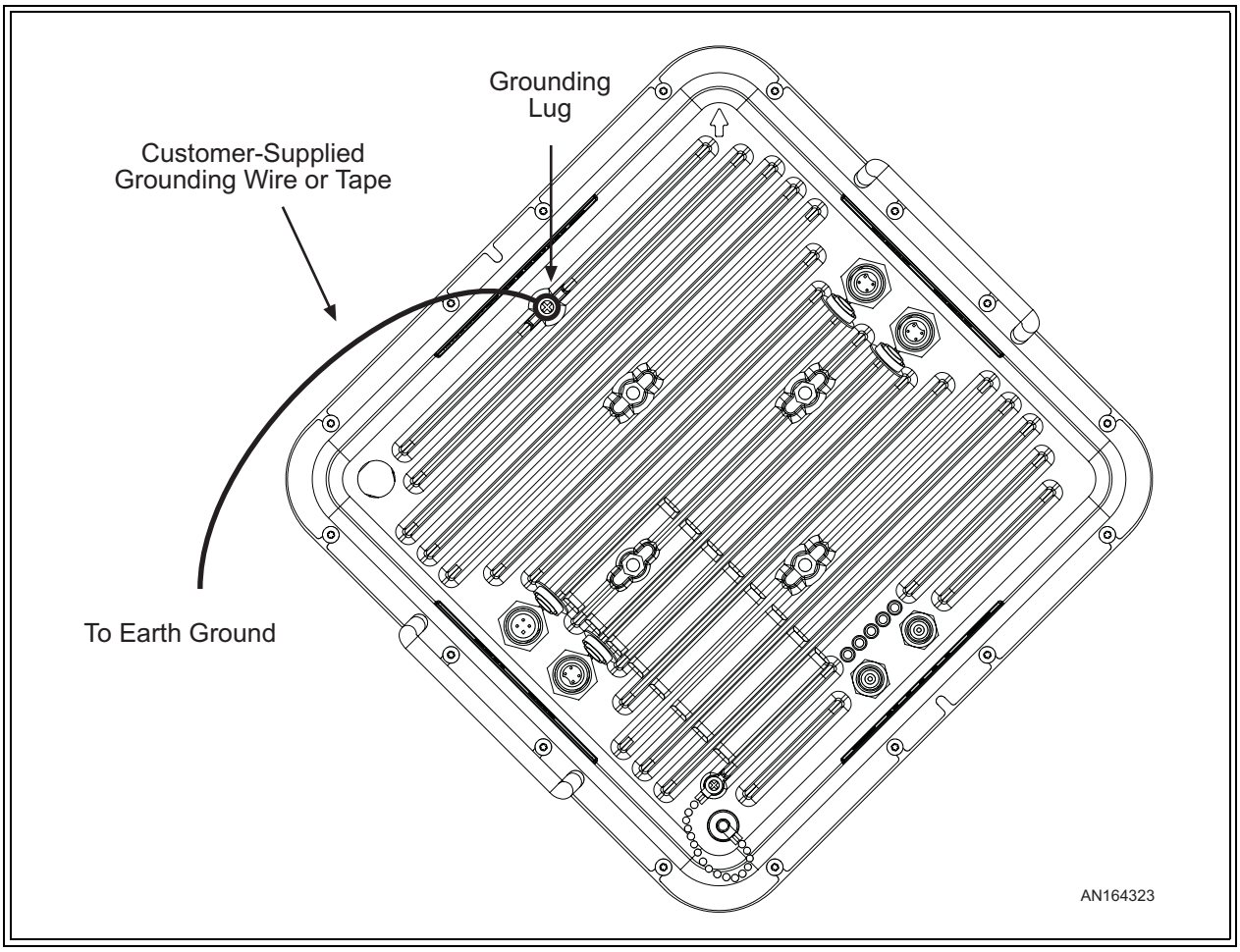

Figure 4-18 Connecting an Earth Ground to the Aeras WaveLink

47 If the Aeras WaveLink is equipped with an external antenna, follow the guidelines in Appendix 4 and connect a customer-supplied solid wire or tape (not braided) grounding wire to the grounding lug on the back of the antenna.

Connect the other end of this wire to a proper grounding point.

4-5.4 Sealing the Data and Power Cable Connectors

The cables that are terminated outdoors must be sealed at each exposed end to prevent moisture incursion and damage. For all exposed connectors, including those between an external antenna and the Aeras WaveLink, perform the following:

48 Wrap each connector with vinyl or plastic electrical tape.

49 Wrap the vinyl or plastic electrical tape with butyl rubber amalgamating tape to prevent moisture from permeating the connector.

50 Wrap the butyl rubber amalgamating tape with vinyl or plastic electrical tape.

Continue with Section 4-6 to fine tune the antenna's azimuth and elevation.

4-6 Aligning the Antenna

This section includes steps used to fine tune the antenna alignment using RSSI as measured using a voltmeter. This part of the installation procedure is most easily accomplished with installers at each end of the radio link who are in communication with one another.

> **!** Failure to follow this antenna alignment procedure may damage your equipment and may render the radio unusable. Read through the entire procedure before attempting adjustment. Contact Aeras Networks with any questions.

When you are aligning a Aeras WaveLink with an integral antenna on a single adjustable elevation pole mount, continue with Section 4-6.1. When you are aligning a Aeras WaveLink with an integral antenna on a dual adjustable elevation pole mount, continue with Section 4-6.2. When you are aligning a Aeras WaveLink with an external antenna, continue with Section 4-6.3.

> **STOP** When you apply power to the Aeras WaveLink, it starts transmitting. Do not stand within 2 m (79 in.) of the front of the antenna during Aeras WaveLink operation to avoid harmful RF radiation.

> **NOTE** The Aeras WaveLink with integral antenna is normally mounted on one of the adjustable elevation pole mounts to allow most accurate alignment and best system gain. If you are attempting to align a Aeras WaveLink with integral antenna on a non-adjustable pole mount, adapt the following procedure, or contact Aeras Networks for fully-adjustable mounts.

4-6.1 Integral Antenna on a Single Adjustable Elevation Mount

Perform Step 51 through Step 56 on the local radio. Then, repeat these steps for the remote radio. See Figure 4-11 for the Single Pole Mount illustration.

51 Remove the cap from the BNC connector of the remote radio. Attach the hand-held voltmeter and BNC test lead to the test point.

52 Fine Azimuth Alignment -- Rotate the Aeras WaveLink mounting bracket on the pole until the proper azimuth alignment is achieved. Torque the steel band clamps on the single Aeras WaveLink non-adjustable elevation pole mount to RR foot-pounds (SS n.m). Peak the alignment for maximum voltage at the remote antenna. Expected voltage is more than +1 VDC. The adjustment should be slowly tuned through the peak, and reset at the absolute maximum before tightening the straps.

53 Fine Elevation Alignment -- Rotate the Aeras WaveLink mounting bracket until the proper elevation alignment is achieved. Torque the two elevation locking bolts to 20 to 25 foot-pounds (27 to 34 n.m). Peak the alignment for maximum voltage at the remote antenna. Expected voltage is more than +1 VDC. The adjustment should be slowly tuned through the peak, and reset at the absolute maximum before tightening the bolts.

> **NOTE** Alignment for each antenna should be alternated at least twice before confirming the final setting.

54 Disconnect the hand-held voltmeter and BNC test lead from the RSSI port.

55 Rotate the RSSI port cap about 90 degrees to seal the Aeras WaveLink case.

56 Recheck the Aeras WaveLink LEDs. See Figure 4-1 and Table 4-1 for the locations and descriptions of the Aeras WaveLink LEDs.

- When power is properly applied to the Aeras WaveLink, the PWR/LCL ALARM LED will be on.
- Because the radio link has been established, the RF LINK LED should be on.
- When the DS-3/E3 equipment is or is not transmitting data to the Aeras WaveLink, the DATA LED should be on or off, respectively.
- When the Ethernet equipment is transmitting data to the Aeras WaveLink, the ENET 1 and/or ENET 2 LEDs should be on or flashing. When the Ethernet equipment is not transmitting data to the Aeras WaveLink, the ENET 1 and/or ENET 2 LEDs should be off.

If any of these conditions is not true, troubleshoot the associated equipment and cables.

The Aeras WaveLink is now mounted and aligned. Continue with Section 4-7 for acceptance tests.

4-6.2 Integral Antenna on a Dual Adjustable Elevation Mount

Perform Step 57 through Step 62 on the local radio. Then, repeat these steps for the remote radio. See Figure 4-13 for the Dual Pole Mount illustration.

57 Remove the Aeras WaveLink cap from the BNC connector of the remote radio. Attach the hand-held voltmeter and BNC test lead to the test point.

58 Fine Azimuth Alignment -- Rotate the Aeras WaveLink on its mounting bracket until the proper azimuth alignment is achieved. Torque the four small azimuth locking bolts to 4 to 6 foot-pounds (5.5 to 8 n.m). Peak the alignment for maximum voltage at the remote antenna. Expected voltage is more than +1 VDC. The adjustment should be slowly tuned through the peak, and reset at the absolute maximum before tightening the bolts.

59 Fine Elevation Alignment -- Rotate the Aeras WaveLink mounting bracket until the proper elevation alignment is achieved. Torque the two large elevation locking bolts

to 20 to 25 foot-pounds (27 to 34 n.m). Peak the alignment for maximum voltage at the remote antenna. Expected voltage is more than +1 VDC. The adjustment should be slowly tuned through the peak, and reset at the absolute maximum before tightening the bolts.

> **NOTE** Alignment for each antenna should be alternated at least twice before confirming the final setting.

60 Disconnect the hand-held voltmeter and BNC test lead from the RSSI port.

61 Finger-tighten the RSSI port cap to seal the Aeras WaveLink case.

62 Recheck the Aeras WaveLink LEDs. See Figure 4-1 and Table 4-1 for the locations and descriptions of the Aeras WaveLink LEDs.

- When power is properly applied to the Aeras WaveLink, the PWR/LCL ALARM LED will be on.
- Because the radio link has been established, the RF LINK LED should be on.
- When the DS-3/E3 equipment is or is not transmitting data to the Aeras WaveLink, the DATA LED should be on or off, respectively.
- When the Ethernet equipment is transmitting data to the Aeras WaveLink, the ENET 1 or ENET 2 LEDs should be on or flashing. When the Ethernet equipment is not transmitting data to the Aeras WaveLink, the ENET 1 and/or ENET 2 LEDs should be off.

If any of these conditions is not true, troubleshoot the associated equipment and cables.

The Aeras WaveLink is now mounted and aligned. Continue with Section 4-7 for acceptance tests.

4-6.3 External Antenna on Antenna-Specific Mount

Perform Step 63 through Step 70 on the local radio. Then, repeat these steps for the remote radio.

63 Remove the Aeras WaveLink cap from the BNC connector of the remote antenna. Attach the hand-held voltmeter and BNC test lead to the test point.

64 Fine Azimuth Alignment -- Rotate the azimuth fine adjust bolt of the local antenna until the proper azimuth alignment is achieved. Torque the azimuth locking nuts to the manufacturer's recommendations. Peak the alignment for maximum voltage at the remote antenna. Expected voltage is more than +1 VDC. The adjustment should be slowly tuned through the peak, and reset at the absolute maximum before tightening the nuts.

65 Fine Elevation Alignment -- Rotate the elevation fine adjust bolt of the local antenna until the proper elevation alignment is achieved. Torque the elevation locking nuts to 16 ft-lbs (22 n.m). Peak the alignment for maximum voltage at the remote antenna. Expected voltage is more than +1 VDC. The adjustment should be slowly

tuned through the peak, and reset at the absolute maximum before tightening the nuts.

> **NOTE** Alignment for each antenna should be alternated at least twice before confirming the final setting.

66 Radome Panel Rotation -- The drain groove of the Radome should be pointed downward for drainage (refer to Figure 4-17). When finished, fasten the locking nut.

> **NOTE** When performing this procedure, take care not to change the alignment performed in the previous paragraphs.

67 Disconnect the hand-held voltmeter and BNC test lead from the RSSI port.

68 Finger-tighten the RSSI port cap to seal the Aeras WaveLink case.

69 Recheck the Aeras WaveLink LEDs. See Figure 4-1 and Table 4-1 for the locations and descriptions of the Aeras WaveLink LEDs.

- When power is properly applied to the Aeras WaveLink, the PWR/LCL ALARM LED will be on.
- Because the radio link has been established, the RF LINK LED should be on.
- When the DS-3/E3 equipment is or is not transmitting data to the Aeras WaveLink, the DATA LED should be on or off, respectively.
- When the Ethernet equipment is transmitting data to the Aeras WaveLink, the ENET 1 or ENET 2 LEDs should be on or flashing. When the Ethernet equipment is not transmitting data to the Aeras WaveLink, the ENET 1 and/or ENET 2 LEDs should be off.

If any of these conditions is not true, troubleshoot the associated equipment and cables.

70 To secure the Aeras WaveLink(s) to the pole, torque the steel band clamps on the single Aeras WaveLink pole mount to RR foot-pounds (SS n.m), or torque the large bolts to 20 to 25 foot-pounds (27 to 34 n.m) and torque the small bolts to 4 to 6 foot-pounds (5.5 to 8 n.m) on the dual adjustable elevation pole mount.

4-7 Acceptance Testing

This section describes the tests used to verify that the Aeras WaveLink data input circuitry, near-end Aeras WaveLink radio, radio link, and far-end Aeras WaveLink radio are installed properly and operating correctly.

71 Verify that the physical installation is correct. Use Table 4-3 to sign off the individual checks.

Table 4-3 Physical Installation Checklist

Checklist Item	Verified	Inspector	Date
Is the mounting pipe securely connected to the mounting structure?			
Is the Aeras WaveLink securely connected to the mounting pipe?			
If equipped, is the external antenna securely connected to the mounting pipe?			
Is the lightning protection above the Aeras WaveLink and antenna properly grounded?			
Is the Aeras WaveLink properly grounded?			
If equipped, is the external antenna properly grounded?			
Is the lightning arrestor at the entry to the equipment enclosure properly grounded?			
Is all cabling to the Aeras WaveLink properly routed (no sharp bends and properly attached)?			
Are all exposed connectors properly sealed against moisture?			
Are all unused connectors capped off or otherwise sealed against moisture?			
Is the internal or external antenna polarization correct (as indicated on the back of the unit)?			

72 Verify that the electrical connections are correct. Use Table 4-4 to sign off the individual checks.

Table 4-4 Electrical Connection Checklist

Checklist Item	Verified	Inspector	Date
Is the proper voltage supplied to the Aeras WaveLink (PWR/LCL ALM LED on)?			
Is the Aeras WaveLink receiving signal from the radio link (RF LINK LED on)?			
When the Aeras WaveLink is connected to DS-3 or E3 equipment, is the Aeras WaveLink receiving the expected signal (DATA LED on)?			

Table 4-4 Electrical Connection Checklist (continued)

Checklist Item	Verified	Inspector	Date
When the Aeras WaveLink is connected to Ethernet equipment on port ETHERNET 1, is the Aeras WaveLink receiving the expected signal (ENET 1 LED on or flashing)?			
When the Aeras WaveLink is connected to Ethernet equipment on port ETHERNET 2, is the Aeras WaveLink receiving the expected signal (ENET 2 LED on or flashing)?			

The next series of acceptance tests requires you to log in to the built-in web server with a computer equipped with a web browser.

73 Connect your computer to the Aeras WaveLink through the Ethernet equipment connected to the ETHERNET 1 or ETHERNET 2 port.

74 Log in to the Aeras WaveLink built-in web server to display the Monitor page as described in Section 4-2.2.

75 Make sure the Automatic Tx Power Control indicated in the lower half of the Monitor page is set to Disabled.

76 Record the RSSI indicated at the top of the Monitor page. Save this number for later troubleshooting.

77 When you are acceptance testing DS-3 or E3 versions of the Aeras WaveLink, continue with Step 78. When you are acceptance testing Ethernet versions of the Aeras WaveLink, continue with Step 79.

Testing DS-3 and E3 Aeras WaveLinks

78 Go to the Test page and verify that the Aeras WaveLink passes the tests in Table 4-5.

Table 4-5 DS-3 and E3 Internal Circuit and Radio Link Checklist

Checklist Item	Verified	Inspector	Date
Does the Aeras WaveLink input circuitry and DS-3/E3 cabling work properly? (Set up Local + Remote Loopback and verify that the DS-3/E3 equipment is receiving the looped-back signal it is transmitting to the Aeras WaveLink.)			
Does the Aeras WaveLink radio circuitry work properly? (Set up Radio Loopback and verify that the DS-3/E3 equipment is receiving the looped-back signal it is transmitting to the Aeras WaveLink.)			

Table 4-5 DS-3 and E3 Internal Circuit and Radio Link Checklist (continued)

Checklist Item	Verified	Inspector	Date
Do the near-end and far-end Aeras WaveLink radio circuits and radio paths work properly? (Set up BER Test and verify that the near-end Aeras WaveLink is receiving the looped-back BER test signal it is transmitting to the far-end Aeras WaveLink.)			
Does the end-to-end radio link work properly? (Select No Test and verify that the DS-3/E3 equipment at both ends of the radio link are receiving the signal transmitted to it by the remote DS-3/E3 equipment.)			

Testing Ethernet Aeras WaveLinks

79 Verify that the Aeras WaveLink passes the tests in Table 4-6. Note that this test uses ethernet pings from to ensure that the ethernet paths and links are working properly.

Table 4-6 Ethernet Internal Circuit and Radio Link Checklist

Checklist Item	Verified	Inspector	Date
Does the near-end Aeras WaveLink input circuitry and Ethernet cabling work properly? (Use external equipment to ping the near-end Aeras WaveLink to verify that its Ethernet equipment is responding correctly.)			
Do the near-end and far-end Aeras WaveLink radio circuits and radio paths work properly? (Use external equipment to ping the far-end Aeras WaveLink to verify that its Ethernet equipment is responding correctly.)			
Does the end-to-end radio link work properly? (Connect a known-good external ethernet equipment to the far-end Aeras WaveLink ETHERNET 1 or ETHERNET 2 connector. Use external equipment connected to the near-end Aeras WaveLink to ping the external equipment connected to the far-end Aeras WaveLink to verify that its Ethernet equipment is responding correctly.)			

When all of the acceptance tests in this section have been completed and all Checklist items have been verified, the Aeras WaveLink radio link has been verified. The Inspector marks for all tested items constitute acceptance of the Aeras WaveLink equipment and the associated radio link.

Five

Final Aeras WaveLink Setup

The user is required to finish configuring the Aeras WaveLink after physical installation. The Aeras WaveLink includes a built-in HTML-based web server, which includes configuration, operating, monitoring and test pages. This web server can be accessed locally using a Web browser on a Craft PC, or remotely using any Web browser on the same Ethernet network as the Aeras WaveLink. The initial configuration has already been done using a Craft PC at the Aeras WaveLink site, and all other operation and maintenance tasks can be performed remotely or locally, as required.

This chapter details final Aeras WaveLink setup using a Craft PC, and provides step-by-step software update instructions.

NOTE This section assumes that the Aeras WaveLink has already been installed and acceptance-tested as described in Chapter Four. If all the steps in Chapter Four have not been completed, complete them before starting this section.

5-1 Post Acceptance Test Configuration

5-1.1 Curent Aeras WaveLink Status

This section includes instructions on how to complete the Aeras WaveLink configuration after it is installed, as described in Chapter Four. The Aeras WaveLink should be in the following state:

- Powered on.
- Antenna aligned with far end antenna.
- Acceptance tested.
- No loopbacks or other tests active.
- Carrying, or capable of carrying, payload data.
- Transmit attenuation disabled.
- Transmitting at minimum required transmit power (Automatic Tx Power Control disabled, unless required).

5-1.2 Final Aeras WaveLink Configuration

Obtain a copy of the information entered in Table 3-3, Radio Link Planning Worksheet, and continue with the following steps:

1. Record the RSSI level from Step 76 in Chapter Four for future reference. The Step 76 value is the RSSI level with Automatic Tx Power Control disabled
2. Connect your computer to the Aeras WaveLink through the Ethernet equipment connected to the ETHERNET 1 or ETHERNET 2 port.
3. Log in to the Aeras WaveLink built-in web server to display the Monitor page as described in Section 4-2.2.
4. Go to the Test page, and verify that No Test is selected.
5. Go to the Commission Radio page, and verify that the entries on this page match the entries in Table 3-3, Radio Link Planning Worksheet. Make sure the Tx Attenuation is set to No attenuation, and that Automatic Tx Power Control is set to Enable.
6. Go to the Commission Manager Interfaces page, and verify that the entries on this page match the entries in Table 3-3, Radio Link Planning Worksheet.

   You can upgrade the login security of the Aeras WaveLink at this time. If you want to restrict access to the Aeras WaveLink, consider the following:

   - If the Aeras WaveLink does not have a Login Name and Password, you can assign one now.
   - If the Aeras WaveLink allows login from any IP address, you may want to restrict login to only one or two IP addresses. MAKE SURE the Craft PC IP address is included if you select this option.
   - If the Aeras WaveLink is set to broadcast SNMP traps to the Public community, you can restrict broadcasts to a different community.
   - If the Aeras WaveLink is set to broadcast SNMP traps to multiple IP addresses, you can restrict broadcasts to fewer IP addresses.
   - If the Aeras WaveLink is set to allow read-write access from the Public community, you can restrict read-write access to a different community.
   - If the Aeras WaveLink is set to allow read-write access from any or multiple IP addresses, you can restrict read-write access to fewer IP addresses.
   - If the Aeras WaveLink is set to allow read-only access from the Public community, you can restrict read-only access to a different community.
   - If the Aeras WaveLink is set to allow read-only access from any IP address, you can restrict read-only access to fewer IP addresses.
7. When required, make any security upgrades as described in Step 6.

The Aeras WaveLink is now fully configured, tested, and operational, and should continue to operate unattended. Continue with Chapter Six for monitoring and trend analysis, and refer to Chapter Seven for troubleshooting information.

5-2 Updating the Aeras WaveLink Software

> This procedure will take down the radio link until the update procedure is completed at both ends of the radio link.

To update the Aeras WaveLink software, perform the following procedures at both ends of the radio link. Note that when you are updating ethernet models of the Aeras WaveLink, you should update the far-end Aeras WaveLink first, and the near-end Aeras WaveLink second to ensure that you do not lose radio communications with the far end.

1. Connect your web browser to the Aeras WaveLink:
   - For an ethernet Aeras WaveLink, make sure that your web browser-equipped Craft PC or desktop PC is connected to the same network as the Aeras WaveLink.
   - For a DS-3 or E3 Aeras WaveLink, connect your web browser-equipped Craft PC or desktop PC to the Aeras WaveLink as described in Section 4-2.1.
2. Log into the Aeras WaveLink website by opening location `http://<IP Address>/` in your web browser.
   - For an ethernet Aeras WaveLink, make sure that you log into the Aeras WaveLink at the far end of the radio link and update it first.
   - For a DS-3 or E3 Aeras WaveLink, your web browser-equipped Craft PC or desktop PC is directly connected to the Aeras WaveLink.
3. Navigate to the `Update Software` web page. A sample `Update Software` page is shown in Figure 5-1.

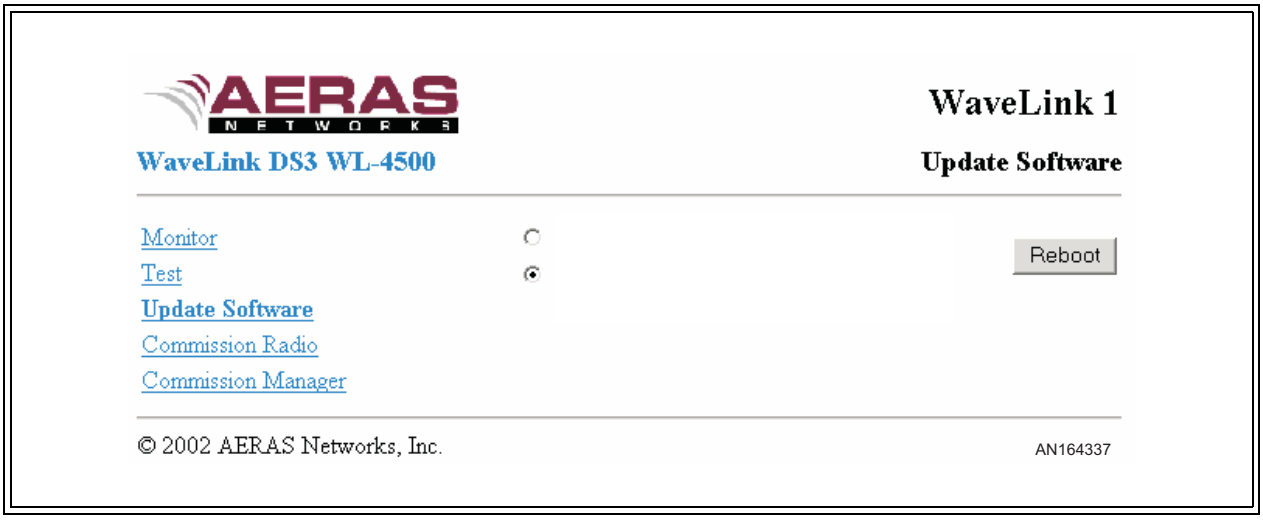

Figure 5-1 Typical DS-3 Update Software Web Page

4. Using the radio buttons, select the software version you are to overwrite. Usually, this will be the lower-numbered version, or the version you are not currently using.
5. Contact Customer Support for instructions to FTP the software files to the Aeras WaveLink.
6. When the software has been FTPd to the Aeras WaveLink, return to the **`Update Software`** page.

   This process has deleted the selected software load with the new software load. Do not activate the new software load until both ends have received their new software loads.
7. Repeat Step 1 through Step 6 of this update process for the near-end Aeras WaveLink, and then continue with Step 8.
8. Now that both ends of the radio link have the new software load in memory, do the following to activate the new software load as follows.
9. Log into the far-end Aeras WaveLink and navigate to the **`Update Software`** page.
10. Select the new software load and click **`Reboot`**.

    The far-end Aeras WaveLink reboots and activates the new software load.
11. Log into the near-end Aeras WaveLink and navigate to the **`Update Software`** page.
12. Select the new software load and click **`Reboot`**.

    The near-end Aeras WaveLink reboots and activates the new software load.

    Should the radio link not be restored, make sure that both ends of the radio link are using the same software load.

Both of the Aeras WaveLinks on the radio link now are using the new software load and the previous configuration parameters, and as soon as they resynchronize their signals, the radio link is restored.

Six

Monitoring and Trend Analysis

Each Aeras WaveLink and radio link can be monitored through either the built-in Web server or SNMP agent interfaces.

6-1 Built-In Web Server Interface

A subset of the SNMP-accessible statistics is available through the Web server interface connected to a web browser over an Ethernet link. These statistics can be read by logging in to display the Monitor page, as shown in Appendix 3. Statistics can be repeatedly sampled using the Web browser reload or refresh feature.

The easiest indicator to monitor is the RSSI. Keep a record of the RSSI levels measured in Step 76 in Chapter Four. The Step 76 value is the RSSI level with Automatic Tx Power Control disabled (transmitting at maximum power), with Automatic Tx Power Control disabled.

A properly designed radio link with a 20 dB or greater fade margin should indicate receive levels in the area of -60 dBm at Aeras WaveLink sites. The accuracy of the indicated RSSI is approximately ±5 dB over a range of -90 dBm to -65 dBm.

6-2 SNMP Network and Element Management Systems

6-2.1 SNMP Details

All monitored statistics are available through SNMP queries. In addition to MIB-II variables, product-specific variables are available through the Aeras WaveLink enterprise MIB, which can be retrieved via FTP from F:/PUB/wavelink.mib (text file) in the Aeras WaveLink file system. Most commercial SNMP NMSs and EMSs have the ability to sample variables over time and display trends and raise alarms based on defined thresholds. In addition, applicable SNMP traps are supported and can be used to raise alarms on the NMS and/or EMS.

Any standard SNMP NMS or EMS can be used to monitor and control the Aeras WaveLink network and individual Aeras WaveLink radios.

The Aeras WaveLink has an enterprise MIB provided in standard ASCII format, which can be accessed for printing. When a software upgrade is performed, the self-extracting file places all directories and associated files necessary for the upgrade in a location specified by the operator at the time the self-extracting file is executed. One of the directories created is /PUB, which contains the printable enterprise ASCII text MIB file named wavelink.mib.

The enterprise MIB file is also stored in FLASH memory on the Aeras WaveLink in F:/PUB. A copy of the wavelink.mib file can be extracted from the Aeras WaveLink using an ASCII FTP file transfer.

6-2.2 Monitoring Error Messages and Traps

The Aeras WaveLink supports the generic SNMP traps and Aeras WaveLink enterprise traps. When an error (or informational) message is generated by the router, an SNMP trap is issued (when enabled), and the message is also written to an error log maintained within the router. The router's error log table holds the last 256 error messages and can be queried through SNMP reads. Refer to Appendix 5 for a detailed list of router-specific messages and traps.

The error log is read ten entries at a time. To do an SNMP read of the first (oldest) ten entries, perform the following SNMP operations:

1. Set elLogEntryNumber to start at the oldest entry 0.
2. Set elScrollControl to forward to read log in FORWARD direction – oldest entries first.
3. Get elTrapTable retrieves the most recent ten entries – repeat for next ten entries.

The following SNMP operations also can be used to access or modify information in the error log:

- To read the log in the BACKWARDS direction, set elScrollControl to backward.
- To clear the log, set elScrollControl to clearLog.
- To set the threshold for the lowest severity of messages to be generated, set elLevelDisable to 1 (normal) through 5 (critical). Setting the threshold properly avoids filling the log with informational or nonserious errors.
- To set the current date and time (default after reboot is 12 Midnight, January 1, 1970), set the appropriate fields of elTimeDate, or use the Control page on the UI. The timestamps included in error messages are generated relative to this date and time.

Seven

Troubleshooting the Aeras WaveLink

This chapter explains how to troubleshoot a Aeras WaveLink and associated radio link using the LEDs, a local or remote Web browser, or any other method.

This chapter includes:

- Section 7-1, Troubleshooting Tables
- Section 7-2, Using the Aeras WaveLink LEDs
- Section 7-3, Using RSSI
- Section 7-4, Using a Web Browser

7-1 Troubleshooting Tables

This section includes a troubleshooting table for different symptoms:

Table 7-1 Symptoms and Probable Causes

Symptoms	Probable Cause
No response from Aeras WaveLink, No payload data being transmitted	Power loss to Aeras WaveLink, New obstructions (leafy trees and/or buildings, for example), Antenna no longer in alignment, Damaged cables, Defective transmission equipment
Reduced RSSI, High BER, Reduced payload data transmission rate	New obstructions (leafy trees and/or buildings, for example), Antenna no longer in alignment, Damaged or degraded cables, New interferers (multipath reflections from flooded fields or new buildings, or new consumer applications, for example)
Intermittent transmissions	ATPC unable to block a frequency hopping transmitter or other intermittent interferer -- disable ATPC

7-2 Using the Aeras WaveLink LEDs

Aeras WaveLink operation can be monitored using the LEDs. The LEDs show general radio link status at a glance. See Figure 1-3 for LED locations on the Aeras WaveLink radio. The LEDs operate in the following modes.

Table 7-2 LEDs and Alarm Indication Modes

LED	Normal State	Alarm State
PWR/LCL ALM	ON -- Power on and no alarm	Flashing -- Local alarm OFF -- Power off
RF LINK	ON -- Receive RF OK	OFF -- Receive radio link alarm
DATA	ON -- DS-3 or E3 input OK	OFF -- DS-3 or E3 input LOS
ENET 2	ON -- Ethernet input OK Flashing -- Receiving Ethernet data	OFF -- No Ethernet input
ENET 1	ON -- Ethernet input OK Flashing -- Receiving Ethernet data	OFF -- No Ethernet input

7-3 Using RSSI

When you connect a voltmeter with BNC adapter to the Aeras WaveLink RSSI port, you can measure an indication of the received RF signal level. When the Receive Level falls below -70 dBm, see Table 7-1 for a list of possible causes.

NOTE Make sure you replace the Aeras WaveLink RSSI connector cover when done troubleshooting the radio link.

7-4 Using a Web Browser

As described in Appendix 3, most of the Aeras WaveLink configuring, operating, and maintenance are performed using the Aeras WaveLink Web pages. Use the error indications in the web server interface and Table 7-1 to troubleshoot alarm indications.

Appendix 1

Interface Cable Pinouts

A1-1 DS-3 and E3 Cable

Table A1-1 DS-3 and E3 Cable (100587-00X)

Aeras WaveLink IN/OUT TNC Connectors		Wire Color	DS-3/E3 Equipment BNC Port	
Pin	**Function**		**Function**	**Pin**
1	RX	--	TX	1
Shield	GND	Foil	GND	Shield
2	TX	--	RX	2
Shield	GND	Foil	GND	Shield

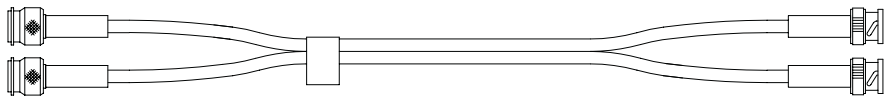

A1-2 Ethernet Data Cable

Table A1-2 10/100 Ethernet Data Cable (100652-00X)

Aeras WaveLink ETHERNET 1/2 Connectors		Wire Color	Ethernet Equipment RJ-45 Port	
Pin	**Function**		**Function**	**Pin**
1	RX+	White/Orange	TX+	1
2	RX-	Orange	TX-	2
3	TX+	White/Green	RX+	3
4	TX-	Green	RX-	6

Table A1-2 10/100 Ethernet Data Cable (100652-00X)

Aeras WaveLink ETHERNET 1/2 Connectors		Wire Color	Ethernet Equipment RJ-45 Port	
Pin	**Function**		**Function**	**Pin**

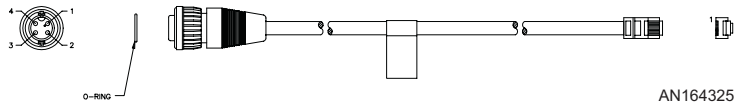

A1-3 DC Power Cable

Table A1-3 DC Power Cable (100653-00X)

To Aeras WaveLink POWER (4-pin Circular)		Wire Color	To DC Power Supply	
Pin	**Function**		**Function**	**Wire**
1	-V in	White	-V out	White
2	--	--	RS-232 TX	--
3	--	--	RS-232 RX	--
4	+V in	Red	RS-232 GND	Red

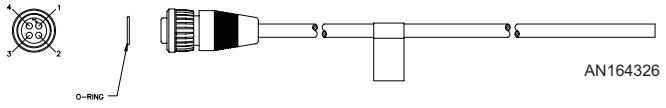

A1-4 Ethernet Crossover Cable

Table A1-4 10/100 Ethernet Crossover Cable (100655-001)

Aeras WaveLink ETHERNET 1/2 Connectors		Wire Color	Aeras WaveLink ETHERNET 1/2 Connectors	
Pin	**Function**		**Function**	**Pin**
1	RX+	White/Orange	TX+	3
2	RX-	Orange	TX-	4
3	TX+	White/Green	RX+	1
4	TX-	Green	RX-	2

Table A1-4 10/100 Ethernet Crossover Cable (100655-001)

Aeras WaveLink ETHERNET 1/2 Connectors		Wire Color	Aeras WaveLink ETHERNET 1/2 Connectors	
Pin	**Function**		**Function**	**Pin**

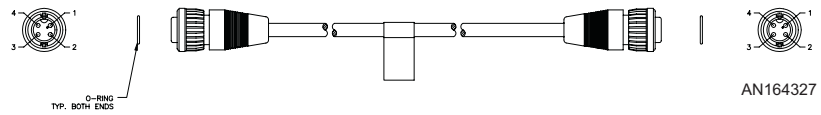

A1-5 External Antenna Cable

Table A1-5 Antenna Cable (AC100008)

Aeras WaveLink N-Type Connector		Wire Color	Antenna N-Type Connector	
Pin	**Function**		**Function**	**Pin**
1	TX/RX	--	TX/RX	1
Shield	GND	--	GND	Shield

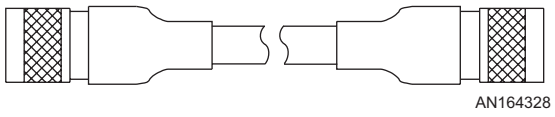

A1-6 RS-232 Craft Cable

Table A1-6 RS-232 CLI Craft PC Cable (100586-001)

To Aeras WaveLink TEST (4-pin Circular)		Wire Color	To Craft PC Serial DB-9 Port	
Pin	**Function**		**Function**	**Pin**
1	N/C	--	N/C	--
2	RS-232 RX	Red	RS-232 TX	3
3	RS-232 TX	Black	RS-232 RX	2
4	RS-232 GND	Yellow	RS-232 GND	5

Table A1-6 RS-232 CLI Craft PC Cable (100586-001)

To Aeras WaveLink TEST (4-pin Circular)		Wire Color	To Craft PC Serial DB-9 Port	
Pin	**Function**		**Function**	**Pin**

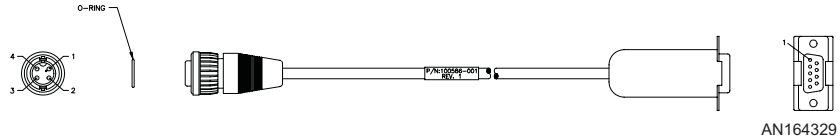

A1-7 Aeras WaveStream Switch Cable

Table A1-7 Aeras WaveStream Switch DS-3 Cable (100588-003)

Aeras WaveLink IN/OUT TNC Connectors		Wire Color	Aeras WaveStream Switch DS-3 TNC Port	
Pin	**Function**		**Function**	**Pin**
1	RX	--	TX	1
Shield	GND	Foil	GND	Shield
2	TX	--	RX	2
Shield	GND	Foil	GND	Shield

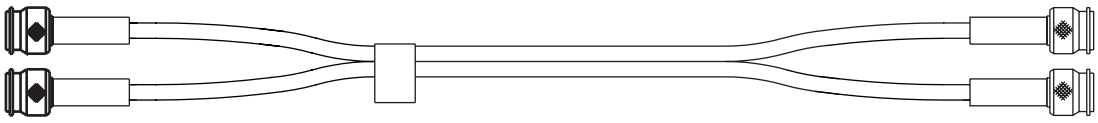

Appendix 2

Technical Specifications

A2-1 Aeras WaveLink Radio

Table A2-1 Aeras WaveLink-DSX DS-3 or Ethernet Version (5.3 GHz)

General	
Frequency Range	5.25-5.35 GHz
Compliance (USA)	FCC Rules Part 15.407, U-NII
Capacity	Full-duplex DS-3, per Bellcore GR-499-CORE, or 45 Mbps Ethernet, per IEEE 802.3
Emission Bandwidth	26 dB at 13.9 MHz
Channel Center Frequencies • Channel 1 (Tx Low/Rx High) • Channel 1 (Tx High/Rx Low) • Channel 2 (Tx Low/Rx High) • Channel 2 (Tx High/Rx Low)	 Transmit--5.262 GHz/Receive--5.322 GHz Transmit--5.322 GHz/Receive--5.262 GHz Transmit--5.278 GHz/Receive--5.338 GHz Transmit--5.338 GHz/Receive--5.278 GHz
Modulation Type	16 QAM
Transmitter	
Maximum RMS Power Output	+10.0 dBm (-1.0 dBm for FCC version)
Power Output Stability	+/- 2 dB
Frequency Stability	+/- 5 ppm
Transmit Duty Cycle	100%
Emissions Mask & Spurious and Harmonic Output	Per FCC CFR 47 Part 15.407
Channel Frequency Selection	Software-controlled
Automatic Tx Power Control (ATPC)	Maintains a constant Carrier-to-Noise Ratio at both ends of a link, operator enabled ON or OFF
Transmitter Attenuation Range	0-30.0 dB in 1 dB steps, and Mute 40 dB, operator controlled

Table A2-1 Aeras WaveLink-DSX DS-3 or Ethernet Version (5.3 GHz) (continued)

Receiver	
Type	Double Heterodyne
Error Correction	FEC Reed Solomon Decoding
Sensitivity at 10^{-6} BER	-78 dBm state guaranteed
Typical Unfaded BER	10^{-10}
Frequency Stability	+/- 5 ppm
Channel Frequency Selection	Software-controlled
Maximum Receive Level without Receiver Degradation	-35 dBm
Maximum Receive Level without Receiver Damage	-30 dBm
DS-3 Interface	
Type	Full-duplex DS-3, per Bellcore GR-499-CORE
Line Rate	44.736 Mbps
Line Code	B3ZS
Tx and Rx Electrical Interfaces	75 Ohm unbalanced
Tx and Rx Physical Connectors	Female TNC coaxial with grounded outer conductor
Ethernet Interfaces	
Number	Two, with independent transmit and receive pair sensing
Type	Full-duplex 10/100 Base-T per IEEE 802.3
Line Rate	45 Mbps
Max Distance between CPE and Aeras WaveLink	100 m (328 ft.)
Electrical Interfaces	100 Ohm UTP
Physical Connectors	Female four-pin Circular
External Antenna to Aeras WaveLink Antenna Port (Optional)	
Connector Type	50 Ohm Coaxial N-Type Female
Antenna Port Return Loss	>=12 dB
Other Interfaces	
Craft Port	Male four-pin Circular, RS-232 asynchronous data port (TXD, RXD, GND)

Table A2-1 Aeras WaveLink-DSX DS-3 or Ethernet Version (5.3 GHz) (continued)

RSSI	Female BNC, DC voltage level proportionate to Received Signal Strength
Power Requirements	
DC Source	+/- 21 to +/- 60 VDC
Power Consumption	30 watts typical
Undervoltage Protection Circuit	> +/- 18 VDC to power up the Aeras WaveLink
Physical Connector	Male four-pin Circular
Environmental	
Ambient Temperature Range • Operational • Storage	 -33 to +60°C (-27 to +140°F) -40 to +85°C (-40 to +185°F)
Relative Humidity • Operational • Storage	 100%, all weather protection 95%, noncondensing
Altitude • Operational • Storage	 15,000 ft. AMSL (4,500m) 50,000 ft. AMSL (15,000m)
Mechanical	
Height (HxWxD) • With External Antenna • With Integral Connector	 30 x 30 x 10 cm (12 x 12 x 4 in.) 30 x 30 x 10.6 cm (12 x 12 x 4.25 in.)
Weight • With Integral Antenna • With External Antenna Connector	 (TBD) kg (lb.); Shipping Weight: kg (lb.) (TBD) kg (lb.); Shipping Weight: kg (lb.)

Table A2-2 Aeras WaveLink-DSX DS-3 or Ethernet Version (5.8 GHz)

General	
Frequency Range	5.725-5.825 GHz
Compliance	Complies with FCC Ruling Part 15.247
Capacity	Full-duplex DS-3, per Bellcore GR-499-CORE, or 45 Mbps Ethernet, per IEEE 802.3
Emission Bandwidth	13.9 MHz at 26 dB
Channel Center Frequencies • Channel 1 (Tx Low/Rx High) • Channel 1 (Tx High/Rx Low) • Channel 2 (Tx Low/Rx High) • Channel 2 (Tx High/Rx Low)	 Transmit--5.737 GHz/Receive--5.797 GHz Transmit--5.797 GHz/Receive--5.737 GHz Transmit--5.753 GHz/Receive--5.813 GHz Transmit--5.813 GHz/Receive--5.753 GHz
Modulation Type	16 QAM
Factory-Supplied Coaxial Cable	2 m (6.6 ft.) N-Type Male to N-Type Male
Transmitter	
Maximum RMS Power Output	+16.0 dBm
Power Output Stability	+/- 2 dB
Frequency Stability	+/- 5 ppm
Transmit Duty Cycle	100%
Emissions Mask & Spurious and Harmonic Output	Per FCC CFR 47 Part 15.407b3
Channel Frequency Selection	Software-controlled
Automatic Tx Power Control (ATPC)	Maintains a constant Carrier-to-Noise Ratio at both ends of a link, operator enabled ON or OFF
Transmitter Attenuation Range	0-30.0 dB in 1 dB steps, and Mute 40 dB, operator controlled
Receiver	
Type	Double Heterodyne
Error Correction	FEC Reed Solomon Decoding
Sensitivity at 10^{-6} BER	-78 dBm state guaranteed
Typical Unfaded BER	10^{-10}
Frequency Stability	+/- 5 ppm
Channel Frequency Selection	Software-controlled

Table A2-2 Aeras WaveLink-DSX DS-3 or Ethernet Version (5.8 GHz) (continued)

Maximum Receive Level without Receiver Degradation	-35 dBm
Maximum Receive Level without Receiver Damage	-30 dBm
DS-3 Interface	
Type	Full-duplex DS-3, per Bellcore GR-499-CORE
Line Rate	44.736 Mbps
Line Code	B3ZS
Tx and Rx Electrical Interfaces	75 Ohm unbalanced
Tx and Rx Physical Connectors	Female TNC coaxial with grounded outer conductor
Ethernet Interfaces	
Number	Two, with independent transmit and receive pair sensing
Type	Full-duplex 10/100 Base-T per IEEE 802.3
Line Rate	45 Mbps
Max Distance between CPE and Aeras WaveLink	100 m (328 ft.)
Electrical Interfaces	100 Ohm UTP
Physical Connectors	Female four-pin Circular
External Antenna to Aeras WaveLink Antenna Port (Optional)	
Connector Type	50 Ohm Coaxial N-Type Female
Antenna Port Return Loss	>=12 dB
Other Interfaces	
Craft Port	Male four-pin Circular, RS-232 asynchronous data port (TXD, RXD, GND)
RSSI	Female BNC, DC voltage level proportionate to Received Signal Strength
Power Requirements	
DC Source	+/- 21 to +/- 60 VDC
Power Consumption	30 watts typical
Undervoltage Protection Circuit	> +/- 18 VDC to power up the Aeras WaveLink
Physical Connector	Male four-pin Circular
Environmental	

Table A2-2 Aeras WaveLink-DSX DS-3 or Ethernet Version (5.8 GHz) (continued)

Ambient Temperature Range • Operational • Storage	 -33 to +60°C (-27 to +140°F) -40 to +85°C (-40 to +185°F)
Relative Humidity • Operational • Storage	 100%, all weather protection 95%, noncondensing
Altitude • Operational • Storage	 15,000 ft. AMSL (4,500m) 50,000 ft. AMSL (15,000m)
Mechanical	
Height (HxWxD) • With External Antenna • With Integral Connector	 30 x 30 x 10 cm (12 x 12 x 4 in.) 30 x 30 x 10.6 cm (12 x 12 x 4.25 in.)
Weight • With Integral Antenna • With External Antenna Connector	 (TBD) kg (lb.); Shipping Weight: kg (lb.) (TBD) kg (lb.); Shipping Weight: kg (lb.)

Table A2-3 Aeras WaveLink-ITU E3 or Ethernet Version (5.3 GHz)

General	
Operating Range	5.25-5.35 GHz
Compliance	Complies with ETSI I-ETS 300 440 and ERC REC 70-03
Capacity	Full-duplex E3, per ITU G.703, or 35 Mbps Ethernet, per IEEE 802.3
Emission Bandwidth	13.9 MHz at 26 dB
Channel Center Frequencies • Channel 1 (Tx Low/Rx High) • Channel 1 (Tx High/Rx Low) • Channel 2 (Tx Low/Rx High) • Channel 2 (Tx High/Rx Low)	 Transmit--5.262 GHz/Receive--5.322 GHz Transmit--5.322 GHz/Receive--5.262 GHz Transmit--5.278 GHz/Receive--5.338 GHz Transmit--5.338 GHz/Receive--5.278 GHz
Modulation Type	16 QAM
Transmitter	
Maximum RMS Power Output	+10.0 dBm
Power Output Stability	+/- 2 dB
Frequency Stability	+/- 5 ppm
Transmit Duty Cycle	100%
Channel Frequency Selection	Software-controlled
Automatic Tx Power Control (ATPC)	Maintains a constant Carrier-to-Noise Ratio at both ends of a link, operator enabled ON or OFF
Transmitter Attenuation Range	0-30.0 dB/Mute 50 dB, operator controlled
Receiver	
Type	Double Heterodyne
Error Correction	FEC Reed Solomon Decoding
Sensitivity at 10^{-6} BER	-79 dBm state guaranteed
Typical Unfaded BER	10^{-10}
Frequency Stability	+/- 5 ppm
Channel Frequency Selection	Software-controlled
Maximum Receive Level without Receiver Degradation	-35 dBm
Maximum Receive Level without Receiver Damage	-30 dBm

Table A2-3 Aeras WaveLink-ITU E3 or Ethernet Version (5.3 GHz) (continued)

E3 Interface	
Type	Full-duplex E3, per ITU G.703
Line Rate	34.368 Mbps
Line Code	HDB3
Tx and Rx Electrical Interfaces	75 Ohm unbalanced
Tx and Rx Physical Connectors	Female TNC coaxial with grounded outer conductor
Ethernet Interfaces	
Number	Two, with independent transmit and receive pair sensing
Type	Full-duplex 10/100 Base-T per IEEE 802.3
Line Rate	35 Mbps
Max Distance between CPE and Aeras WaveLink	100 m (328 ft.)
Electrical Interfaces	100 Ohm UTP
Physical Connectors	Female four-pin Circular
External Antenna to Aeras WaveLink Antenna Port (Optional)	
Connector Type	50 Ohm Coaxial N-Type Female
Antenna Port Return Loss	>=12 dB
Other Interfaces	
Craft Port	Male four-pin Circular, RS-232 asynchronous data port (TXD, RXD, GND)
RSSI	Female BNC, DC voltage level proportionate to Received Signal Strength
Power Requirements	
DC Source	+/- 21 to +/- 60 VDC
Power Consumption	30 watts typical
Undervoltage Protection Circuit	> +/- 18 VDC to power up the Aeras WaveLink
Physical Connector	Male four-pin Circular
Environmental	
Ambient Temperature Range • Operational • Storage	 -33 to +60°C (-27 to +140°F) -40 to +85°C (-40 to +185°F)

Table A2-3 Aeras WaveLink-ITU E3 or Ethernet Version (5.3 GHz) (continued)

Relative Humidity • Operational • Storage	 100%, all weather protection 95%, noncondensing
Altitude • Operational • Storage	 15,000 ft. AMSL (4,500m) 50,000 ft. AMSL (15,000m)
Mechanical	
Height (HxWxD) • With External Antenna • With Integral Connector	 30 x 30 x 10 cm (12 x 12 x 4 in.) 30 x 30 x 10.6 cm (12 x 12 x 4.25 in.)
Weight • With Integral Antenna • With External Antenna Connector	 (TBD) kg (lb.); Shipping Weight: kg (lb.) (TBD) kg (lb.); Shipping Weight: kg (lb.)

Table A2-4 Aeras WaveLink-ITU E3 or Ethernet Version (5.8 GHz)

General	
Operating Range	5.725-5.825 GHz
Compliance	Complies with ETSI I-ETS 300 440 and ERC REC 70-03
Capacity	Full-duplex E3, per ITU G.703, or 35 Mbps Ethernet, per IEEE 802.3
Emission Bandwidth	13.9 MHz at 26 dB
Channel Center Frequencies • Channel 1 (Tx Low/Rx High) • Channel 1 (Tx High/Rx Low) • Channel 2 (Tx Low/Rx High) • Channel 2 (Tx High/Rx Low)	 Transmit--5.737 GHz/Receive--5.797 GHz Transmit--5.797 GHz/Receive--5.737 GHz Transmit--5.753 GHz/Receive--5.813 GHz Transmit--5.813 GHz/Receive--5.753 GHz
Modulation Type	16 QAM
Transmitter	
Maximum RMS Power Output	+16.0 dBm
Power Output Stability	+/- 2 dB
Frequency Stability	+/- 5 ppm
Transmit Duty Cycle	100%
Channel Frequency Selection	Software-controlled
Automatic Tx Power Control (ATPC)	Maintains a constant Carrier-to-Noise Ratio at both ends of a link, operator enabled ON or OFF
Transmitter Attenuation Range	0-30.0 dB/Mute 50 dB, operator controlled
Receiver	
Type	Double Heterodyne
Error Correction	FEC Reed Solomon Decoding
Sensitivity at 10^{-6} BER	-79 dBm state guaranteed
Typical Unfaded BER	10^{-10}
Frequency Stability	+/- 5 ppm
Channel Frequency Selection	Software-controlled
Maximum Receive Level without Receiver Degradation	-35 dBm
Maximum Receive Level without Receiver Damage	-30 dBm

Table A2-4 Aeras WaveLink-ITU E3 or Ethernet Version (5.8 GHz) (continued)

E3 Interface	
Type	Full-duplex E3, per ITU G.703
Line Rate	34.368 Mbps
Line Code	HDB3
Tx and Rx Electrical Interfaces	75 Ohm unbalanced
Tx and Rx Physical Connectors	Female TNC coaxial with grounded outer conductor
Ethernet Interfaces	
Number	Two, with independent transmit and receive pair sensing
Type	Full-duplex 10/100 Base-T per IEEE 802.3
Line Rate	35 Mbps
Max Distance between CPE and Aeras WaveLink	100 m (328 ft.)
Electrical Interfaces	100 Ohm UTP
Physical Connectors	Female four-pin Circular
External Antenna to Aeras WaveLink Antenna Port (Optional)	
Connector Type	50 Ohm Coaxial N-Type Female
Antenna Port Return Loss	>=12 dB
Other Interfaces	
Craft Port	Male four-pin Circular, RS-232 asynchronous data port (TXD, RXD, GND)
RSSI	Female BNC, DC voltage level proportionate to Received Signal Strength
Power Requirements	
DC Source	+/- 21 to +/- 60 VDC
Power Consumption	30 watts typical
Undervoltage Protection Circuit	> +/- 18 VDC to power up the Aeras WaveLink
Physical Connector	Male four-pin Circular
Environmental	
Ambient Temperature Range • Operational • Storage	 -33 to +60°C (-27 to +140°F) -40 to +85°C (-40 to +185°F)

Table A2-4 Aeras WaveLink-ITU E3 or Ethernet Version (5.8 GHz) (continued)

Relative Humidity • Operational • Storage	 100%, all weather protection 95%, noncondensing
Altitude • Operational • Storage	 15,000 ft. AMSL (4,500m) 50,000 ft. AMSL (15,000m)
Mechanical	
Height (HxWxD) • With External Antenna • With Integral Connector	 30 x 30 x 10 cm (12 x 12 x 4 in.) 30 x 30 x 10.6 cm (12 x 12 x 4.25 in.)
Weight • With Integral Antenna • With External Antenna Connector	 (TBD) kg (lb.); Shipping Weight: kg (lb.) (TBD) kg (lb.); Shipping Weight: kg (lb.)

A2-2 Factory-Supplied Antennas

This chapter describes specifications for the integral Aeras WaveLink antenna, and the three factory-supplied antennas. Specifications for customer-supplied antennas are to be supplied by the antenna manufacturer.

Table A2-5 Integral Flat Panel Antenna

Size	30 x 30 x 1.9 cm (12 x 12 x 0.75 in.)
Mounting	Permanently attached to the Aeras WaveLink radio; Gasketed to prevent moisture intrusion
Polarization	Horizontal or vertical, depending on Aeras WaveLink mounting position
Forward Gain	21 dBi
Front/Back Ratio	40 dB
Beam Width	12°
Elevation Adjustment	± 15°
Azimuth Adjustment	360°
Mounting Bracket Pole Capacity • Single Aeras WaveLink • Dual Aeras WaveLink	 4.43 - 11.4 cm (1.75 - 4.5 in.) 4.43 - 11.4 cm (1.75 - 4.5 in.)

Table A2-6 61 cm (2 ft.) Parabolic Antenna (Note)

Size	61 cm (2 ft.) round parabolic with integral radome
Mounting	Independent mounting
Polarization	Horizontal or vertical, depending on mounting position
Forward Gain	28.1 dBi
Front/Back Ratio	38 dB
Beam Width	6°
Elevation Adjustment	± 15°
Azimuth Adjustment	360°
Mounting Bracket Pole Capacity	4.43 - 11.4 cm (1.75 - 4.5 in.)
Connector to Aeras WaveLink	Coaxial 50 Ohm Female N-Type
Factory-Supplied Coaxial Cable to Aeras WaveLink	2 m (6.6 ft.) N-Type Male to N-Type Male
Note: This antenna is not FCC certified for use with the 5.3 GHz Aeras WaveLink.	

Table A2-7 122 cm (4 ft.) Parabolic Antenna (Note)

Size	122 cm (4 ft.) round parabolic with integral radome
Mounting	Independent mounting
Polarization	Horizontal or vertical, depending on mounting position
Forward Gain	34 dBi
Front/Back Ratio	46 dB
Beam Width	(TBD) °
Elevation Adjustment	± 15°
Azimuth Adjustment	360°
Mounting Bracket Pole Capacity	4.43 - 11.4 cm (1.75 - 4.5 in.)
Connector to Aeras WaveLink	Coaxial 50 Ohm Female N-Type
Factory-Supplied Coaxial Cable to Aeras WaveLink	2 m (6.6 ft.) N-Type Male to N-Type Male
Note: This antenna is not FCC certified for use with the 5.3 GHz Aeras WaveLink.	

Appendix 3

Using the Web-Based GUI User Interface

The Aeras WaveLink includes its own HTML-based installation, operation and test Web pages, which can be accessed locally using a Web browser on a Craft PC, or remotely using any Web browser on the same network as the Aeras WaveLink.

The rest of this Appendix includes information on:

- Section A3-1, Web Browser Requirements
- Section A3-2, Connecting A Web Browser
- Section A3-3, Accessing the Aeras WaveLink Web Pages
- Section A3-4, Aeras WaveLink Web Pages

A3-1 Web Browser Requirements

The Web browser used to install, operate, and maintain the Aeras WaveLink must have an HTML-enabled interface.

A3-2 Connecting A Web Browser

You must connect your Web browser to the Aeras WaveLink; either locally using a Craft PC, or remotely using any Web browser on the same Ethernet network as the Aeras WaveLink. The web browser platform must have an Ethernet adapter for connecting to the Aeras WaveLink directly, or to the Aeras WaveLink though other Ethernet equipment.

A3-3 Accessing the Aeras WaveLink Web Pages

Once your Web browser is connected to the Aeras WaveLink as described in Section A3-2, you can access and move through the configuration and maintenance pages as you would any other Web site. The rest of this paragraph will describe how to access the Aeras WaveLink Web pages.

A3-4 Aeras WaveLink Web Pages

The following figures show the Aeras WaveLink Web pages, and Chapter Four through Chapter Seven describe how to use the Aeras WaveLink Web pages to configure, install, and maintain the Aeras WaveLink.

A3-4.1 All Versions

- To access the Aeras WaveLink built-in website, connect the Aeras WaveLink to your Craft PC using the ethernet cable, open your Craft PC web browser, and open ethernet address http://10.0.0.2/ (transmit low models) or http://10.0.0.3/ (transmit high models) in the web browser.

  When the web browser ethernet address has been changed, use the replacement ethernet address instead of http://10.0.0.x/.

When the Aeras WaveLink is configured for a password, enter it in the window shown in Figure A3-1, and the web browser takes you to Figure A3-2 (DS-3 models) or Figure A3-2 (E3 models). When the Aeras WaveLink is not configured for a password, the web browser takes you directly to Figure A3-2.

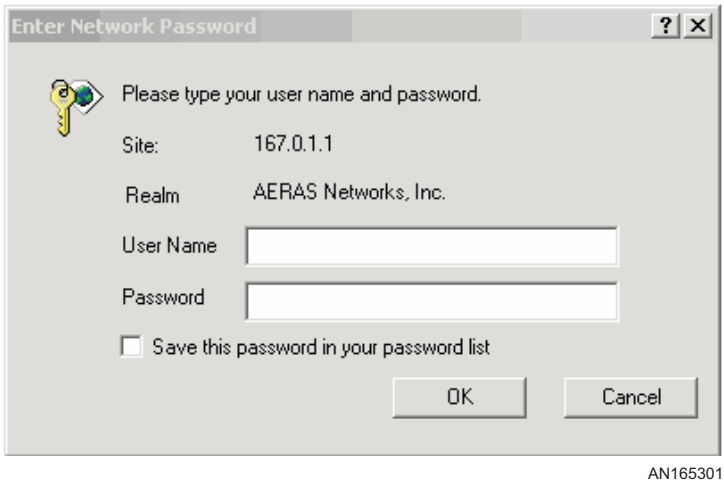

Figure A3-1 Aeras WaveLink Login Window (all models)

A3-4.2 DS-3 and E3 Versions

AERAS NETWORKS

WaveLink DS3 WL-4500

WaveLink 1

Monitor

Monitor
Test
Update Software
Commission Radio
Commission Manager

RSSI		-81 dBm	
BER			
Tx Power		-9 dBm	
		Radio Link Status	
RSSI		**Alarm**	
Receiver Overload		Normal	
BER		**Alarm**	
Demodulator Lock		**Alarm**	
		Hardware Status	
Tx Power		Normal	
Tx Synthesizer Lock		Normal	
Rx Synthesizer Lock		Normal	
		DS-3 Input Status	
DS-3 Input		**Alarm**	
Test Mode		Normal	
Radio Channel		1: Tx 5.737 GHz, Rx 5.797 GHz	
Tx Attenuation		Disable	
Maximum Tx Power		-9 dBm	
Automatic Tx Power Control		Enable	
Remote Radio IP Address		192.168.15.134	
RSSI Alarm Level		-80 dBm	
Alarm on Loss of DS-3 Input		Enable	
IP Address		10.0.1.1	
Subnet Mask		255.255.192.0	
Default Gateway		10.0.0.1	
	Model	**Revision**	**Serial Number**
Unit	100748-102	1	0003
PCB	100471-500	2b	006445
Software		CXDS300_00.0E09	

© 2002 AERAS Networks, Inc.

AN164331

Figure A3-2 Aeras WaveLink DS-3 Monitor Web Page

Note that the Monitor page has a hypertext link to the Aeras WaveLink on the far end of the radio link for faster troubleshooting and easy movement between the two Aeras WaveLinks.

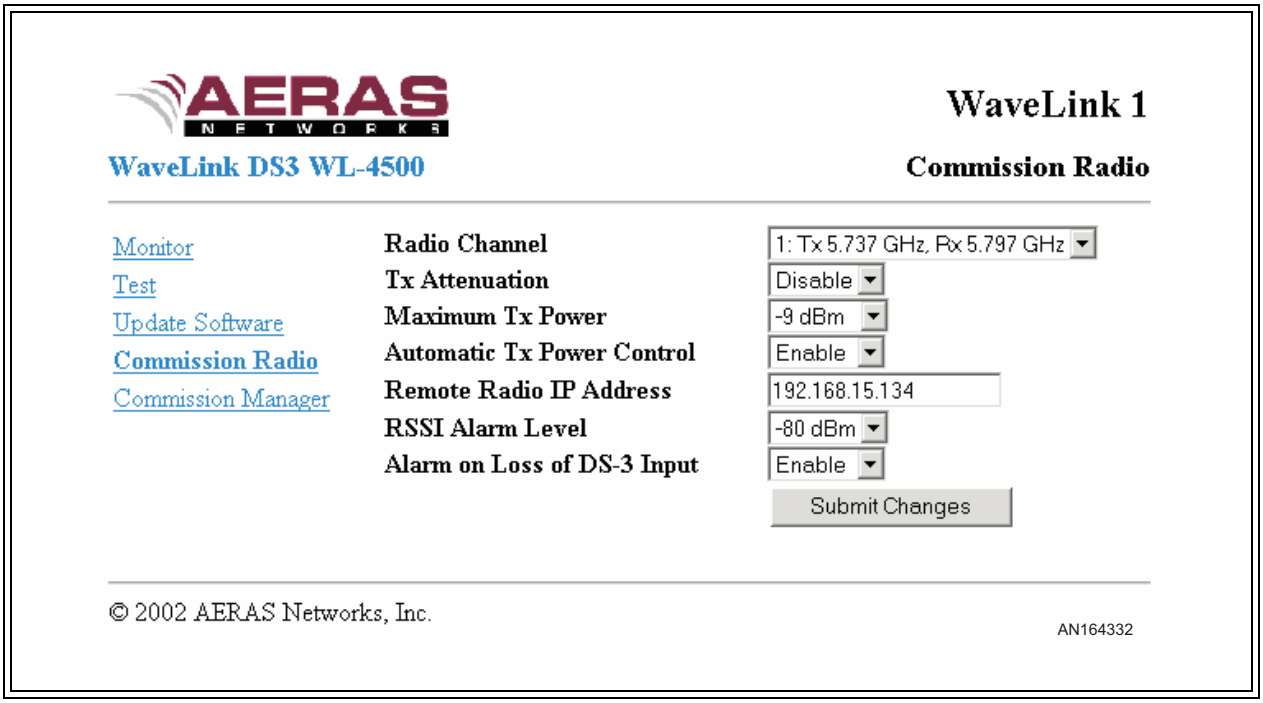

Figure A3-3 Aeras WaveLink DS-3 Commission Radio Web Page

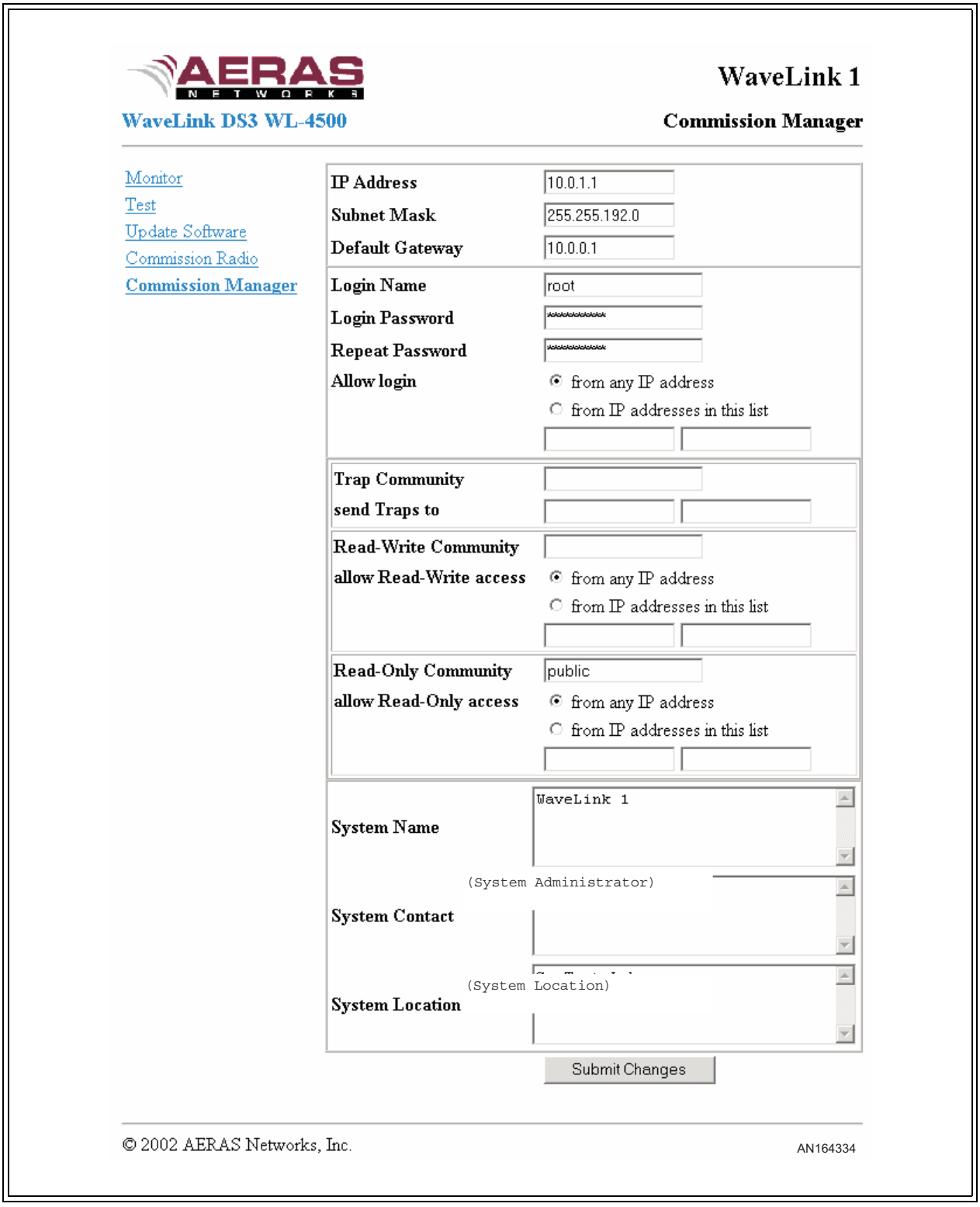

Figure A3-4 Aeras WaveLink DS-3 Commission Manager Web Page

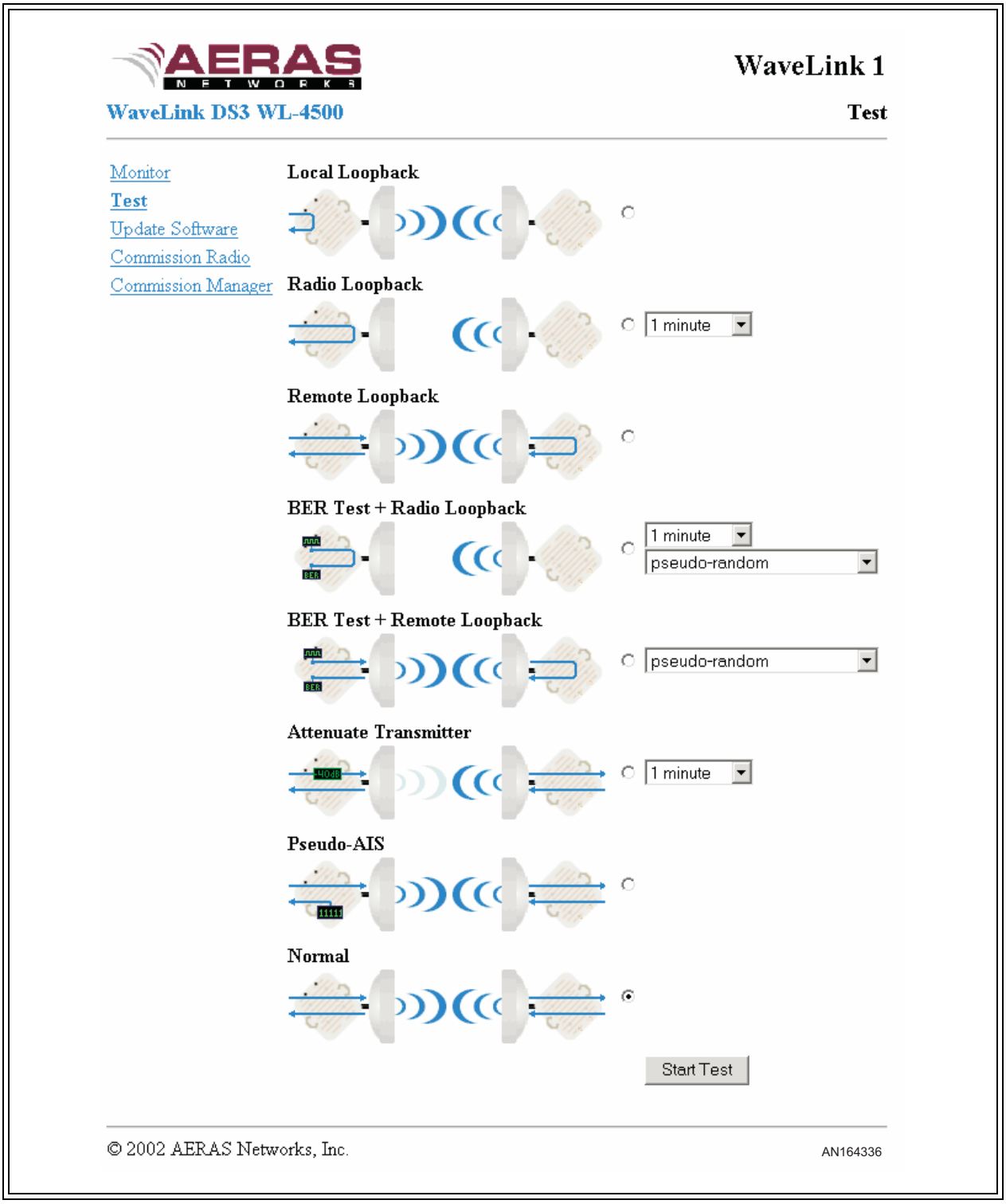

Figure A3-5 Aeras WaveLink DS-3 Test Web Page

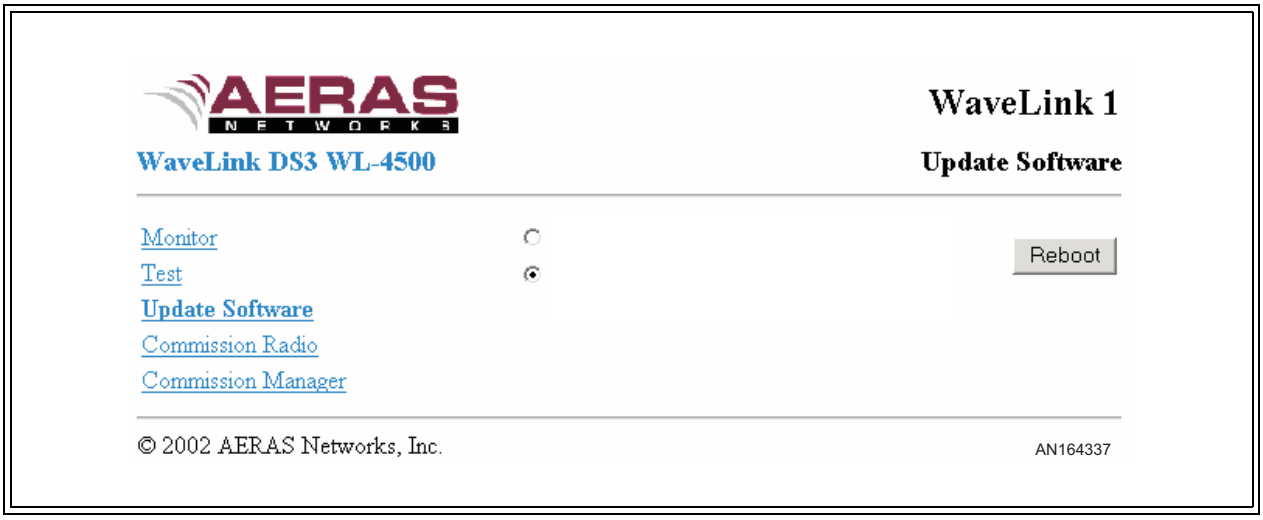

Figure A3-6 Aeras WaveLink DS-3 Update Software Web Page

A3-4.3 Ethernet Versions

AERAS NETWORKS

WaveLink 1

WaveLink WL-4500 **Monitor**

Monitor
Test
Update Software
Commission Radio
Commission Manager

RSSI		-82 dBm	
BER			
Tx Power		-9 dBm	
		Radio Link Status	
RSSI		**Alarm**	
Receiver Overload		Normal	
BER		**Alarm**	
Demodulator Lock		**Alarm**	
		Hardware Status	
Tx Power		Normal	
Tx Synthesizer Lock		Normal	
Rx Synthesizer Lock		Normal	
		Ethernet Input Status	
Ethernet Input		Normal	
Test Mode		Normal	
Radio Channel		1: Tx 5.737 GHz, Rx 5.797 GHz	
Tx Attenuation		Disable	
Maximum Tx Power		-9 dBm	
Automatic Tx Power Control		Enable	
Remote Radio IP Address		192.168.15.134	
RSSI Alarm Level		-80 dBm	
Alarm on Loss of Ethernet Input		Enable	
IP Address		10.0.1.1	
Subnet Mask		255.255.192.0	
Default Gateway		10.0.0.1	
	Model	**Revision**	**Serial Number**
Unit	100748-102	1	0003
PCB	100471-500	2b	006445
Software		CX4500_00.0E09	

© 2002 AERAS Networks, Inc.

AN164316

Figure A3-7 Aeras WaveLink Ethernet Monitor Web Page

Note that the Monitor page has a hypertext link to the Aeras WaveLink on the far end of the radio link for faster troubleshooting and easy movement between the two Aeras WaveLinks.

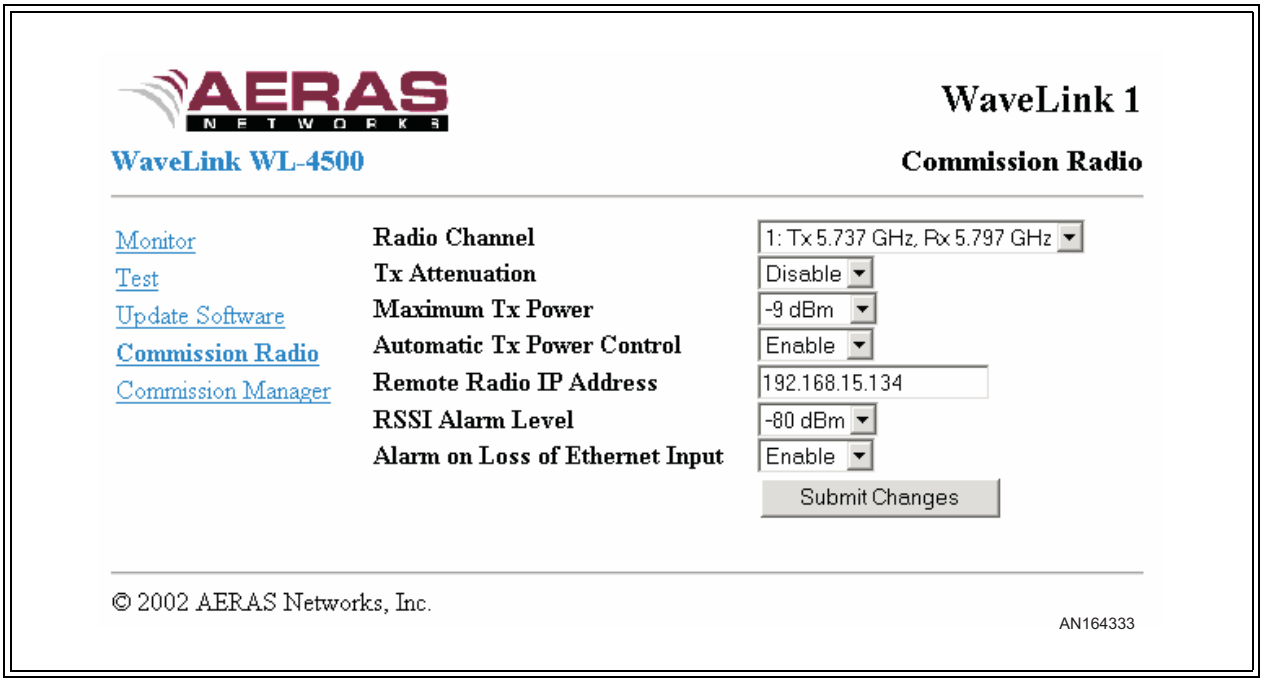

Figure A3-8 Aeras WaveLink Ethernet Commission Radio Web Page

AERAS NETWORKS

WaveLink WL-4500

WaveLink 1

Commission Manager

Monitor
Test
Update Software
Commission Radio
Commission Manager

IP Address	10.0.1.1
Subnet Mask	255.255.192.0
Default Gateway	10.0.0.1
Login Name	root
Login Password	**********
Repeat Password	**********
Allow login	◉ from any IP address ○ from IP addresses in this list
Trap Community	
send Traps to	
Read-Write Community	
allow Read-Write access	◉ from any IP address ○ from IP addresses in this list
Read-Only Community	public
allow Read-Only access	◉ from any IP address ○ from IP addresses in this list
System Name	WaveLink 1
System Contact	naw
System Location	

Submit Changes

© 2002 AERAS Networks, Inc.

AN164335

Figure A3-9 Aeras WaveLink Ethernet Commission Manager Web Page

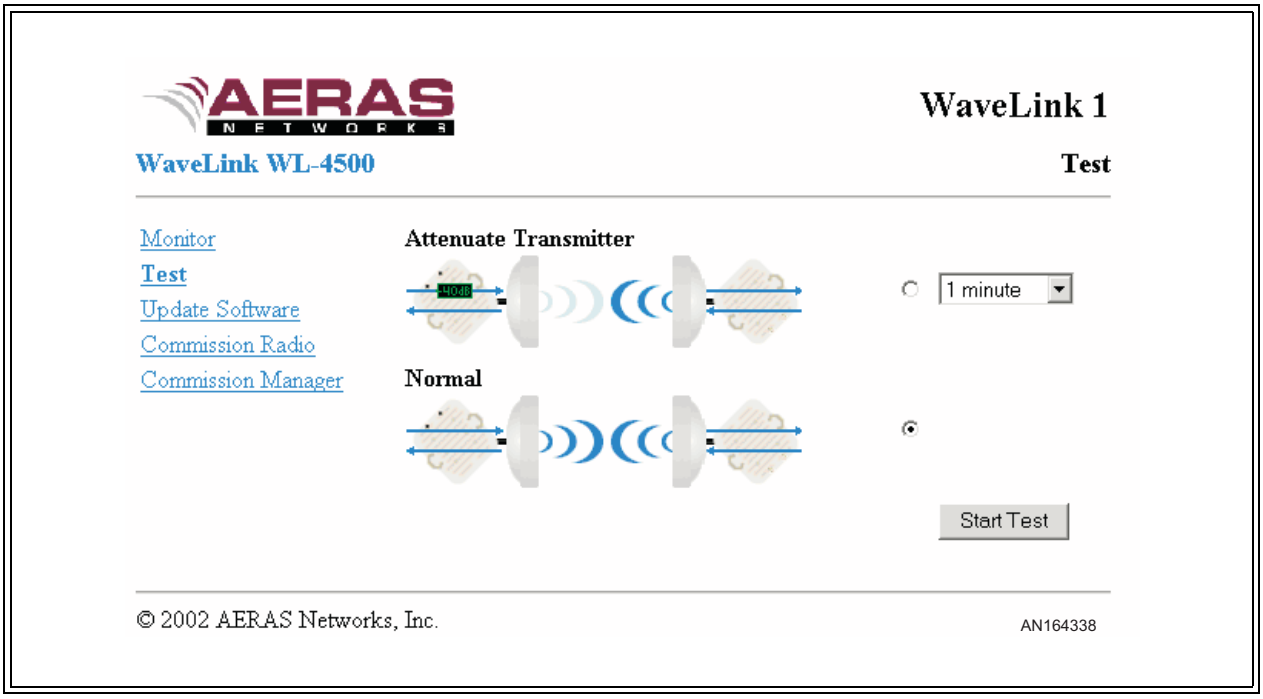

Figure A3-10 Aeras WaveLink Ethernet Test Web Page

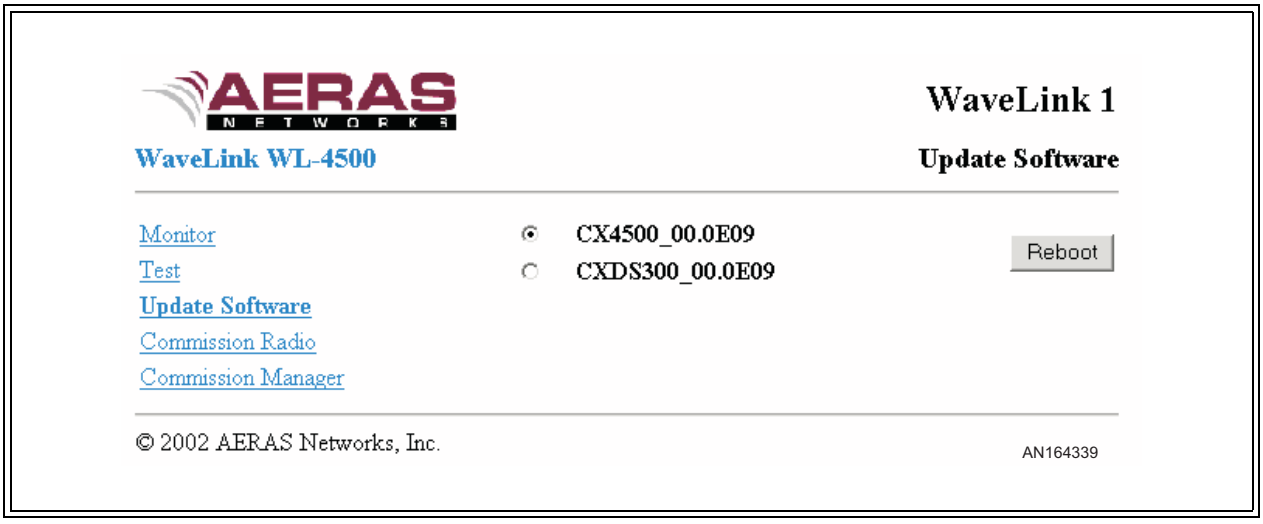

Figure A3-11 Aeras WaveLink Ethernet Update Software Web Page

(this page intentionally left blank)

Appendix 4

Grounding and Lightning Protection

This appendix explains how to properly set up the Aeras WaveLink radio and associated antenna for grounding and lightning protection. It contains the following sections:

- Section A4-1, Overview
- Section A4-2, Grounding
- Section A4-3, Lightning Protection
- Section A4-4, Bibliography

NOTE Aeras Networks strongly recommends that you install a Transtector Lightning Arrestor or equivalent at the cable entry to the Ethernet, Power, and/or DS-3/E3 equipment structure.

A4-1 Overview

When used in telecommunications, good grounding practices have some direct benefits that can help users maximize system uptime as well as ensure the safety of those people working on the system. Among these benefits are:

- Protection of personnel from electric shock and fire hazards
- Reduction of radiated and conducted electromagnetic susceptibility
- Improved system tolerance to discharge of electrostatic energy and lightning interference
- Minimized service interruptions and service damage

No practice or formula can completely eliminate the above risks, but Aeras Networks believes that good grounding and bonding practices can significantly reduce the risk of many of these hazards. This appendix includes a bibliography that contains several publications that are readily available and provide detailed information on many aspects of grounding systems and their design, implementation, measurement, and maintenance.

Please note that every telecommunication site is unique and must be evaluated accordingly. The following information is provided for generic reference and educational purposes only. The grounding plans and practices for a given site should be established and implemented only by trained professionals, working in accordance with local practices and regulations.

> **NOTE** In most cases, following the local code requirements for grounding and lightning protection will be adequate.

A4-2 Grounding

A4-2.1 Making a Grounding Plan

A grounding plan should be developed at the outset of site design to provide the best grounding procedures and to minimize ground loop currents. Grounding should be achieved by connecting the outer conductors of the cables through a large-section copper strap to a central grounding point, and the size of the conductor should be increased as each branch path is added. The final conductor should be connected directly to the grounding system. For a radio site, a single copper grounding rod is insufficient, because its impedance is likely to be too high.

A4-2.2 Grounding Antenna Feeders

All antenna feeders should be bonded to the tower at the upper and lower ends and grounded at the point of entry into the building. Weatherproof grounding kits are available from antenna manufacturers.

> **NOTE** Many of the cables used by Aeras Networks have braided rather than solid outer conductors; this type of grounding is not appropriate. In these cases surge arrestors approved by Aeras Networks should be used. For information on surge arrestors, please contact the Aeras Networks Customer Support department.

A4-2.3 Grounding Buildings

Ideally, a ground ring should surround the building and be connected to individual grounds associated with feeder entry, antenna support structure, the building lightning conductor, the equipment room, the main AC supply, and other facilities. Each connection should be made by the most direct route to minimize interaction between the different grounding functions.

The ground ring should consist of copper cable or tape with electrodes two meters or longer, buried to a depth of 0.6 m and at a distance from the building not to exceed 1 m.

Buildings may require lightning rods if they are not within the zone of another protected structure.

To construct a good ground, ground rods should penetrate the earth to a depth of about 2 m (6 feet). Where the ground is in rocky terrain, make sure that the ground rods penetrate into loose soil. In sandy soil, use more ground rods to make sure that the ground has sufficient contact with water-bearing material.

Use 4 to 6 AWG wire to connect each ground rod to the equipment to be grounded. The cables should be free of sharp bends. Each ground cable should be at least 2 m in length with

at least 1 m separation between each. Refer to local and national electrical codes to determine acceptable grounding methods.

The Aeras WaveLink chassis should be directly connected to ground to ensure that it functions correctly.

A4-3 Lightning Protection

Radio sites can be particularly prone to lightning strikes by virtue of their normally exposed locations and the presence of relatively tall antenna support structures.

> **NOTE** It is not possible to provide and guarantee complete protection from the effects of lightning; however, risks of this sort can be significantly reduced by careful attention to grounding, protection devices, and the layout of the site itself.

Reference should also be made to various publications, some of which are listed in the bibliography. Any site owner or user in doubt about the protection requirements for a particular location should contact the appropriate authority.

A4-3.1 Purposes

The purposes of any protection arrangement should be to:

- Provide a suitable path to ground for the lightning current.
- Ensure adequate bonding between structures and all metalwork on the site and the common grounding system in order to reduce side flashing.
- Prevent the entry of flashes or surges into the building.

The resistance to ground should be kept to a minimum; a value of less than 10 Ohms is recommended. Ideally, and most important, the system should be at equal potential across the entire site.

Certain authorities and service providers have their own particular practices that have to be followed where applicable.

Protection arrangements vary considerably, from very simple sites to complicated sites with multiple buildings, antenna support structures, and associated equipment. Ensuring adequate protection may also involve integration with and upgrading of existing systems.

A4-3.2 Lightning Conductors

Down conductors, bonding interconnections, ground rings, and radial tapes should be of uninsulated 000 AWG copper cable or solid copper tape with a minimum cross section of 25 mm by 3 mm, with all connections protected by nonreactive paste.

Protected test points should be included if appropriate, and sacrificial ground lugs should be clearly marked and easily accessible for periodic inspection.

A4-3.3 Grounding Antenna Support Structures

A structure generally acts as its own lightning conductor and, therefore, does not require an additional conductor from the top to the base. A lightning rod may be required to extend the zone of protection to equipment mounted on the top of the structure. The lightning rod should extend 2.5 m above the highest equipment.

Ground-mounted support structures should be connected at their base to a ground ring through sacrificial ground lugs. Towers should have a connection from each leg.

A ground ring should consist of copper cable or solid copper tape, with ground rods equally spaced at 2-m intervals around the base of the structure as close to it as possible. The ground ring is buried approximately 0.6 m deep where soil conditions allow. An alternative method using radials rather than rings is detailed in The “Grounds” for Lightning and EMP Protection, published by PolyPhaser Corporation.

The ground ring should be connected to the main building ground by the most direct route, and should be buried as appropriate.

Roof-mounted structures should be connected to the main building ground by the most direct route, using sacrificial lugs and copper cable or tape as appropriate. Tower guy wires should be directly bonded at their lowest point to a suitable ground electrode or connected to the site ground by the most direct route.

A4-4 Bibliography

ITU - T K.40
Protection against LEMP in telecommunications centres

ITU - T K.27
Bonding configurations and earthing inside a telecommunication building

ITU - T K.35
Bonding configurations and earthing at remote electronic sites

ITU - T K.39
Risk assessment of damages to telecommunications sites due to lightning discharges

ITU - T Lightning Handbook
The protection of telecommunication lines and equipment against lightning discharges

IEEE Emerald Book
Powering and Grounding

The “Grounds” for Lightning and EMP Protection, second edition
Published by PolyPhaser Corporation

Appendix 5

Enterprise MIBs and Traps

This appendix contains information about the three different sets of Aeras WaveLink Management Information Bases (MIBs), their current listings, and where to find the most current versions.

A5-1 Enterprise MIB

A5-1.1 Overview

The DS-3/E3 and Ethernet Aeras WaveLink Enterprise MIBs consist of the following groups of objects:

- wavelink_identity group: Model, revision, serial numbers, and channel frequency table. Configured in the factory. Read-only by the customer.
- wavelink_configuration group: Channel number and other read-write parameters that the customer chooses. This group is the system's persistent state. It is preserved across reboots.
- wavelink_status group: Performance and alarm status, read-only. Not preserved across reboots.
- wavelink_test group: BERT, loopback, and other temporary state that the customer might use in a test procedure. Read-write. Not preserved across reboots.
- wavelink_reboot group: Identifies the software versions that are available and controls reboot.
- wavelink_trap group: There is only one trap-related variable, trapSentCounter. It is not preserved across reboots.

The following two sections contain details for the DS-3/E3 and Ethernet Aeras WaveLink Enterprise MIBs.

A5-1.2 DS-3/E3 Version Details

```
WN_WAVELINK-MIB DEFINITIONS ::= BEGIN

IMPORTS
  enterprises, Counter
    FROM RFC1155-SMI
  OBJECT-TYPE
    FROM RFC-1212;
```

```
Aeras              OBJECT IDENTIFIER ::= { enterprises  792  }
wavelink        OBJECT IDENTIFIER ::= { Aeras     5   }
wavelink_identity       OBJECT IDENTIFIER ::= { wavelink 1 }
wavelink_configuration  OBJECT IDENTIFIER ::= { wavelink 2}
wavelink_status         OBJECT IDENTIFIER ::= { wavelink 3}
wavelink_test           OBJECT IDENTIFIER ::= { wavelink 4}
wavelink_reboot         OBJECT IDENTIFIER ::= { wavelink 5}
wavelink_trap           OBJECT IDENTIFIER ::= { wavelink 6}

-- wavelink_identity group

unitModelNumber OBJECT-TYPE
  SYNTAX  DisplayString (SIZE (0..15))
  ACCESS  read-only
  STATUS  mandatory
  DESCRIPTION
      "The model number of the unit as a whole."
  ::= { wavelink_identity 1}

unitRevisionNumber  OBJECT-TYPE
  SYNTAX  DisplayString (SIZE (0..15))
  ACCESS  read-only
  STATUS  mandatory
  DESCRIPTION
      "The revision number of the unit as a whole."
  ::= { wavelink_identity 2}

unitSerialNumber   OBJECT-TYPE
  SYNTAX  DisplayString (SIZE (0..15))
  ACCESS  read-only
  STATUS  mandatory
  DESCRIPTION
      "The serial number of the unit as a whole."
  ::= { wavelink_identity 3}

boardModelNumber OBJECT-TYPE
  SYNTAX  DisplayString (SIZE (0..15))
  ACCESS  read-only
  STATUS  mandatory
  DESCRIPTION
      "The model number of the PCB board assembly."
  ::= { wavelink_identity 4}

boardRevisionNumber  OBJECT-TYPE
  SYNTAX  DisplayString (SIZE (0..15))
  ACCESS  read-only
  STATUS  mandatory
  DESCRIPTION
      "The revision number of the PCB board assembly."
  ::= { wavelink_identity 5}
```

```
boardSerialNumber   OBJECT-TYPE
  SYNTAX  DisplayString (SIZE (0..15))
  ACCESS  read-only
  STATUS  mandatory
  DESCRIPTION
      "The serial number of the PCB board assembly."
  ::= { wavelink_identity 6}

rfFrequencyTable OBJECT-TYPE
  SYNTAX  SEQUENCE OF RfChannelFreqEntry
  ACCESS not-accessible
  STATUS mandatory
  DESCRIPTION
      "The table of 2 selectable Tx/Rx frequency channel pairs, in MHz. The
      receive frequency on a Tx-high unit is lower than the transmit frequency
      by the amount of the Tx/Rx separation. Conversely, the receive frequency
      on a Tx-low unit is higher than the transmit frequency by the amount of
      the Tx/Rx separation."
  ::= { wavelink_identity 7}

rfFrequencyEntry OBJECT-TYPE
  SYNTAX  RfFrequencyEntry
  ACCESS  not-accessible
  STATUS  mandatory
  DESCRIPTION
      "Channel frequency entry."
  INDEX   { rfChannelIndex}
  ::= { rfFrequencyTable 1}

RfFrequencyEntry ::=
  SEQUENCE {
    rfChannelIndex
      INTEGER,
    rfTxFrequency
      INTEGER,
    rfRxFrequency
      INTEGER
  }

rfChannelIndex OBJECT-TYPE
  SYNTAX  INTEGER (1..2)
  ACCESS  read-only
  STATUS  mandatory
  DESCRIPTION
      "The RF channel number."
  ::= { rfFrequencyEntry 1}

rfTxFrequency OBJECT-TYPE
  SYNTAX  INTEGER
  ACCESS  read-only
  STATUS  mandatory
```

```
  DESCRIPTION
      "The transmit frequency in MHz."
  ::= { rfFrequencyEntry 2}

rfRxFrequency OBJECT-TYPE
  SYNTAX  INTEGER
  ACCESS  read-only
  STATUS  mandatory
  DESCRIPTION
      "The receive frequency in MHz."
  ::= { rfFrequencyEntry 3}

-- wavelink_configuration group

rfTxAttenuateControl OBJECT-TYPE
  SYNTAX  INTEGER {
      enabled(1),
      disabled(2)
      }
  ACCESS  read-write
  STATUS  mandatory
  DESCRIPTION
      "If enabled, attenuates the transmit output level by 40 dB."
  ::= }wavelink_configuration 1}

rfAtpcControl   OBJECT-TYPE
  SYNTAX  INTEGER {
      enabled(1),
      disabled(2)
      }
  ACCESS  read-write
  STATUS  mandatory
  DESCRIPTION
      "Automatic Tx Power Control mode can be enabled or disabled.
      If enabled, the two Aeras WaveLink radios at opposite ends of the
      radio link send each other feedback messages that they use
      to adjust their Tx power down to the lowest level that is
      consistent with good signal quality."
  ::= }wavelink_configuration 2}

rfTxPowerLimit   OBJECT-TYPE
  SYNTAX  INTEGER (-14..16)
  ACCESS  read-write
  STATUS  mandatory
  DESCRIPTION
      "Maximum transmit power level limit at the antenna port, in dBm.
      The Tx power limit can be set in 1 dB steps within the range
      of -14 dBm to +16 dBm. If Automatic Tx Power Control is enabled
      the measured Tx power may be lower than this limit. If Automatic
      Tx Power Control is disabled the measured Tx power should be
```

```
      exactly the same as this target value."
  ::= }wavelink_configuration 3}

rfAtpcAddress   OBJECT-TYPE
  SYNTAX IpAddress
  ACCESS  read-write
  STATUS  mandatory
  DESCRIPTION
      "The IP Address of the peer radio with which this radio exchanges
      Automatic Tx Power Control information."
  ::= }wavelink_configuration 4}

rfChannel     OBJECT-TYPE
  SYNTAX  INTEGER (1..2)
  ACCESS  read-write
  STATUS  mandatory
  DESCRIPTION
      "The current transmit channel of the local unit. The transmit
      frequency in MHz for each channel can be read in the rfFrequencyTable."
  ::= }wavelink_configuration 5}

rfRssiAlarmThresholdSetting   OBJECT-TYPE
  SYNTAX  INTEGER (-80..-40)
  ACCESS  read-write
  STATUS  mandatory
  DESCRIPTION

      "A RSSI Alarm will be generated if the level of RSSI goes below
      the set threshold. The threshold can be set in 1 dB steps
      within the range of -80 to -40 dBm."
  ::= }wavelink_configuration 6}

ds3LosAlarmControl   OBJECT-TYPE
  SYNTAX  INTEGER {
       enabled(1),
       disabled(2)
      }
  ACCESS  read-write
  STATUS  mandatory
  DESCRIPTION
      "DS3 LOS alarm control. When enabled, the alarm will be generated.
      When disabled, the alarm will not be generated even if
      LOS condition is detected."
  ::= }wavelink_configuration 7}

-- wavelink_status group

rfPowerOutputLevel OBJECT-TYPE
  SYNTAX  INTEGER
  ACCESS  read-only
  STATUS  mandatory
  DESCRIPTION
```

```
      "The measured radio Tx power level in dBm."
  ::= }wavelink_status 1}

rfRssiLevel OBJECT-TYPE
  SYNTAX  INTEGER
  ACCESS  read-only
  STATUS  mandatory
  DESCRIPTION
      "The measured RSSI of the active channel in dBm. -110 dBm
      indicates the receive signal level is below the detection level."
  ::= }wavelink_status 2}

bitErrorRate OBJECT-TYPE
  SYNTAX  INTEGER
  ACCESS  read-only
  STATUS  mandatory
  DESCRIPTION
      "The estimated bit error rate (BER), in errors per 10^8 bits.
      A returned value of 0 indicates zero bit errors in 10^8 bits.
      A returned value of 1 indicates an estimated BER of 1x10^-8.
      A returned value of 10 indicates an estimated BER of 1x10^-7,
      and so on."
  ::= }wavelink_status 3}

losAlarmStatus OBJECT-TYPE    -- DS3 interface alarm condition
  SYNTAX  INTEGER {
       normal(1),
       alarm(2)
      }
  ACCESS  read-only
  STATUS  mandatory
  DESCRIPTION
      "A value of 1 indicates a DS3 connection is present.
      A value of 2 indicates the DS3 connection has been lost.
      If ds3LosAlarmControl = disabled, losAlarmStatus will
      always be normal."
  ::= }wavelink_status 4}

txSynthLockAlarmStatus OBJECT-TYPE    -- local alarm condition
  SYNTAX  INTEGER {
       normal(1),
       alarm(2)
      }
  ACCESS  read-only
  STATUS  mandatory
  DESCRIPTION
      "The Tx synthesizer lock status.
      A value of 1 indicates the Tx synthesizer is locked.
      A value of 2 indicates the Tx synthesizer is unlocked"
  ::= }wavelink_status 5}
```

```
rxSynthLockAlarmStatus OBJECT-TYPE  -- local alarm condition
  SYNTAX  INTEGER {
       normal(1),
       alarm(2)
      }
  ACCESS  read-only
  STATUS  mandatory
  DESCRIPTION
      "The Rx synthesizer lock status.
      A value of 1 indicates the Rx synthesizer is locked.
      A value of 2 indicates the Rx synthesizer is unlocked"
  ::= }wavelink_status 6}

lowTxPowerAlarmStatus OBJECT-TYPE   -- local alarm condition
  SYNTAX  INTEGER {
       normal(1),
       alarm(2)
      }
  ACCESS  read-only
  STATUS  mandatory
  DESCRIPTION
      "A value of 1 indicates the Tx power at the antenna port
      is greater than or equal to -14 dBm. A value of 2 indicates
      the Tx power at the antenna port is less than -14 dBm."
  ::= }wavelink_status 7}

demodLockAlarmStatus OBJECT-TYPE    -- link alarm condition
  SYNTAX  INTEGER {
       normal(1),
       alarm(2)
      }
  ACCESS  read-only
  STATUS  mandatory
  DESCRIPTION
      "The demodulator lock status.
      A value of 1 indicates the demodulator is locked.
      A value of 2 indicates the demodulator is unlocked"
  ::= }wavelink_status 8}

lowRssiLevelAlarmStatus OBJECT-TYPE -- link alarm condition
  SYNTAX  INTEGER {
       normal(1),
       alarm(2)
      }
  ACCESS  read-only
  STATUS  mandatory
  DESCRIPTION
      "A RSSI alarm will be generated if the level of RSSI goes below
      the user configured RSSI alarm level, rfRssiAlarmThresholdSetting.
      A value of 1 indicates the received signal level is above the RSSI
      alarm threshold. A value of 2 indicates the received signal level
```

```
      is at or below the user configured RSSI alarm level.
      This alarm is valid only if the Rx synthesizer is locked."
  ::= }wavelink_status 9}

receiverOverloadAlarmStatus OBJECT-TYPE -- link alarm condition
  SYNTAX  INTEGER {
       normal(1),
       alarm(2)
      }
  ACCESS  read-only
  STATUS  mandatory
  DESCRIPTION
      "A receiver overload alarm will be generated if the level
      of RSSI is at or above -40 dBm. A value of 1 indicates the
      received signal level is below -40 dBm. A value of 2 indicates
      the received signal level is at or above -40 dBm.
      This alarm is only valid if the Rx synthesizer is locked."
  ::= }wavelink_status 10}

bitErrorRateAlarmStatus OBJECT-TYPE -- link alarm condition
  SYNTAX  INTEGER {
       normal(1),
       alarm(2)
      }
  ACCESS  read-only
  STATUS  mandatory
  DESCRIPTION
      "A bit error rate alarm will be generated if the level
      of BER is at or above 10^-3, i.e. if bitErrorRate is
      equal to or greater than 100000."
  ::= }wavelink_status 11}

-- wavelink_test group

rfTxAttenuateTimer   OBJECT-TYPE
  SYNTAX  INTEGER (0..1800)
  ACCESS  read-write
  STATUS  mandatory
  DESCRIPTION
      "To temporarily enable Tx attenuation by 40 dB, write the number of
      seconds to this timer. When the timer counts down to 0, Tx attenuation
      will return to its normal unattenuated state. Writing to this timer
      has no effect if rfTxAttenuateControl is set to enable because in
      that case the transmitter is already attenuated."
  ::= }wavelink_test 1}

ds3LocalLoopbackControl OBJECT-TYPE
  SYNTAX  INTEGER {
       enabled(1),
       disabled(2)
      }
```

```
  ACCESS  read-write
  STATUS  mandatory
  DESCRIPTION
      "The DS3 local loopback control. When enabled, DS3 data on the
      local interface is looped back through the local interface.
      When disabled, DS3 data on the local interface is sent over
      the radio link to the remote unit."
  ::= }wavelink_test 2}

rfLocalLoopbackTimer   OBJECT-TYPE
  SYNTAX  INTEGER (0..1800)
  ACCESS  read-write
  STATUS  mandatory
  DESCRIPTION
      "When this value is greater than zero, the radio is in the local
      loopback mode. The RF transmit signal on the local unit is
      converted to the receive frequency of the local unit so it can
      be received by the local unit, for the chosen period of time in
      seconds. When this timer counts down to 0 the unit reverts to
      normal operation in which the RF transmit signal on the local unit
      is transmitted over the radio link to the remote unit. The duration
      is selectable in 1 second intervals from 0 seconds to a maximum of
      1800 seconds."
  ::= }wavelink_test 3}

ds3RemoteLoopbackControl OBJECT-TYPE
  SYNTAX  INTEGER {
       enabled(1),
       disabled(2)
      }
  ACCESS  read-write
  STATUS  mandatory
  DESCRIPTION
      "The DS3 remote loopback control. When enabled, DS3 data on the remote
      interface is looped back through the remote interface. When disabled,
      DS3 data on the remote interface is sent over the radio link to the
      local unit."
  ::= }wavelink_test 4}

ds3BerTestControl   OBJECT-TYPE
  SYNTAX  INTEGER {
       alternatingOnesZeros(1),
       allOnes(2),
       allZeros(3),
       disabled(4)
      }
  ACCESS  read-write
  STATUS  mandatory
  DESCRIPTION
      "BER test mode control. The BER test is enabled by selecting one of
      three different data patterns. The patterns are:
```

```
      (1) alternating 1's and 0's, (2) all 1's, and (3) all 0's.
      The BER test is disabled by setting the BER test control to 4."
  ::= }wavelink_test 5}

pseudoAisControl   OBJECT-TYPE
  SYNTAX  INTEGER {
       enabled(1),
       disabled(2)
      }
  ACCESS  read-write
  STATUS  mandatory
  DESCRIPTION
      "When enabled, pseudo-AIS (constant mark or all ones at the DS3
      interface) will be generated."
  ::= }wavelink_test 6}

-- wavelink_reboot group

softwareVersionBank1 OBJECT-TYPE
  SYNTAX  DisplayString (SIZE (0..15))
  ACCESS  read-only
  STATUS  mandatory
  DESCRIPTION
      "The software version in bank one."
  ::= }wavelink_reboot 1}

softwareVersionBank2 OBJECT-TYPE
  SYNTAX  DisplayString (SIZE (0..15))
  ACCESS  read-only
  STATUS  mandatory
  DESCRIPTION
      "The software version in bank two."
  ::= }wavelink_reboot 2}

bootedUsingBankNumber OBJECT-TYPE
  SYNTAX  INTEGER {
      bankOne(1),
      bankTwo(2)
      }
  ACCESS  read-only
  STATUS  mandatory
  DESCRIPTION
      "The software bank from which the unit booted."
  ::= }wavelink_reboot 3}

bootUsingBankNumber OBJECT-TYPE
  SYNTAX  INTEGER {

      bankOne(1),
      bankTwo(2)
      }
  ACCESS  read-write
```

```
  STATUS  mandatory
  DESCRIPTION
      "Selects the software bank and causes reboot."
  ::= }wavelink_reboot 4}

-- traps

trapSentCounter OBJECT-TYPE
  SYNTAX  Counter
  ACCESS  read-only
  STATUS  mandatory
  DESCRIPTION
      "Total number of enterprise traps sent since last reboot."
  ::= }wavelink_trap 1}

wavelink_unit OBJECT IDENTIFIER ::= }wavelink 101}

alarmTrap  TRAP-TYPE
  ENTERPRISE  wavelink_unit
  VARIABLES  }rfPowerOutputLevel,
             rfRssiLevel,
             bitErrorRate,
             losAlarmStatus,
             txSynthLockAlarmStatus,
             rxSynthLockAlarmStatus,
             lowTxPowerAlarmStatus,
             demodLockAlarmStatus,
             lowRssiLevelAlarmStatus,
             receiverOverloadAlarmStatus,
             bitErrorRateAlarmStatus,
             trapSentCounter}
  DESCRIPTION
      "A trap that indicates a change in one or more of the alarm conditions."
  ::= 1

configurationChangeTrap  TRAP-TYPE
  ENTERPRISE  wavelink_unit
  VARIABLES  }rfTxAttenuateControl,
             rfAtpcControl,
             rfTxPowerLimit,
             rfAtpcAddress,
             rfChannel,
             rfRssiAlarmThresholdSetting,
             ds3LosAlarmControl,
             trapSentCounter}
  DESCRIPTION
      "A trap that indicates a configuration change."
  ::= 2

unitTestTrap  TRAP-TYPE
  ENTERPRISE  wavelink_unit
  VARIABLES  }rfTxAttenuateTimer,
```

```
            ds3LocalLoopbackControl,
            rfLocalLoopbackTimer,
            ds3RemoteLoopbackControl,
            ds3BerTestControl,|
            pseudoAisControl,
            trapSentCounter }
  DESCRIPTION
      "A trap that indicates the beginning or end of a test procedure.
      An alarmTrap trap might result from this procedure."
  ::= 3

END
```

A5-1.3 Ethernet Version Details

```
WN_WAVELINK_ETHR_MIB DEFINITIONS ::= BEGIN

IMPORTS
enterprises, Counter
    FROM RFC1155-SMI
OBJECT-TYPE
    FROM RFC-1212;

Aeras                    OBJECT IDENTIFIER ::= { enterprises 792 }
wavelink_ethr            OBJECT IDENTIFIER ::= { Aeras 6 }
wavelink_identity        OBJECT IDENTIFIER ::= { wavelink_ethr 1 }
wavelink_configuration   OBJECT IDENTIFIER ::= { wavelink_ethr 2 }
wavelink_status          OBJECT IDENTIFIER ::= { wavelink_ethr 3 }
wavelink_test            OBJECT IDENTIFIER ::= { wavelink_ethr 4 }
wavelink_reboot          OBJECT IDENTIFIER ::= { wavelink_ethr 5 }
wavelink_trap            OBJECT IDENTIFIER ::= { wavelink_ethr 6 }

-- wavelink_identity group

unitModelNumber OBJECT-TYPE
SYNTAXDisplayString (SIZE (0..15))
ACCESSread-only
STATUSmandatory
DESCRIPTION
      "The model number of the unit as a whole."
::= { wavelink_identity 1 }

unitRevisionNumberOBJECT-TYPE
SYNTAXDisplayString (SIZE (0..15))
ACCESSread-only
STATUSmandatory
DESCRIPTION
      "The revision number of the unit as a whole."
::= { wavelink_identity 2 }

unitSerialNumber     OBJECT-TYPE
SYNTAXDisplayString (SIZE (0..15))
```

```
ACCESSread-only
STATUSmandatory
DESCRIPTION
        "The serial number of the unit as a whole."
::= { wavelink_identity 3 }

boardModelNumber OBJECT-TYPE
SYNTAXDisplayString (SIZE (0..15))
ACCESSread-only
STATUSmandatory
DESCRIPTION
        "The model number of the PCB board assembly."
::= { wavelink_identity 4 }

boardRevisionNumberOBJECT-TYPE
SYNTAXDisplayString (SIZE (0..15))
ACCESSread-only
STATUSmandatory
DESCRIPTION
        "The revision number of the PCB board assembly."
::= { wavelink_identity 5 }

boardSerialNumber     OBJECT-TYPE
SYNTAXDisplayString (SIZE (0..15))
ACCESSread-only
STATUSmandatory
DESCRIPTION
        "The serial number of the PCB board assembly."
::= { wavelink_identity 6 }

rfFrequencyTable OBJECT-TYPE
SYNTAXSEQUENCE OF RfChannelFreqEntry
ACCESS not-accessible
STATUS mandatory
DESCRIPTION
        "The table of 2 selectable Tx/Rx frequency channel pairs, in MHz. The
        receive frequency on a Tx-high unit is lower than the transmit frequency
        by the amount of the Tx/Rx separation. Conversely, the receive frequency
        on a Tx-low unit is higher than the transmit frequency by the amount of
        the Tx/Rx separation."
::= { wavelink_identity 7 }

rfFrequencyEntry OBJECT-TYPE
SYNTAXRfFrequencyEntry
ACCESSnot-accessible
STATUSmandatory
DESCRIPTION
        "Channel frequency entry."
INDEX     { rfChannelIndex }
   ::= { rfFrequencyTable 1 }
```

```
RfFrequencyEntry ::=
  SEQUENCE {
    rfChannelIndex

      INTEGER,
    rfTxFrequency
      INTEGER,
    rfRxFrequency
      INTEGER
  }

rfChannelIndex OBJECT-TYPE
  SYNTAX   INTEGER (1..2)
  ACCESS   read-only
  STATUS   mandatory
  DESCRIPTION

      "The RF channel number."
  ::= { rfFrequencyEntry 1 }

rfTxFrequency OBJECT-TYPE
  SYNTAX   INTEGER
  ACCESS   read-only
  STATUS   mandatory
  DESCRIPTION
      "The transmit frequency in MHz."
  ::= { rfFrequencyEntry 2 }

rfRxFrequency OBJECT-TYPE
SYNTAXINTEGER
ACCESSread-only
STATUSmandatory
DESCRIPTION
      "The receive frequency in MHz."
::= { rfFrequencyEntry 3 }

-- wavelink_configuration group

rfTxAttenuateControl OBJECT-TYPE
SYNTAXINTEGER {
      enabled(1),
      disabled(2)
      }
ACCESSread-write
STATUSmandatory
DESCRIPTION
      "If enabled, attenuates the transmit output level by 40 dB."

::= { wavelink_configuration 1 }

rfAtpcControl     OBJECT-TYPE
SYNTAXINTEGER {
      enabled(1),
```

```
        disabled(2)
        }
ACCESSread-write
STATUSmandatory
DESCRIPTION
        "Automatic Tx Power Control mode can be enabled or disabled.
        If enabled, the two Aeras WaveLink radios at opposite ends of the
        radio link send each other feedback messages that they use
        to adjust their Tx power down to the lowest level that is
        consistent with good signal quality."
::= { wavelink_configuration 2 }

rfTxPowerLimit     OBJECT-TYPE
SYNTAXINTEGER (-14..16)
ACCESSread-write
STATUSmandatory
DESCRIPTION
        "Maximum transmit power level limit at the antenna port, in dBm.
        The Tx power limit can be set in 1 dB steps within the range
        of -14 dBm to +16 dBm. If Automatic Tx Power Control is enabled
        the measured Tx power may be lower than this limit. If Automatic
        Tx Power Control is disabled the measured Tx power should be
        exactly the same as this target value."
::= { wavelink_configuration 3 }

rfAtpcAddressOBJECT-TYPE
SYNTAX IpAddress
ACCESSread-write
STATUSmandatory
DESCRIPTION
        "The IP Address of the peer radio with which this radio exchanges
        Automatic Tx Power Control information."
::= { wavelink_configuration 4 }

rfChannel       OBJECT-TYPE
SYNTAXINTEGER (1..2)
ACCESSread-write
STATUSmandatory
DESCRIPTION
        "The current transmit channel of the local unit. The transmit
        frequency in MHz for each channel can be read in the rfFrequencyTable."
::= { wavelink_configuration 5 }

rfRssiAlarmThresholdSetting     OBJECT-TYPE
SYNTAXINTEGER (-80..-40)
ACCESSread-write
STATUSmandatory
DESCRIPTION
        "A RSSI Alarm will be generated if the level of RSSI goes below
        the set threshold.The threshold can be set in 1 dB steps
```

```
        within the range of -80 to -40 dBm."
::= { wavelink_configuration 6 }

losAlarmControl     OBJECT-TYPE
SYNTAXINTEGER {
        enabled(1),
        disabled(2)
        }
ACCESSread-write
STATUSmandatory
DESCRIPTION
        "Ethernet Loss Of Signal alarm control. When enabled, the alarm will
        be generated. When disabled, the alarm will not be generated even if
        LOS condition is detected."
::= { wavelink_configuration 7 }

-- wavelink_status group

rfPowerOutputLevel OBJECT-TYPE
SYNTAXINTEGER
ACCESSread-only
STATUSmandatory
DESCRIPTION
        "The measured radio Tx power level in dBm."
::= { wavelink_status 1 }

rfRssiLevel OBJECT-TYPE
SYNTAXINTEGER
ACCESSread-only
STATUSmandatory
DESCRIPTION
        "The measured RSSI of the active channel in dBm. -110 dBm
        indicates the receive signal level is below the detection level."
::= { wavelink_status 2 }

bitErrorRate OBJECT-TYPE
SYNTAXINTEGER
ACCESSread-only
STATUSmandatory
DESCRIPTION
        "The estimated bit error rate (BER), in errors per 10^8 bits.
        A returned value of 0 indicates zero bit errors in 10^8 bits.
        A returned value of 1 indicates an estimated BER of 1x10^-8.
        A returned value of 10 indicates an estimated BER of 1x10^-7,
        and so on."
::= { wavelink_status 3 }

losAlarmStatus OBJECT-TYPE     -- interface alarm condition
SYNTAXINTEGER {
        normal(1),
        alarm(2)
        }
```

```
ACCESSread-only
STATUSmandatory
DESCRIPTION
        "A value of 1 indicates an Ethernet connection is present.
        A value of 2 indicates the Ethernet connection has been lost.
        If losAlarmControl = disabled, losAlarmStatus will
        always be normal."

::= { wavelink_status 4 }

txSynthLockAlarmStatus OBJECT-TYPE     -- local alarm condition
SYNTAXINTEGER {
         normal(1),
         alarm(2)
         }
ACCESSread-only
STATUSmandatory
DESCRIPTION
        "The Tx synthesizer lock status.
        A value of 1 indicates the Tx synthesizer is locked.
        A value of 2 indicates the Tx synthesizer is unlocked"
::= { wavelink_status 5 }

rxSynthLockAlarmStatus OBJECT-TYPE-- local alarm condition
SYNTAXINTEGER {
         normal(1),
         alarm(2)
         }
ACCESSread-only
STATUSmandatory
DESCRIPTION
        "The Rx synthesizer lock status.
        A value of 1 indicates the Rx synthesizer is locked.
        A value of 2 indicates the Rx synthesizer is unlocked"
::= { wavelink_status 6 }

lowTxPowerAlarmStatus OBJECT-TYPE     -- local alarm condition
SYNTAXINTEGER {
         normal(1),
         alarm(2)
         }
ACCESSread-only
STATUSmandatory
DESCRIPTION
        "A value of 1 indicates the Tx power at the antenna port
        is greater than or equal to -14 dBm. A value of 2 indicates
        the Tx power at the antenna port is less than -14 dBm."
::= { wavelink_status 7 }

demodLockAlarmStatus OBJECT-TYPE     -- link alarm condition
SYNTAXINTEGER {
```

```
        normal(1),
        alarm(2)
        }
ACCESSread-only
STATUSmandatory
DESCRIPTION
       "The demodulator lock status.
       A value of 1 indicates the demodulator is locked.
       A value of 2 indicates the demodulator is unlocked"
::= { wavelink_status 8 }

lowRssiLevelAlarmStatus OBJECT-TYPE -- link alarm condition
SYNTAXINTEGER {
        normal(1),
        alarm(2)
        }
ACCESSread-only
STATUSmandatory
DESCRIPTION
       "A RSSI alarm will be generated if the level of RSSI goes below
       the user configured RSSI alarm level, rfRssiAlarmThresholdSetting.
       A value of 1 indicates the received signal level is above the RSSI
       alarm threshold. A value of 2 indicates the received signal level
       is at or below the user configured RSSI alarm level.
       This alarm is valid only if the Rx synthesizer is locked."
::= { wavelink_status 9 }

receiverOverloadAlarmStatus OBJECT-TYPE -- link alarm condition
SYNTAXINTEGER {
        normal(1),
        alarm(2)
        }
ACCESSread-only
STATUSmandatory
DESCRIPTION
       "A receiver overload alarm will be generated if the level
       of RSSI is at or above -40 dBm. A value of 1 indicates the
       received signal level is below -40 dBm. A value of 2 indicates
       the received signal level is at or above -40 dBm.
       This alarm is only valid if the Rx synthesizer is locked."
::= { wavelink_status 10 }

bitErrorRateAlarmStatus OBJECT-TYPE -- link alarm condition
SYNTAXINTEGER {
        normal(1),
        alarm(2)
        }
ACCESSread-only
STATUSmandatory
DESCRIPTION
       "A bit error rate alarm will be generated if the level
```

```
        of BER is at or above 10^-3, i.e. if bitErrorRate is
        equal to or greater than 100000."
::= { wavelink_status 11 }

-- wavelink_test group

rfTxAttenuateTimer     OBJECT-TYPE
SYNTAXINTEGER (0..1800)
ACCESSread-write
STATUSmandatory
DESCRIPTION
        "To temporarily enable Tx attenuation by 40 dB, write the number of
        seconds to this timer. When the timer counts down to 0, Tx attenuation
        will return to its normal unattenuated state. Writing to this timer
        has no effect if rfTxAttenuateControl is set to enable because in
        that case the transmitter is already attenuated."
::= { wavelink_test 1 }

-- wavelink_reboot group

softwareVersionBank1 OBJECT-TYPE
SYNTAXDisplayString (SIZE (0..15))
ACCESSread-only
STATUSmandatory
DESCRIPTION
        "The software version in bank one."
::= { wavelink_reboot 1 }

softwareVersionBank2 OBJECT-TYPE
SYNTAXDisplayString (SIZE (0..15))
ACCESSread-only
STATUSmandatory
DESCRIPTION
        "The software version in bank two."
::= { wavelink_reboot 2 }

bootedUsingBankNumber OBJECT-TYPE
SYNTAXINTEGER {
        bankOne(1),
        bankTwo(2)
        }
ACCESSread-only
STATUSmandatory
DESCRIPTION
        "The software bank from which the unit booted."
::= { wavelink_reboot 3 }

bootUsingBankNumber OBJECT-TYPE
SYNTAXINTEGER {
        bankOne(1),
        bankTwo(2)
        }
```

```
ACCESSread-write
STATUSmandatory
DESCRIPTION
        "Selects the software bank and causes reboot."
::= { wavelink_reboot 4 }

-- traps

trapSentCounter OBJECT-TYPE
SYNTAXCounter
ACCESSread-only
STATUSmandatory
DESCRIPTION
        "Total number of enterprise traps sent since last reboot."
::= { wavelink_trap 1 }

wavelink_unit OBJECT IDENTIFIER ::= { wavelink_ethr 101 }

alarmTrapTRAP-TYPE
ENTERPRISEwavelink_unit
VARIABLES{ rfPowerOutputLevel,
            rfRssiLevel,
            bitErrorRate,
            losAlarmStatus,
            txSynthLockAlarmStatus,
            rxSynthLockAlarmStatus,
            lowTxPowerAlarmStatus,
            demodLockAlarmStatus,
            lowRssiLevelAlarmStatus,
            receiverOverloadAlarmStatus,
            bitErrorRateAlarmStatus,
            trapSentCounter }
DESCRIPTION
        "A trap that indicates a change in one or more of the alarm conditions."
::= 1

configurationChangeTrapTRAP-TYPE
ENTERPRISEwavelink_unit
VARIABLES{ rfTxAttenuateControl,
            rfAtpcControl,
            rfTxPowerLimit,
            rfAtpcAddress,
            rfChannel,
            rfRssiAlarmThresholdSetting,
            losAlarmControl,
            trapSentCounter }
DESCRIPTION
        "A trap that indicates a configuration change."
::= 2

unitTestTrapTRAP-TYPE
ENTERPRISEwavelink_unit
```

```
VARIABLES{ rfTxAttenuateTimer,
           trapSentCounter }
DESCRIPTION
      "A trap that indicates the beginning or end of a test procedure.
      An alarmTrap trap might result from this procedure."
::= 3
END
```

A5-2 Enterprise Traps

Aeras WaveLink supports three enterpriseSpecific traps - alarmTrap, configurationChange-Trap, and unitTestTrap. Each of these traps contains all the relevant variables for that particular trap, in order to minimize polling. One variable that is in each of the traps is a counter, so that the network management application can detect loss of traps.

A5-2.1 alarmTrap

Aeras WaveLink sends this trap when any of the alarm variables changes, either going into or out of an alarm condition. All of the relevant alarm conditions and performance data are contained in the trap PDU, along with a counter of enterprise traps sent. The variables include:

- trap counter
- DS3 LOS status (DS3 input absent/present)
- Tx Power status (under/over minimum power)
- Tx Synthesizer lock status (unlocked/locked)
- Rx Synthesizer lock status (unlocked/locked)
- RSSI level status (under minimum level)
- Rx overload status (over maximum level)
- BER status (over threshold)
- demodulator lock status (unlocked/locked)
- BER
- RSSI
- Tx Power

A5-2.2 configurationChangeTrap

Aeras WaveLink sends this trap when the persistent state of the Aeras WaveLink changes. This trap alerts the network management application that it must refresh its database. If all management is through SNMP exclusively, this trap is redundant. If on the other hand, management is a mixture of HTTP and SNMP this will keep the SNMP side completely consistent. All the relevant persistent state variables are contained in the trap PDU, along with the trap counter. The variables include:

- trap counter
- Tx control (attenuated/unattenuated)
- ATPC control (ATPC enabled/disabled)
- Tx power setting
- ATPC peer IP address (IP address of the WaveLink at the other end of the radio link)
- channel number
- RSSI alarm threshold
- DS3 LOS control (enable/disable alarm for LOS)

A5-2.3 unitTestTrap

Aeras WaveLink sends this trap when any of the test variables change, either at the start or at completion of a test. All the test state variables are contained in the trap PDU, along with the trap counter. This trap alerts the management application that a change has taken place that will probably result in an alarmTrap before too long (in case it doesn't already know, and in case it wants to distinguish between this case and spontaneous alarmTraps). The state variables in the trap PDU include:

- trap counter
- DS3 local loopback
- DS3 remote loopback
- radio loopback
- pseudoAIS
- BERT
- temporary Tx attenuation

Index

A

antennas
- grounding antenna feeders 118
- grounding support structures 118

B

beam clearance
- envelope at midpath 28
- Fresnel zone clearance 26

E

error messages
- monitoring 84

F

Fresnel zone clearance 26

G

grounding
- antenna feeders 118
- buildings 118
- lightning, see lightning protection
- overview 117
- planning 118

I

interWAVE
- return materials authorization (RMA) xiii
- sales operations xiii
- sales support xii
- training xiii

ITU bibliography 120

L

lightning protection
    grounding antenna support structures 120
    importance of 119
    lightning conductors 119
    overview 117
    purposes 119

M

messages
    SNMP monitoring error 84
monitoring and trend analysis
    error messages and traps 84
    Web browser interface
        described 83
        SNMP network management stations 83

N

network management stations, see SNMP

R

Remote routers
    monitoring and trend analysis 83
return materials authorization (RMA) xiii
RMA xiii
RSSI 86

S

sales operations xiii
sales support xii
SNMP
    alarm messages 84
    network management stations 83
    traps 84

T

The "Grounds" for Lightning and EMP Protection 120
training xiii
traps, SNMP 84
troubleshooting 85
    see also RSSI
    using a web browser 86
    using LEDs 86
    using RSSI 86

Notes:

* * * * * * * * * * * * * * * * * *

This is the last page of this document.

This notice complies with ISO9001 requirements

and ensures the reader is working from a complete document.

* * * * * * * * * * * * * * * * * *

Aeras Networks
346 Mathew Street
Santa Clara, CA, USA 95050
Phone: 1.408.844.8470
www.aerasnetworks.com

Part Number MANL-5X-150-001
6/03 Version A