OTA

TEST REPORT

ISSUED BY
Shenzhen BALUN Technology Co., Ltd.

FOR

PCB antenna

ISSUED TO
Shenzhen Guangtai Micro Technology Co.Ltd.

14b, unit 3, building 1, Taoyuan Residential District 17, Xixiang street, Bao'an District, Shenzhen

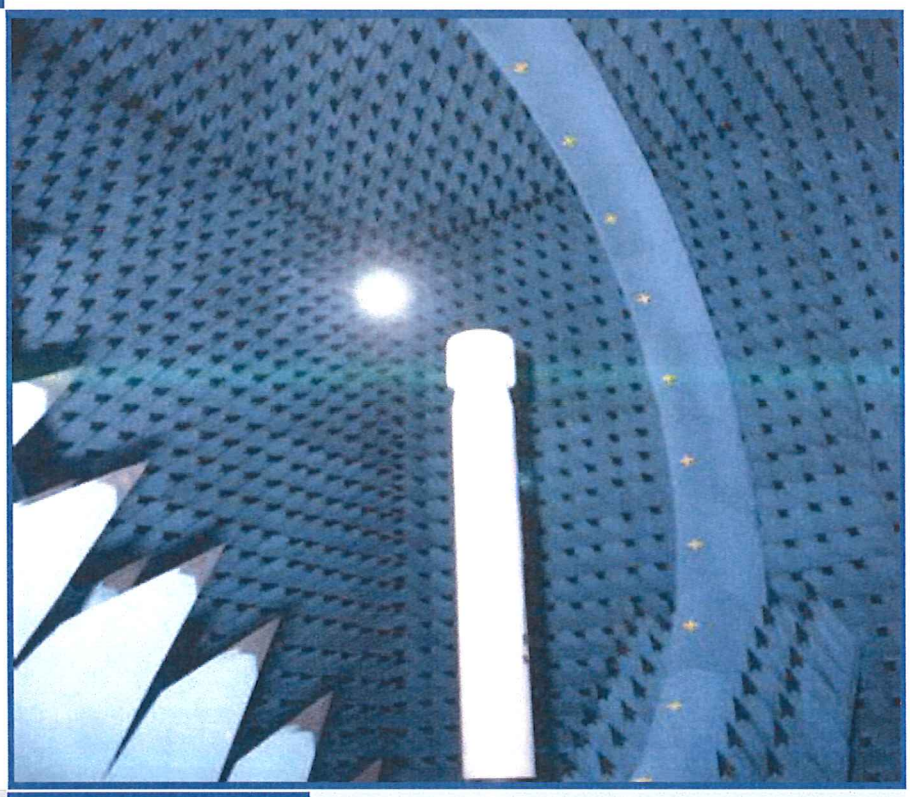

Report No:	BL-SZ2130406-901
EUT Name:	PCB antenna
Model Name:	HS6602
Brand Name:	N/A
Test Standard:	IEEE149-1979
Maximum:	Gain: 2.07 (dBi) Efficiency: 26 %
Test Date:	Mar. 15, 2021
Date of Issue:	Mar. 17, 2021

Tested by: Zong Liyao
Date Mar. 17, 2021

Approved by: Liao Jianming
(Technical Director)
Date Mar. 17, 2021

NOTE: This test report of test results only related to the testing samples, which can be duplicated completely for the legal use with the approval of the applicant; it shall not be reproduced except in full, without the written approval of Shenzhen BALUN Technology Co., Ltd. Any objections should be raised within thirty days from the date of issue. To validate the report, please visit BALUN website.

Block B, 1st FL, Baisha Science and Technology Park, Shahe Xi Road, Nanshan District, Shenzhen, Guangdong, P. R. China 518055
TEL: +86-755-66850100, FAX: +86-755-61824271
Email: qc@baluntek.com
www.baluntek.com

Revision History

Version	Issue Date	Revisions
Rev. 01	Mar. 17, 2021	Initial Issue

TABLE OF CONTENTS

1 Administrative Data (GENERAL INFORMATION) 3

1.1 Identification of the Testing Laboratory 3

1.2 Identification of the Responsible Testing Location 3

1.3 Laboratory Condition 3

1.4 Announce 3

2 PRODUCT INFORMATION 4

2.1 Applicant Information 4

2.2 Manufacturer Information 4

2.3 Factory Information 4

2.4 General Description for Equipment under Test (EUT) 4

2.5 Ancillary Equipment 4

2.6 Technical Information 4

3 SUMMARY OF TEST RESULTS 5

3.1 Test Standards 5

3.2 Test Verdict 5

3.3 Test Uncertainty 5

4 GENERAL TEST CONFIGURATIONS 6

4.1 Test Condition 6

4.2 Test Equipment List 6

4.3 Test Setup 6

ANNEX A TEST RESULTS 7

A.1 Gain and Efficiency 7

ANNEX B RADIATION PATTERN 8

ANNEX C TEST SETUP PHOTO 11

ANNEX D EUT PHOTO 12

1 Administrative Data (GENERAL INFORMATION)

1.1 Identification of the Testing Laboratory

Company Name	Shenzhen BALUN Technology Co., Ltd.
Address	Block B, 1st FL, Baisha Science and Technology Park, Shahe Xi Road, Nanshan District, Shenzhen, Guangdong Province, P. R. China
Phone Number	+86 755 6685 0100

1.2 Identification of the Responsible Testing Location

Test Location	Shenzhen BALUN Technology Co., Ltd.
Address	Block B, 1st FL, Baisha Science and Technology Park, Shahe Xi Road, Nanshan District, Shenzhen, Guangdong Province, P. R. China
Description	All measurement facilities used to collect the measurement data are located at Block B, FL 1, Baisha Science and Technology Park, Shahe Xi Road, Nanshan District, Shenzhen, Guangdong Province, P. R. China 518055

1.3 Laboratory Condition

Ambient Temperature	19℃ to 25℃
Ambient Relative Humidity	45% to 55%
Ambient Pressure	100 kPa to 102 kPa

1.4 Announce

(1) The test report reference to the report template version v2.2.

(2) The test report is invalid if not marked with the signatures of the persons responsible for preparing and approving the test report.

(3) The test report is invalid if there is any evidence and/or falsification.

(4) The results documented in this report apply only to the tested sample, under the conditions and modes of operation as described herein.

(5) This document may not be altered or revised in any way unless done so by BALUN and all revisions are duly noted in the revisions section.

(6) Content of the test report, in part or in full, cannot be used for publicity and/or promotional purposes without prior written approval from the laboratory.

(7) The laboratory is only responsible for the data released by the laboratory, except for the part provided by the applicant.

2 PRODUCT INFORMATION

2.1 Applicant Information

Applicant	Shenzhen Guangtai Micro Technology Co.Ltd.
Address	14b, unit 3, building 1, Taoyuan Residential District 17, Xixiang street, Bao'an District, Shenzhen

2.2 Manufacturer Information

Manufacturer	Shenzhen Guangtai Micro Technology Co.Ltd.
Address	14b, unit 3, building 1, Taoyuan Residential District 17, Xixiang street, Bao'an District, Shenzhen

2.3 Factory Information

Factory	N/A
Address	N/A

2.4 General Description for Equipment under Test (EUT)

EUT Name	PCB antenna
Model Name Under Test	HS6602
Antenna Type	PCB Antenna
Dimensions	12mm*6mm

2.5 Ancillary Equipment

N/A

2.6 Technical Information

Frequency Range	2402MHz ~ 2480MHz
Test Frequencies	2402MHz, 2404MHz, 2406MHz, 2408MHz, 2410MHz, 2412MHz, 2414MHz, 2416MHz, 2418MHz, 2420MHz, 2422MHz, 2424MHz, 2426MHz, 2428MHz, 2430MHz, 2432MHz, 2434MHz, 2436MHz, 2438MHz, 2440MHz, 2442MHz, 2444MHz, 2446MHz, 2448MHz, 2450MHz, 2452MHz, 2454MHz, 2456MHz, 2458MHz, 2460MHz, 2462MHz, 2464MHz, 2466MHz, 2468MHz, 2470MHz, 2472MHz, 2474MHz, 2476MHz, 2478MHz, 2480MHz

3 SUMMARY OF TEST RESULTS

3.1 Test Standards

No.	Identity	Document Title
1	IEEE149-1979	IEEE Standard Test Procedures for Antennas

3.2 Test Verdict

Report Section	Description	Remark
ANNEX A.1	Gain and Efficiency	--
ANNEX B	Radiation Pattern	--

3.3 Test Uncertainty

The uncertainty is calculated using the methods suggested in the "Guide to the Expression of Uncertainty in Measurement" (GUM) published by ISO.

Item	Uncertainty
VSWR(S11)	±0.2
Gain	±0.5dB

4 GENERAL TEST CONFIGURATIONS

4.1 Test Condition

Environment Parameter	Selected Values During Tests			
	Ambient Pressure(KPa)	Temperature(℃)	Voltage	Relative Humidity (%)
Normal Temperature, Normal Voltage (NTNV)	100 to 102	19 to 25	N/A	45 to 55

4.2 Test Equipment List

Description	Manufacturer	Model	Serial No.	Cal. Date	Cal. Due
Vector Network Analyzer	Agilent	E5071C	MY46103472	2021.01.26	2022.01.25
SG24 Multi-probe Antenna Measurement System	SATIMO	SG24-L	1101855-0001	2020.06.22	2021.06.21

4.3 Test Setup

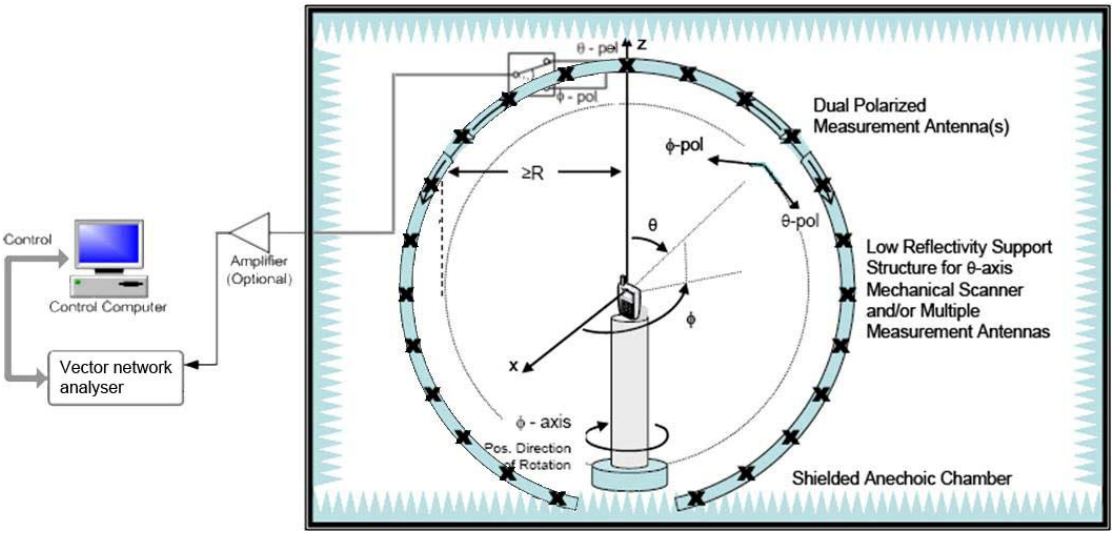

ANNEX A TEST RESULTS

A.1 Gain and Efficiency

Frequency	Gain (dBi)	Efficiency (%)
2402MHz	1.68	26
2404MHz	1.67	25
2406MHz	1.57	25
2408MHz	1.58	25
2410MHz	1.59	25
2412MHz	1.56	24
2414MHz	1.50	24
2416MHz	1.47	24
2418MHz	1.42	24
2420MHz	1.36	23
2422MHz	1.32	23
2424MHz	1.33	24
2426MHz	1.55	24
2428MHz	1.54	24
2430MHz	1.51	24
2432MHz	1.52	24
2434MHz	1.57	25
2436MHz	1.55	25
2438MHz	1.58	25
2440MHz	1.66	25
2442MHz	1.72	25
2444MHz	1.76	25
2446MHz	1.69	25
2448MHz	1.71	25
2450MHz	1.73	25
2452MHz	1.72	24
2454MHz	1.67	24
2456MHz	1.73	24
2458MHz	1.76	24
2460MHz	1.77	24
2462MHz	1.75	24
2464MHz	1.74	24
2466MHz	1.82	24
2468MHz	1.83	24
2470MHz	1.79	24
2472MHz	1.79	25
2474MHz	1.99	25
2476MHz	2.00	25
2478MHz	2.04	26
2480MHz	2.07	26

ANNEX B RADIATION PATTERN

B.1 3D Pattern

B1.1 3D Pattern for 2402MHz

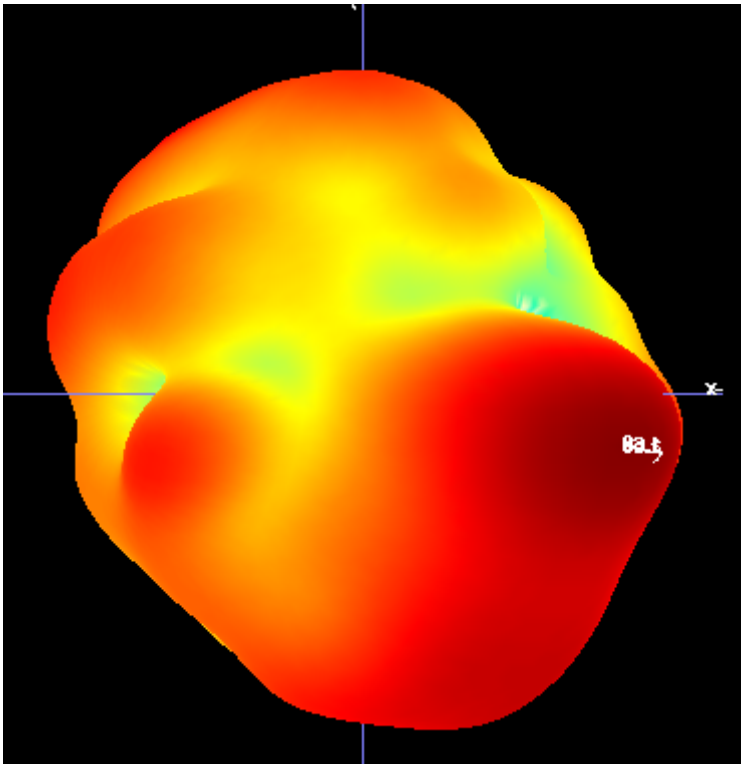

B1.2 3D Pattern for 2440MHz

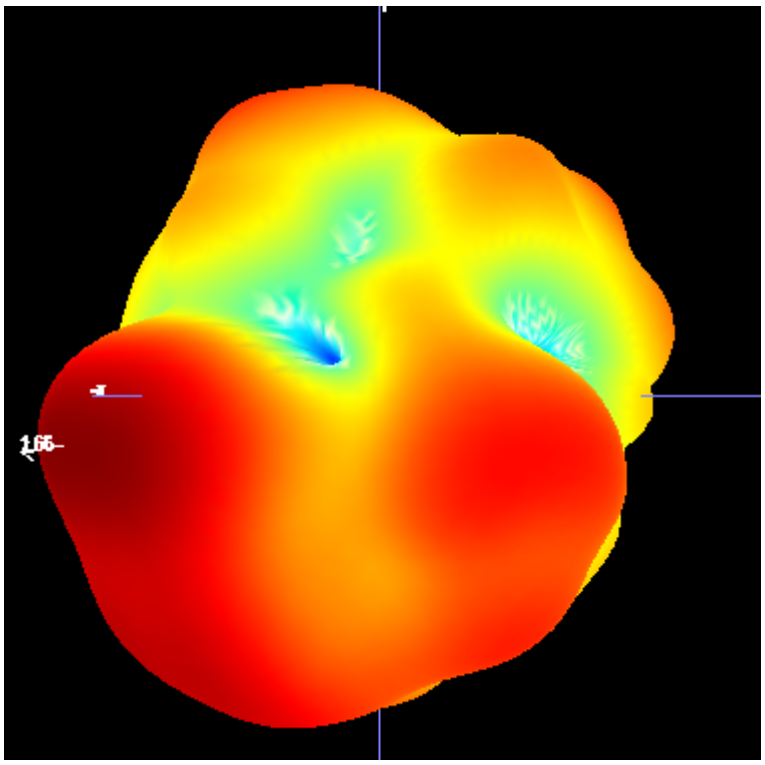

B1.3 3D Pattern for 2480MHz

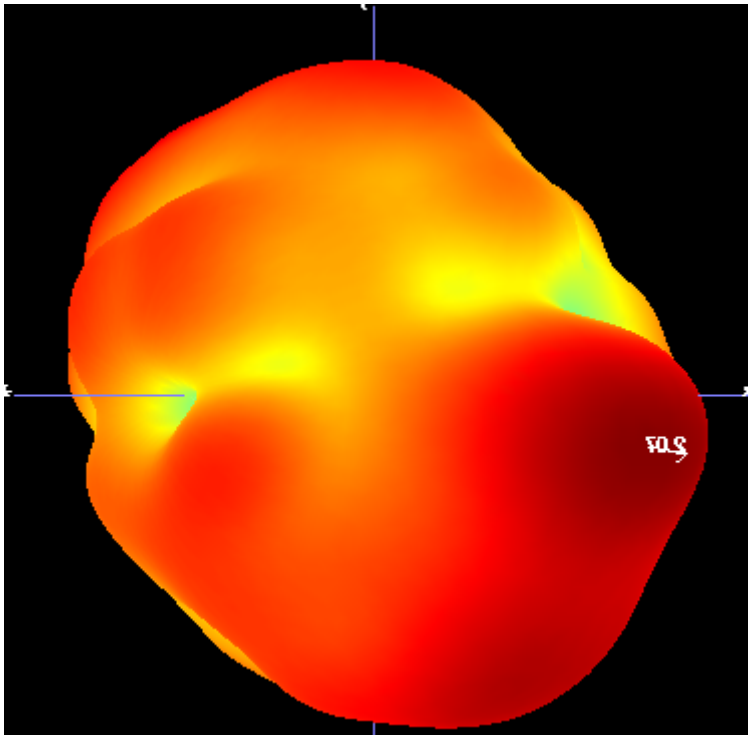

B.2 1D Radiation Pattern

B2.1 PHI=0

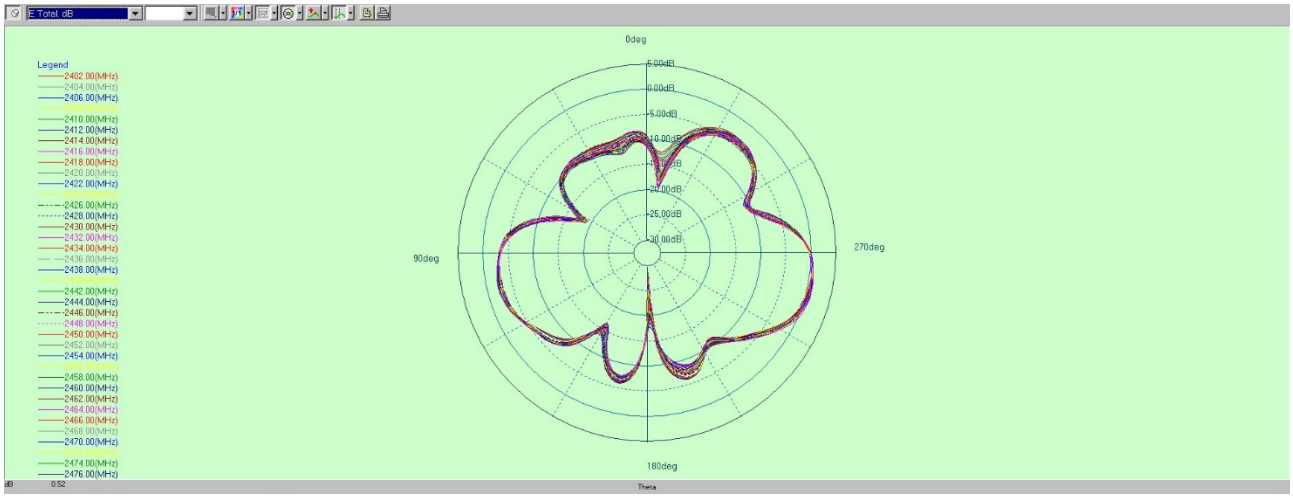

B2.2 PHI=90

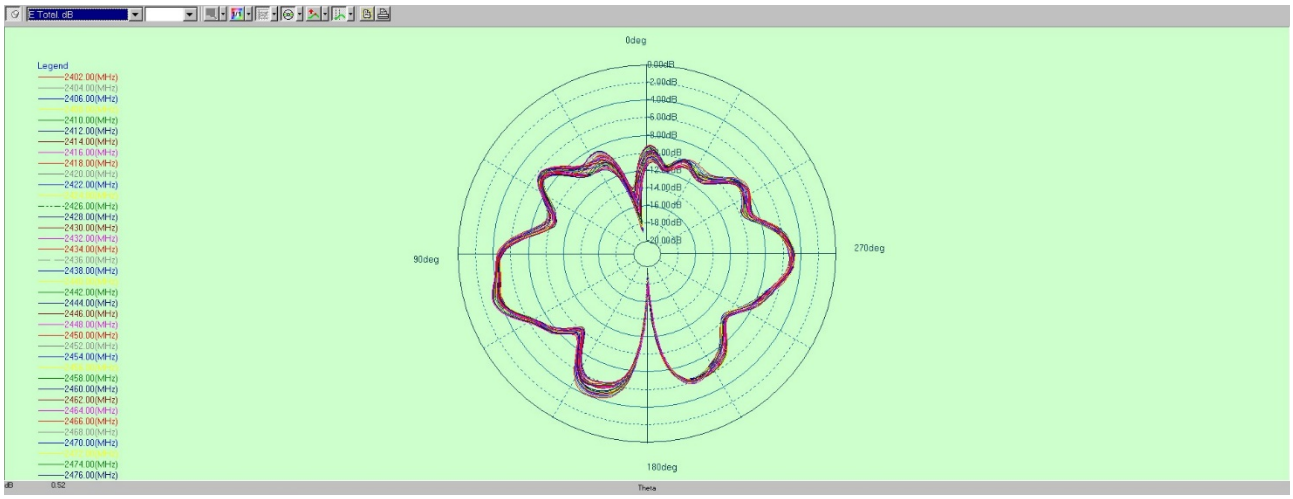

B2.3 THETA=90

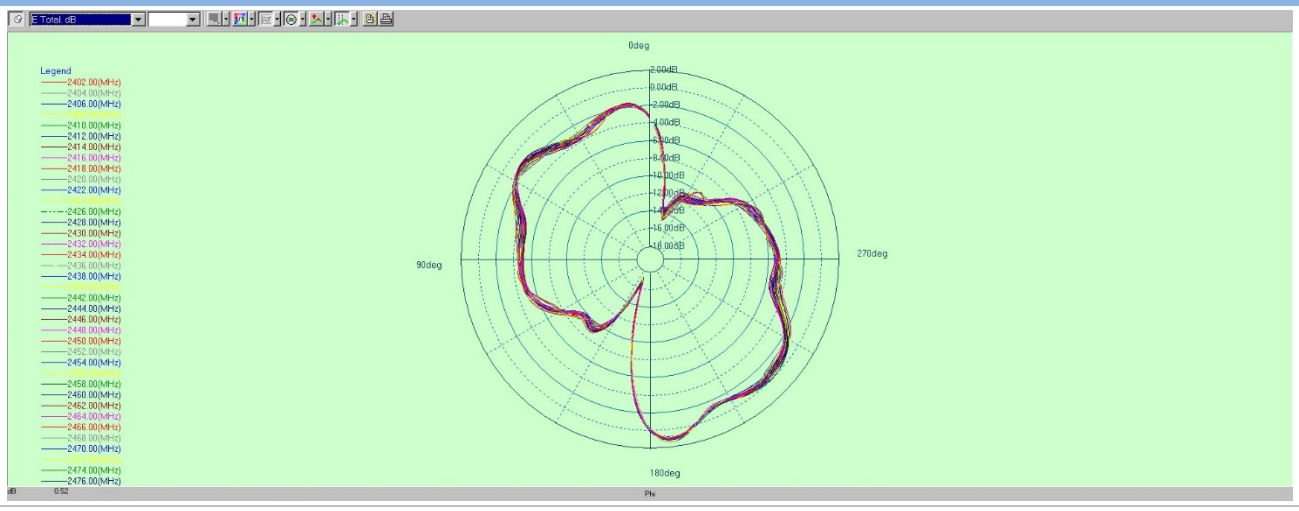

ANNEX C TEST SETUP PHOTO

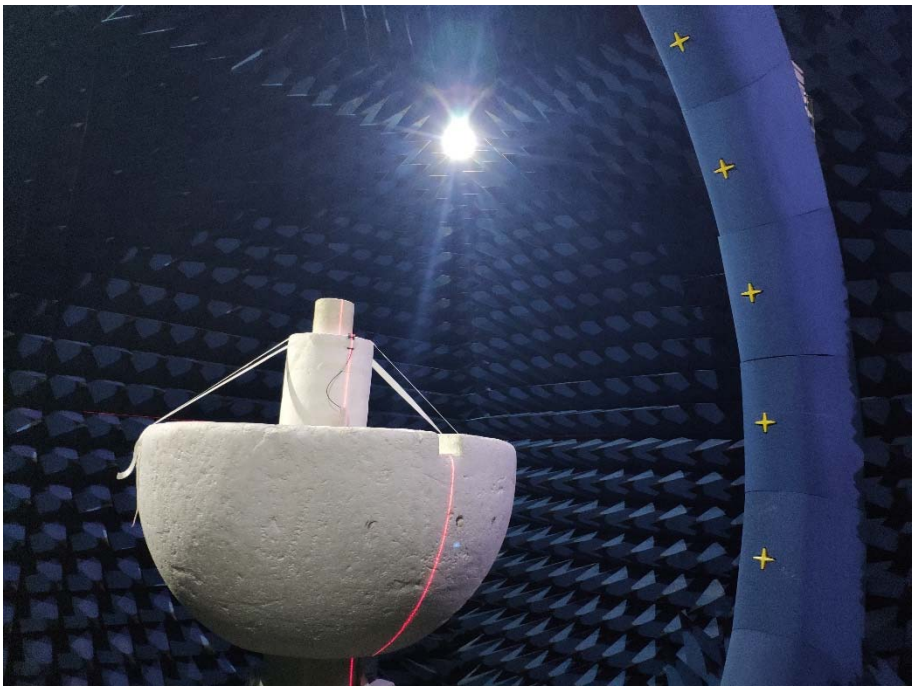

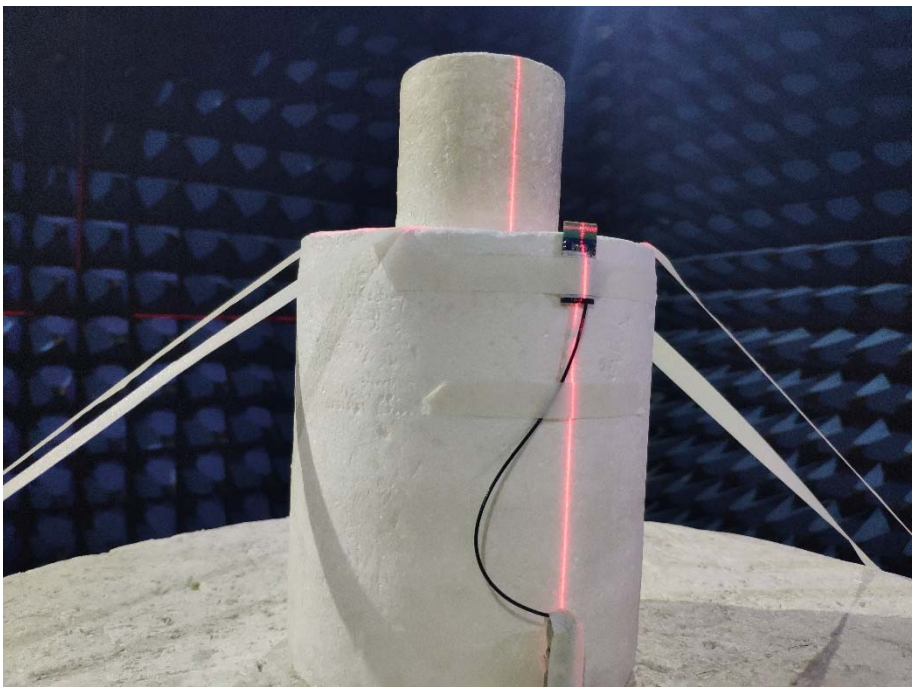

ANNEX D EUT PHOTO

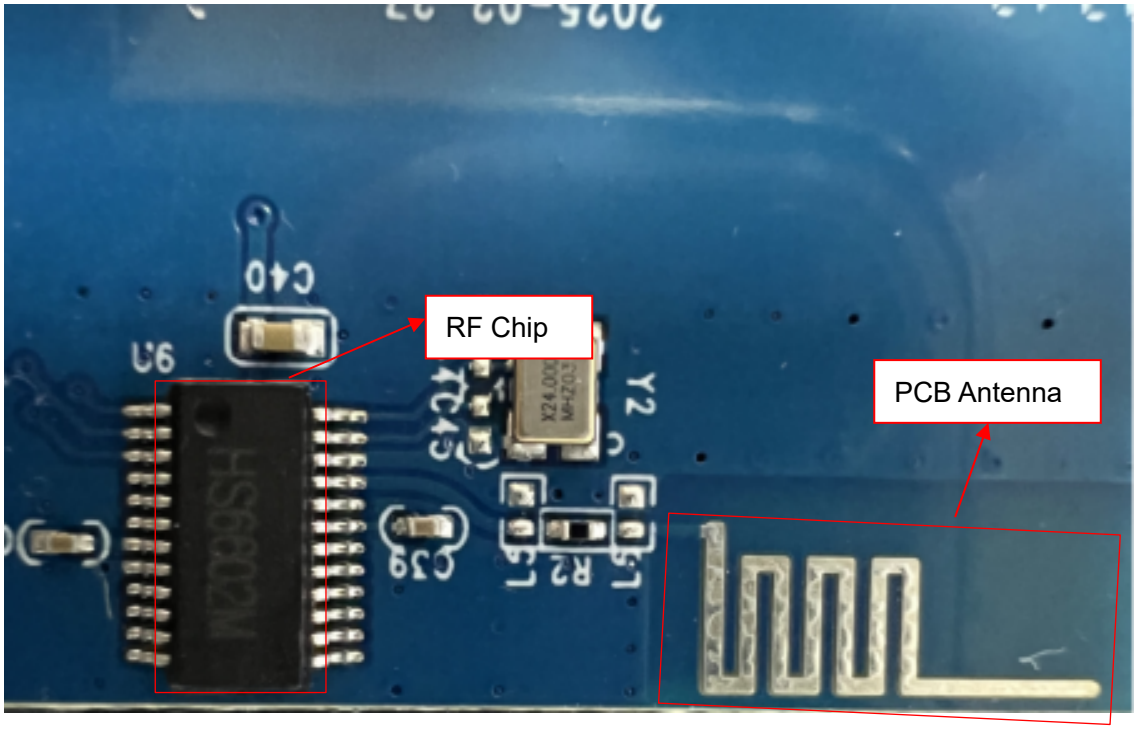

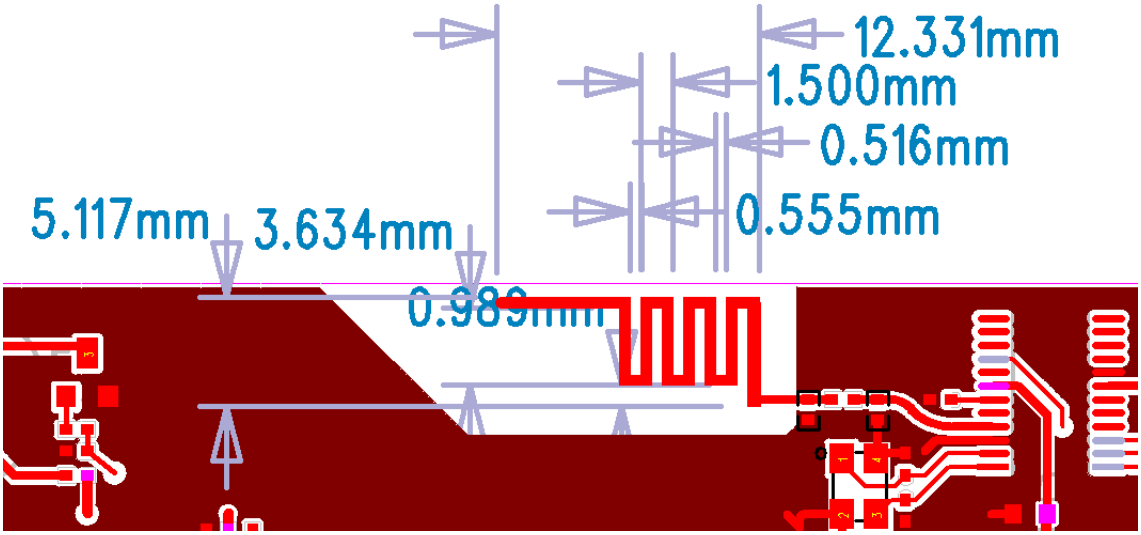

--END OF REPORT--