Portable Thermal Printer

Android/i0S App

Using Tutorials

Instruction manual

Product Information

Product Name	Portable Thermal Printer
Product Size	287*126*68mm
PrintingType	Thermal print
Input Voltage	DC 5V/2A
Li-battery	2600mAh
Paper width	A4
Interface	USB Type-C
Wireless	Bluetooth
Net Weight	1kg

Packing List

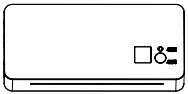

Printer*1 pc

USB*1 pc

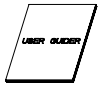

User Manual*1 pc

Appearance Introduction

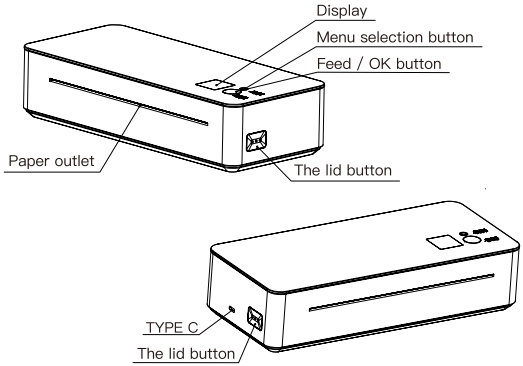

How to open the printer bin

Press the lid button in on both sides of the machine at the same time to open the printer bin.

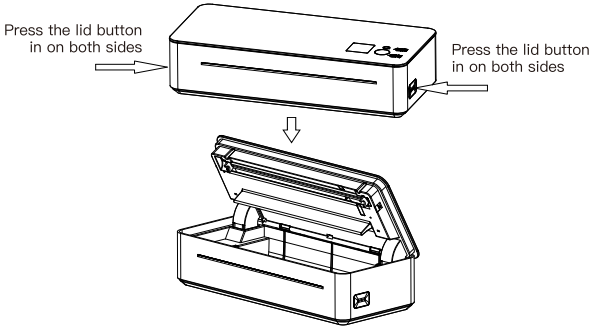

How to load paper

Open the paper bin, put the paper into the paper bin according to the below picture, and pay attention to the front and back of the paper.

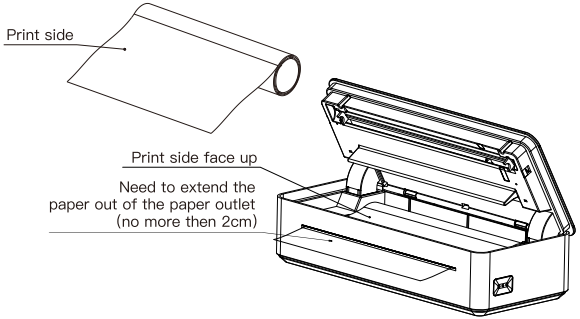

Tutorial for Use

Install Software:

Android OS: Go to Google Play Store to download the app "NIPrt" or scan below QR code.

IOS OS: Go to App Store to download the app "NIPrt" or scan below QR code.

Android/i0S App

If print by PC, please download the printer driver and other tools by below link:

www.cnfujun.com/d/44

FCC Caution:

This device complies with part 15 of the FCC Rules. Operation is subject to the following two conditions: (1) This device may not cause harmful interference, and (2) this device must accept any interference received, including interference that may cause undesired operation.

Any Changes or modifications not expressly approved by the party responsible for compliance could void the user's authority to operate the equipment.

Note: This equipment has been tested and found to comply with the limits for a Class B digital device, pursuant to part 15 of the FCC Rules. These limits are designed to provide reasonable protection against harmful interference in a residential installation. This equipment generates uses and can radiate radio frequency energy and, if not installed and used in accordance with the instructions, may cause harmful interference to radio communications. However, there is no guarantee that interference will not occur in a particular installation. If this equipment does cause harmful interference to radio or television reception, which can be determined by turning the equipment off and on, the user is encouraged to try to correct the interference by one or more of the following measures:

-Reorient or relocate the receiving antenna.

-Increase the separation between the equipment and receiver.

-Connect the equipment into an outlet on a circuit different from that to which the receiver is connected.

-Consult the dealer or an experienced radio/TV technician for help.

The device has been evaluated to meet general RF exposure requirement. The device can be used in portable exposure condition without restriction.