58MM Portable MINI Thermal Printer Instruction Manual

FCC ID: RVUZJ-5802DD

Version

Feb, 2017

Notice

- All rights reserved. Reproduction of any part of this manual in any form whatsoever, without manufacturer's express permission is forbidden.

- The contents of this manual are subject to change without notice.
- All efforts have been made to ensure the accuracy of the contents of this manual at the time of going to press. However, should any errors be detected, manufacturer would greatly appreciate being informed of them.
- The above notwithstanding, manufacturer can assume no responsibility for any errors in this manual

Declaration

We have been carefully handling the manual and trying our best to ensure the accuracy of the contents of this manual. But we still can't promise it is always correct due to our products are being improved and updated all the time. The contents of this manual will be updated without notice at any time.

All of our products must be used under environments/locations which are taken care by human being. We are not responsible for any loss or damages caused by any accident while the products are used without taken-care by human being. If there are any products failures caused by human behaviors or natural disaster, we will not provide or just provide partial free maintenance.

Please contact local agents for the latest information of the products.

Notes on safety

This section presents important information intended to ensure safety and effective use of the printer. Please read carefully.

- Be sure to use the specified battery and power source provided by our company. Connection to an improper power source may cause fire, explosion or damage to the printer.
- Don't put the battery into the fire or water, don't disassemble or modify the battery, don't be short circuit, otherwise may result in injury or fire even explosion.
- If the printer would not be used for a long time, be sure to take off the battery, otherwise the battery may leak the corrosive liquid out, if improper operation causes battery leak, and the liquid is spattered on the skin or clothes, please wash it with water immediately, if spattered in the eyes, please rinse them with water thoroughly and see a doctor.
- Please don't open the paper room cover when it is printing or just when printing is over, do not touch the print head with hand or body, overheat may cause scald.

Notes on using

1、 Do not store the printer in hot and humid conditions.

2.、 The lithium battery have a character that if it is not used for several months, it possibly can't be charged ever.

3、 The printer's power adapter is to be connected to a stable power 110~220 Volts, please do not use other devices on the same power socket, to avoid voltage fluctuations.

4、 Avoid water or conductive material (for example: metal). If water is present on the surface please turn off the power immediately.

5、 Please ensure that a thermal paper roll is always inserted in the printer to avoid damaging the printing roller and the printer head.

6、 Please ensure that your printer is serviced and repaired by a qualified technician. No responsibility is taken for misuse and/or non-qualified servicing.

7、The power adapter that comes with this printer is specifically designed to be only used with the printer, please do not use an alternative power adapter.or use 9V-2A The standard power adapter.

8、In order to ensure print quality and longevity of your printer, please ensure that only good quality thermal paper rolls are used.

9、Please keep this manual in a safe place, where it can be accessed easily and used for your reference.

1.Features & Application area

一. Features

- It can print 58mm width thermal paper
- High-speed,Clear printing
- Super power lithium electricity, standby time can reach 5-6 days
- Auto sleep, auto awake, save electricity
- Small size、light weight、reliable performance、simple to connect、easy to use

二. Application area

Relative to the traditional thermal receipt printer, Mini portable printer has smaller body, more reliable capability, more convenient printing and portable advantages. The Mini printer can be worked on a lots of locations, such as the TAXI bill printing, administrative fees receipt printing, post receipt printing, restaurant ordering information printing, online payment information printing, etc. With the rapid popularity of smart-mobile, Mini printer will be more widely used in the near future.

2.Specification

PrintingMethod: Direct Thermal

Speed:≤90mm/sec

Reliability TPH Life: 100km

Resolution: 203DPI (8dot/mm)

Printing Width: 48mm (384dot)
Paper Width: 58±01mm
Roll Diameter: φ≤40mm
Paper Type: Thermal Paper
Power: rechargeable lithium battery/NI-MH battery
Battery: 7.4VDC, 1500mAh
Charging mode: DC 9V/1.5A
Print parameters: support to download the Logo trademark, support bar-code print.
Support bar-code types: UPC-A / UPC-E / JAN 13 (EAN13) / JAN8 (EAN8) / CODE39 / ITF / CODABAR / CODE93 / CODE128 ; Two-dimensional code: QR CODE
Character size: 384 dots/line
FontA:12*24dots,1.5(W)*3.0(H)mm
FontB: 9*17dots, 1.1(W)*2.1(H)mm
FontC: 9*24dots, 1.1(W)*3.0(H)mm
Simplified/Traditional:24*24dots,3.0(W)*3.0(H)mm
Printing Chinese character: Chinese: simplified Chinese 24x24 point. support GB18030 font library, support Taiwan and HK traditional(complex font)
ANK: ANKcharacters
Language: support for multiple languages
(Support Traditional, Korean, Japanese, etc. must be instructed before purchased)Extended character table:
OEM437/Katakana/OEM850/OEM860/OEM863/OEM865/West Europe/Greek /Hebrew/EastEurope/Iran/WPC1252/OEM866/OEM852/OEM858/IranII/ Latvian/Arabic/PT1511251/OEM747/WPC1257/Vietnam/OEM864/Hebrew/ WPC1255/Thai

Emulation: ESC/POS command
Interface: standard RS232/USB, Bluetooth 3.0&4.0(option)/SPP agreement or infrared/IRCOMM agreement (optional)/Android up to 4.0 operation system. Driver: Win2003/Win2000/Win7/WinXP/VISTA/WIN8/Win10/LINUX
Working Temperature: -10～50℃ ; Humidity: 10～90%

3.Appearance

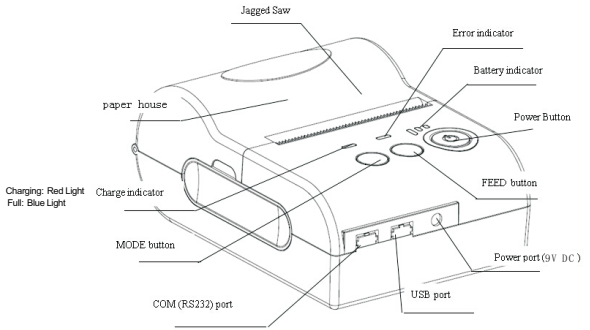

Model:5801
Size:103*75*46mm
Weight:134g(without battery)

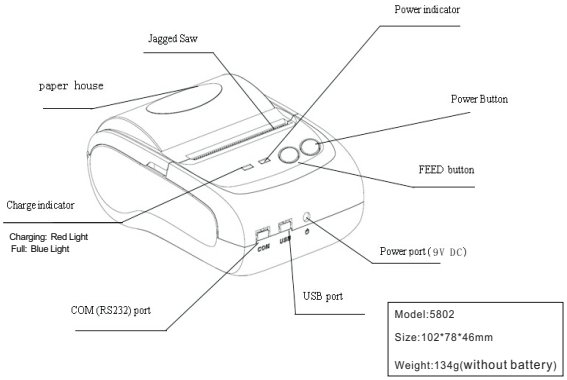

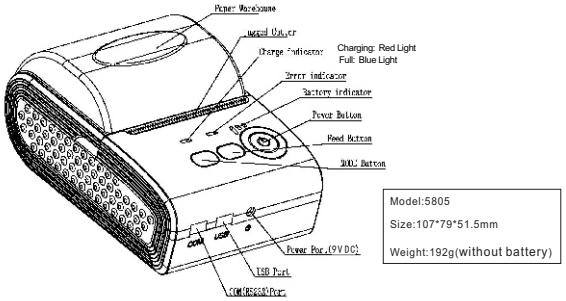

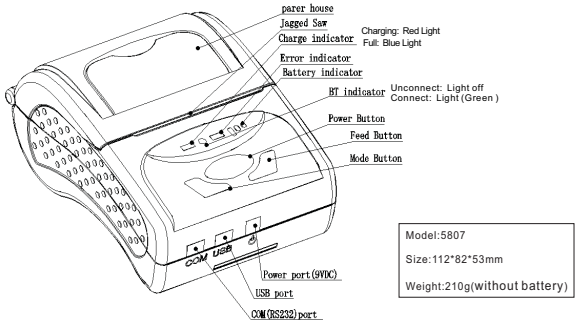

4.Communication Interface

- 1. RS232(COM)：standard RS232 Communications Protocol
- 2. Bluetooth 3.0/4.0：standard Bluetooth 3.0/4.0 Communications Protocol
- 3. USB：standard USB Communications Protocol

4-1. RS-232 Serial (COM) Interface

RS-232 is developed according to the EIA standard asynchronous transmission, the specifications are as following:

Data transmission: serial interface

Synchronization: asynchronous

Signal Level: RS-232 level, logic 1:-5.4v, logic 0 : +5.4v

Hardware Flow Control: None

Baud rate: 2400pbs to 115200pbs is optional

Data word length: 8 bits

Stop bit: 1bit

Parity: None

Users can get the current baud rate from the printer self-testing page.

Serial cable: We have made the cable specially using mini port like Mini USB port which connects the printer .The following picture shows the signal definition of the RS-232 Serial interface:

The connection between the printer and host follows the following rules:

Printer	Host
TXD	RXD
RXD	TXD
GND	GND

However, the printer usually works only on receiving data, it doesn't have to respond anything back to the host , then TXD signal can be ignored , and then the connection can be sampled as following:

Printer	Host
RXD	TXD
GND	GND

4-2. Bluetooth Connection

Bluetooth is a proprietary open wireless technology standard for exchanging data over short distances (using short-wavelength radio transmissions in the ISM band from 2400–2480 MHz) from fixed and mobile devices,creating personal area networks (PANs) with high levels of security.

4-2-1. Bluetooth specification

Using blueCore4-Ext chipset, fully compatible with Bluetooth 3.0;

High-sensitivity receive signal, small size, lower consumption

Supporting 1200bps ~ 1382400bps variety of baud rate;

Supporting SPP agreement, the maximum transfer speed is up to 3Mbit / s;

4-2-2. Use " AT " command to modify Bluetooth Module ' s parameters

Notice: The following changes can't be done by user, these should be done in factory by Manufacturer. So if user wants to change these parameters, please inform our sales person before ordering our printers.

Modify name---Send character string "AT+NAMEXXXX, feedback "Okname";

For example, if you want change name to "Bluetooth Printer", please send string "AT+NAME Bluetooth Printer".

Modify PIN code--- Send character string "AT+PINXXXX, feedback "Oksetpin";

For example, if you want change PIN code to "8888", please send string" AT +PIN8888".

(Note: Default PIN code is “1234”, you only can reset PIN code with four figures.)

Clear Bluetooth address--- Send character string “AT+CLR00”, feedback “Okclear”;

Modify baud rate--- Send character string “AT+BAUDX, feedback “Ok+ current baud rate”; X represents the baud rate code, as following:

1-----1200	7------ 57600
2----- 2400	8------ 115200
3----- 4800	9------ 230400
4----- 9600	A------ 460800
5----- 19200	B------ 921600
6------38400	C------1382400

For example, if you want to change baud rate to 115200bps, please send string “AT+BAUD8”.

4-2-3. Build connection.

1. Turn on the printer;
2. Search for the Bluetooth device with host device;
3. If there are other Bluetooth devices, please select “LY58”(for example) printer;
4. Enter default pairing code “1234”
5. Pairing succeed.

4-3. USB Interface

The printer is connected by standard Mini USB cable(included in accessories) for communication. The USB type belongs to slave device type.

5.The installation of the paper roll

The printer use 58MM thermal paper, and adopt to easy paper loading. So the paper is very convenient install.

Paper diameter Max 40mm.

Thermal paper installation method is as follows:

（1） Open the printer top cover

（2） Thermal Paper as follow Graph to put into paper storehouse

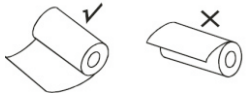

（3）Put out a little of the paper outside printer,then close the top cover.

（4）Use paper sawtooth tear off redundant paper

Button Operating Instructions

POWER（Blue Light）	FEED（Red Light）	Printer Status
OFF	OFF	Printer Close
ON（Always）	OFF	Printer open and have paper
ON(Always)	Flash	Printer Open , without paper
Under the normal working status, the paper feeding begins when press【FEED】button, and stop when loosen【FEED】 button.		The printer paper feed
Power off the printer, then hold down the【FEED】button and press the power button at the same time. Wait 2 seconds ,then loosen the【FEED】button,the current setting will be printed out.		The printer Self test
Power off the printer, then hold down the【FEED】button and press the power button at the same time. Wait until the power indicator &【ERROR】led are both on, and then 【ERROR】led goes off, then loosen the【FEED】button, the language setting status will be printed out.		Transformation in both English and Chinese

Power off the printer, then hold down the【FEED】button and press the power button at the same time. Wait until the power indicator &【ERROR】led are both on, and then 【ERROR】led goes out, after, 【ERROR】led goes on again ,then loosen the【FEED】button, the density setting status will be printed out. (It has three levels setting for printing density, it is a circle Low level→Middle level→High level →Low level…, Please switch the density status by repeating operation presented above.)	Set printing density
Power off the printer, hold down the【MODE】button and press the power button at the same time. Wait until the power indicator &【ERROR】led are both on, and then 【ERROR】led goes	Hexadecimal printing
out, then loosen the【MODE】button. The printer turns into the hexadecimal printing mode and print the presentation.Way to quit hexadecimal printing : The way to quit hexadecimal printing mode is switch off the printer .	

6.Operating Manual for Android OS

This manual applies to all of our android OS compatible printers (both 58mm & 80mm width printer)Currently, the common communication ports we used for android OS are (USB、Ethernet、Bluetooth)

If you want to use Android Device connected with our printer, first of all make sure that printers can be supported Android Operate System, proceed as follows (Bluetooth as example):

Step 1:

- Insert the CD driver disc into the CD-ROM, connect your Android device with your computer;

Step 2:

- Find the File Named " SDK" from the CD driver, Then follow the path : " Android SDK---BLUETOOTHDEMO ----bin----BT-POSPrinter.APK " , and install it into your Android device.

Step 3:

- Connect your Android device with our printer once the installation done .

Step 4:

- Find this icon on the Android device, and click "Connect Printer" to search the Bluetooth printer, (Default pairing password for Bluetooth connection is " 1234") . After the connection successfully, click on the "Print Test Page", the printer will work

If you use the "Ethernet interface", "USB" communication, replace " BLUETOOTHDEMO" from "Step 2" into the corresponding "NETDEMO", "USBDEMO" . Please noted, the customers can get all the original code from below path if you need to develop your own APK (Path is: src ▸ com ▸ zj ▸ printdemo)

.

7.Operating Manual for IOS APP

1. Download the Test Tools "POS-PrinterV1.0" from App Store,as below:

(Image 1)

2. Turn on the Bluetooth setting of IOS device , then click “POS-Printer”:

3. Into the App of “POS-Printer”, select the paper width as below:

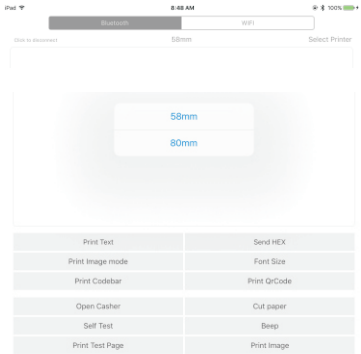

（Image 3）

4. Select the way of communication of printers, “Bluetooth” :

5, If connect with Bluetooth, then you can click “ Select Printer” first, you will search the “Bluetooth Printer” (the default name of printer is Bluetooth Printer), click it to be connected.

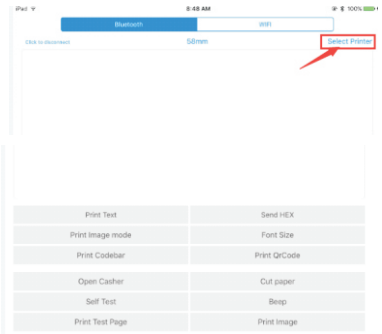

6, If above steps are successful, then you can print text to have a test:

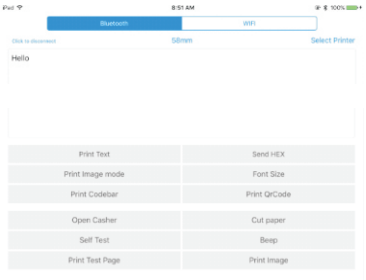

7, Other features of this APP:

① Send HEX: In the text box, enter the hexadecimal data, click “Send HEX”, then can send text box hexadecimal data to the printer.

② Print Image mode: input data in the text box, click "Print Image mode", you will be able to convert the contents of the text box into a image printed

③ Open Casher: If your printer is connected with the cash drawer, click "open casher", the drawer will be opened (portable printers without drawer interface, this feature does not work).

④ Cut paper: After click on it, the paper will be feed out and cut (portable printers, 58 series of printers without cutter, this feature does not work).

⑤ Self Test: Click the "self-test", the printer will print out a self-test page (because the Bluetooth printer has been connected to the device, then the Bluetooth name or MAC address will be not displayed in the self-test page).

⑥ Beep: Click the "Beep", the printer will beep sound (portable printers, 58 series of printers without buzzer, this feature does not work).

⑦ Print test page: Click the "Print Test Page", the text will print a section of the test, to confirm that the printer

9.The applicable version: can be compatible with IOS6.0 or above versions.

8.The Bluetooth configuration

Step1: Make sure your device (like PC, Note Book) has Bluetooth function, then once the Bluetooth for your device is activated, you will see the Bluetooth sign showed in the right bottom side of your device(like PC) screen.

Step2:Power on the Bluetooth printer.

Step3:To add the Bluetooth printer, please left-click the → click "Add a Bluetooth Device" ,then you will enter wizard screen , please choose "My device is set up according and ready to be found"click "Next"(showed as below).

Step4:if you can see screen as below,then the device is searching the bluetooth printer,please wait.

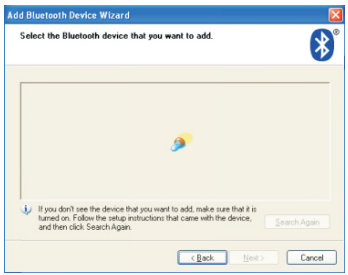

Step5:Once the Bluetooth printer is found. You can see it listed on the screen, click “Next”

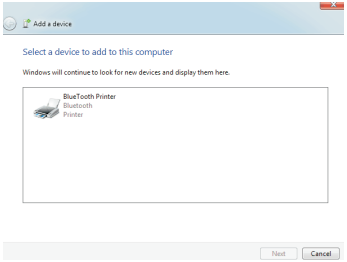

Step6:Choose “Let me choose my own passkey”, then enter “1234” (this is factory default passkey, if you want to change it, you have to inform us to set the new passkey for you in our factory before shipping), then click “Next”.

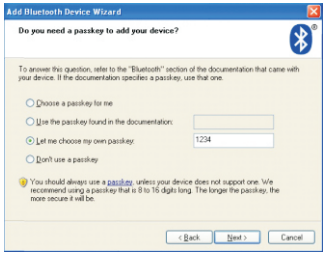

Step7:if you can see the screen as below, that means the Bluetooth printer is already connected. Please notice the assigned COM ports ,then Click”Finish”.

（Note: The Bluetooth device will automatically assign a COM port.)
Step8: Now if you want to test if the printer is OK to print, you could use a com tool , and send printed data to Outgoing COM port(just as above image shown: COM5).
(Com tool setting is 9600,N,8,1.)

9. USB port to be used

1.Insert the CD-ROM,click on the file(58/80 series printer driver software)to star to installation ,select the language appears as you need to install the driver,as shown below:

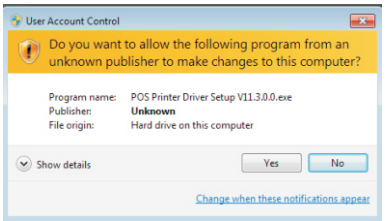

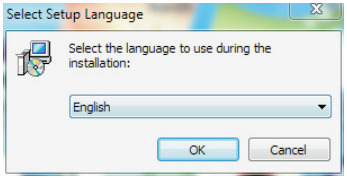

2.Then select the language click “OK”,as shown below ,click”Continue”to next step.

3.please read the following License Agreement ,accept and continue the installation , as shown below:

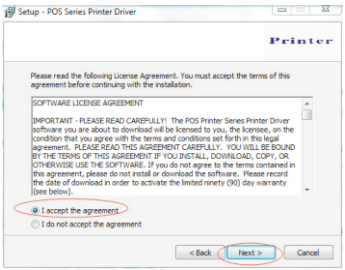

4.Click :Next”after the operation in the below figure(Customer can also modify the path of the driver can choose the default installation path)

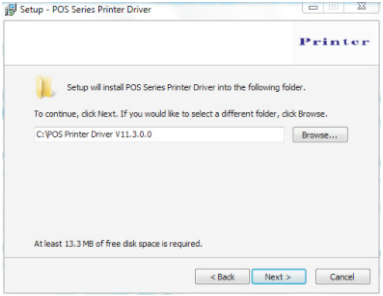

5.Then click”Next”after the operation as shown below ,choose “install”, if you computer has antivirus software ,appears to block the installation of the windows allow this operation.

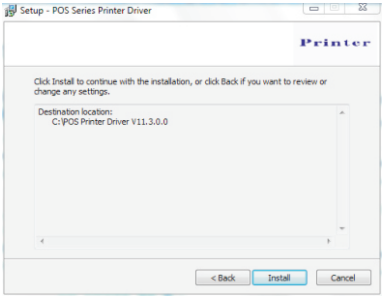

6.Wait for the installation interface appear as follows after the completion , choose your computer's operating system ,then select the printer model (POS58 series printer),if you use a USB interface to communicate , click "USB Port Check"automatically recognize the computer USB port ,click Next to continue ,as shown below:

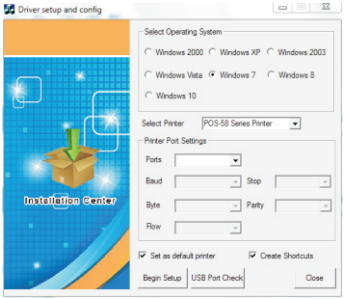

7.Click Begin Setup ,as shown below appears ,select "install"or " install this driver software anyway"

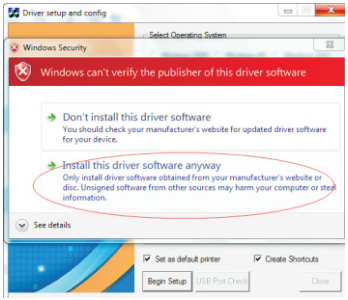

8.Completing the driver installation ,as shown below:

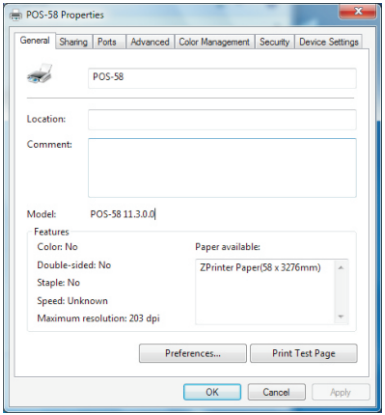

If the printer prints a normal page, then it shows that the work was successful.
Note: If the printer prompts "Print Error", please return to the "port" option from the "USB001" started trying to choose

10. Serial (COM) port to be used

1. Open the Printer Properties screen, and then select the "Port" item, as shown below:

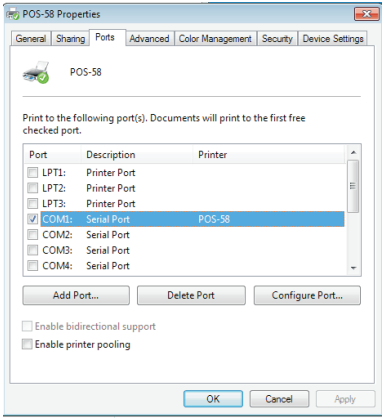

2.Select the list of ports "COM1" → "Configure Port", the printer factory default settings as shown below:

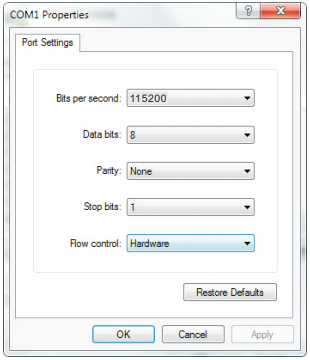

You can see the setting parameters of serial port from self-test page, Click "Apply", then click "OK" (Note: This setting must consistent with the setting parameters of serial port from the printer self-test page, otherwise it will be garbled case) appears as shown below:

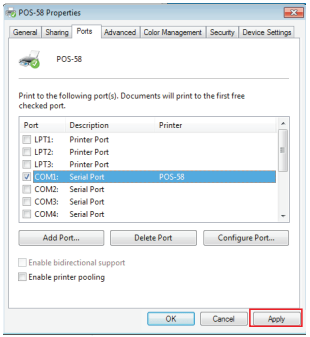

Click "Apply" again.

3.Return to the "General" tab, click "Print Test Page" as shown below:

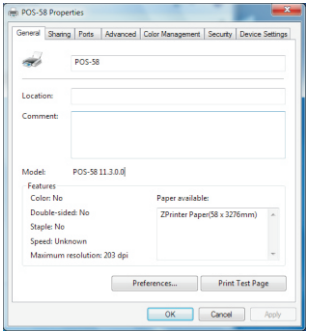

If the printer prints a normal page, then it shows that the work was successful.

If you feel the print speed is slow, please click on the "Device Settings" → "Print Mode" → Choose "soft font" button as shown below:

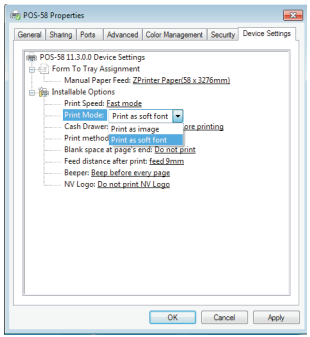

11.Cleaning of printer head

Cleaning of printer

When the printer has the following conditions, you should clean the printer head:

① The printer does not print clearly and the thermal paper is Ok.

② The printer Print pages lengthways is not clear

③ It's getting too noisy while feeding paper or printing.

Printer head cleaning steps are as follows:

1. Power off the printer and open the paper room cover. Remove the thermal paper roll.
2. If the printer just finished printing , please wait for the print head to cool down.
3. With a soft cotton cloth dipped in ethanol (please make sure there is no dripping), wipe the thermal printer head gently and remove any dust or stains.
4. Wait for the complete evaporation of any ethanol, then place the thermal paper roll back in the printer and close the paper room cover, then print a test page.

Notes :

- When the printer maintenance must ensure that the power is shut down
- Hands or other metal tools away from the surface of the printer head, do not use tweezers to scratch the surface of the printer head and other sensitive parts.
- Do not use gasoline, acetone and other organic solvents for printer head cleaning.

12.General Troubleshooting

1: Why serial port printer printing messy code?

A: Ensure the baud rate setting in the PC is same as the printer baud rate. (we can see printer baud rate from self test page)

2: Self printing test is ok,but printer does not work after driver installation.

A: Recheck the installation according to above installation wizard and see if we selected the right port or ask service center for advice if needed.

3: Malfunction of paper feeding?

A: Use soft brush to clean the paper sensor and try again or send it to the service center for repair.

4. Malfunction of the indicator light

A: Check the cable connecting way / adapter / power cord / switch on or off? Or contact the service center for repair.

5. Messy code printing except Arabic numeral printing.

A: language switching incorrectly, please use our tool "IPrinter" (you can find it on the enclosed CD) to change the language what you want print.

6. Red indicator keep flashing during the printing.

A: Usually it is due to the high temperature of the print head. If printing stopped, please contact the service center for repair.

7. Printing speed is very slow for serial printer

A: follow this path and change the set accordingly : Driver -- Properties -- Device Settings -- Print Mode -- Print as soft font.

8. Water or other liquid spills into the printer

A: Cut off the power,we can dry the main board or printer head with a hair dryer, careful of the temperature (average 50 degree is ok)

9. The printer can't work

A : The battery maybe without electricity, please use power adapter to charge. Then you try to star the printer, if the printer has same problem, please send to service center for repair.

10. Can not search the Bluetooth printer

A : Please check the equipment "Bluetooth" function whether opened, the communication whether normal, then replug the printer "Bluetooth Module" try to connect and search “Bluetooth” again, if the problom are still existed, please send the specified location repair.

FCC warnings:

Changes or modifications not expressly approved by the party responsible for compliance could void the user's authority to operate the equipment.

This device complies with Part 15 of the FCC Rules. Operation is subject to the following two conditions: (1) this device may not cause harmful interference, and (2) this device must accept any interference received, including interference that may cause undesired operation.

This equipment has been tested and found to comply with the limits for a Class B digital device, pursuant to Part 15 of the FCC Rules. These limits are designed to provide reasonable protection against harmful interference in a residential installation. This equipment generates, uses and can radiate radio frequency energy and, if not installed and used in accordance with the instructions, may cause harmful interference to radio communications. However, there is no guarantee that interference will not occur in a particular installation.
If this equipment does cause harmful interference to radio or television reception, which can be determined by turning the equipment off and on, the user is encouraged to try to correct the interference by one or more of the following measures:
-- Reorient or relocate the receiving antenna.
-- Increase the separation between the equipment and receiver.
-- Connect the equipment into an outlet on a circuit different from that to which the receiver is connected.
-- Consult the dealer or an experienced radio/TV technician for help.

This modular complies with FCC RF radiation exposure limits set forth for an uncontrolled environment. This transmitter must not be co-located or operating in conjunction with any other antenna or transmitter.