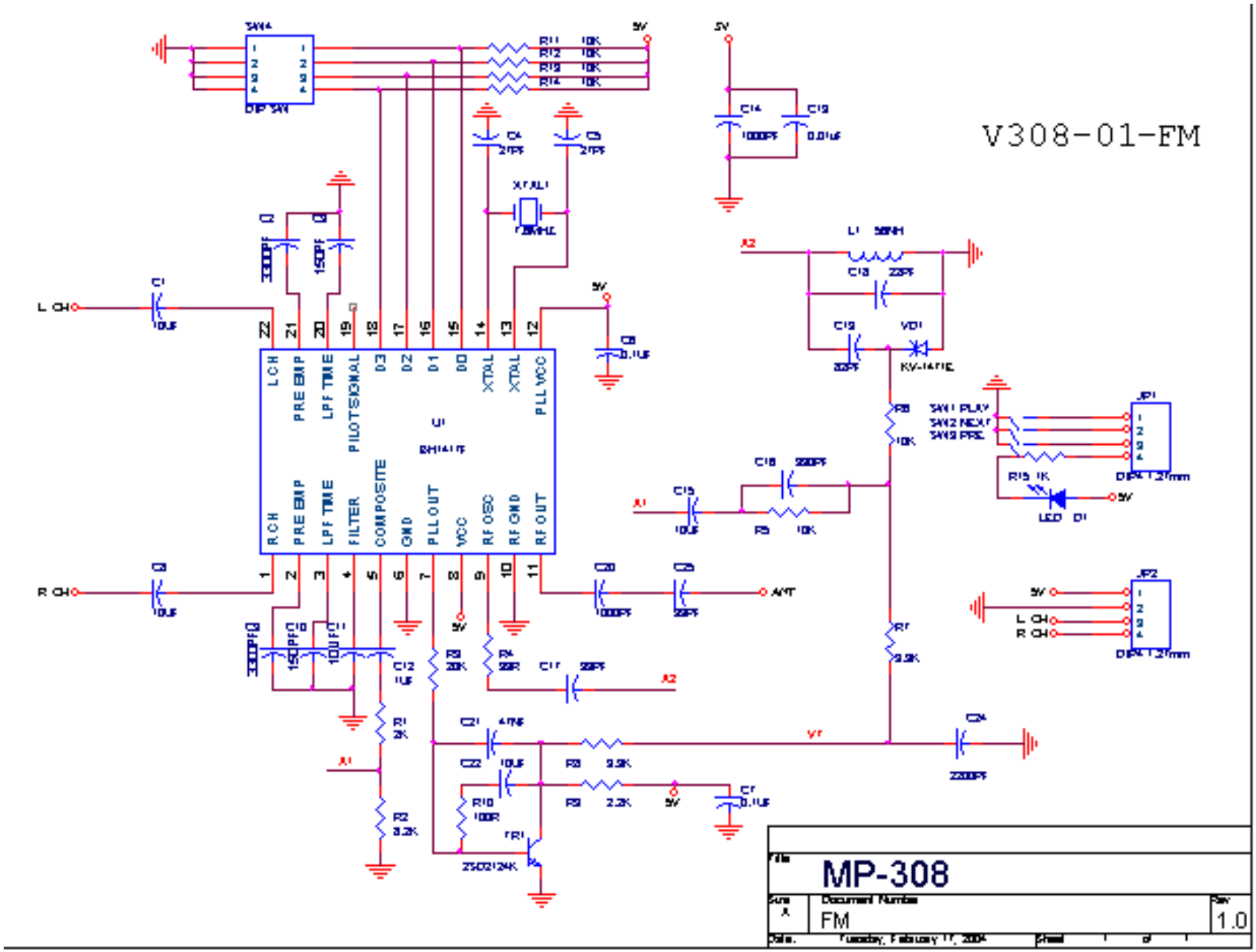
V308-01-FM
MP-308
FM
1.0
L CH
R CH
PRE EMP
LPF TIME
PILOT SIGNAL
D3
D2
D1
D0
XTAL
PLL VCC
FILTER
COMPOSITE
GND
PLL OUT
VCC
RF OSC
RF GND
RF OUT
U1
SW1 PLAY
SW2 NEXT
SW3 PRE
JP1
JP2
LED D1
VD1
KV-1471E
XTAL1
DIP SW
AVT
5V

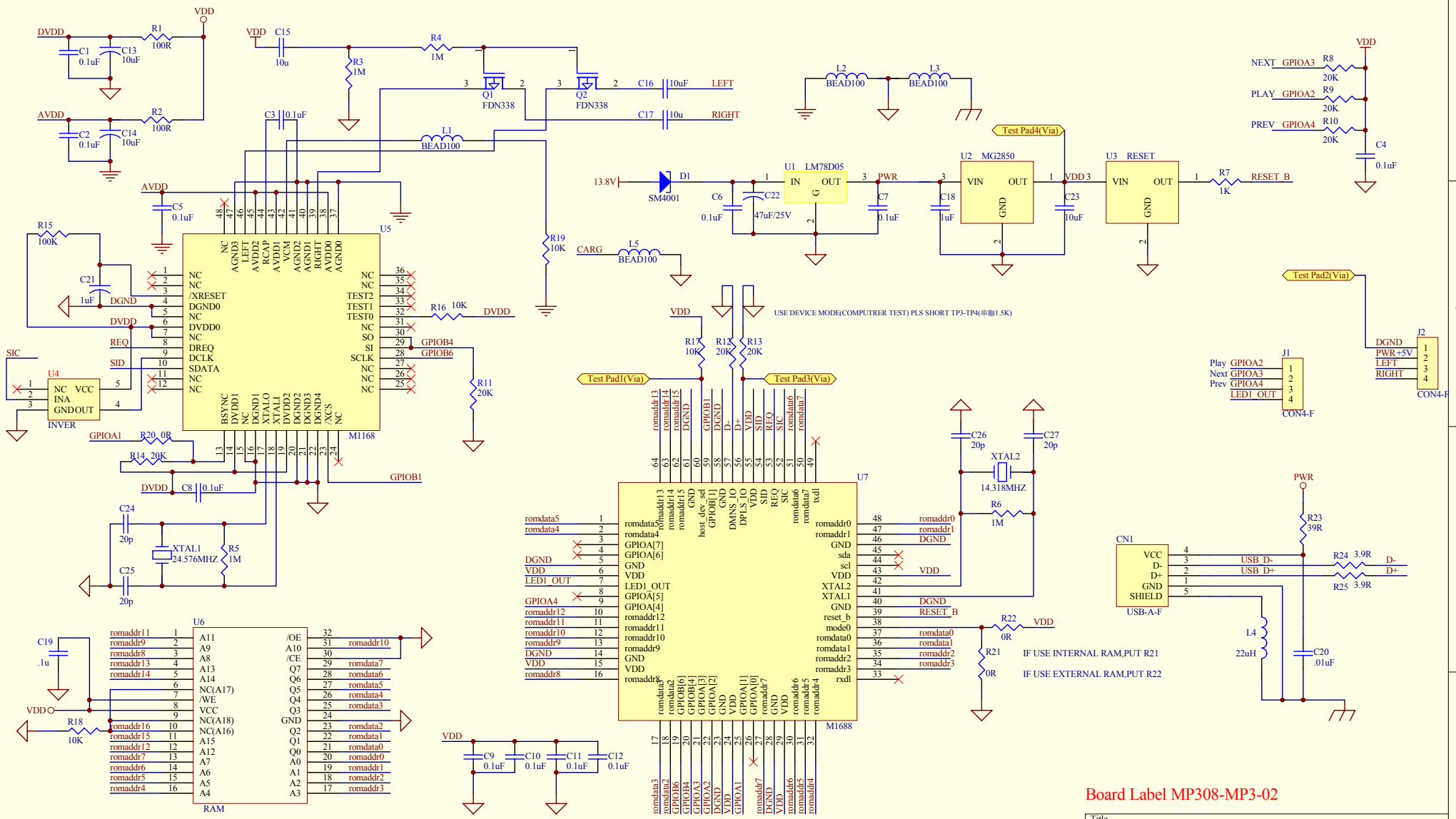

Title		
Size B	Number MP308	Revision 02
Date: 10-Jun-2004	Sheet of 1/1	
File: D:\我的文件夹\megaforce\MP3onCH\PROJECT\mp308v02 0610\mp308v02.DDB		