FCC SAR Test Report

FCC ID: RWO-RC300534

Project No.	:	2604C216
Equipment	:	Wireless Dongle
Brand Name	:	RAZER,
Model Name	:	RC30-0534, RC30-0534XXXX-XXXX (X can be 0-9 or A-Z)
Date of Receipt	:	Apr. 21, 2026
Date of Test	:	Apr. 23, 2026 ~ May 15, 2026
Issued Date	:	Jul. 13, 2026
Test Sample	:	Sample No.: DG92026042131
Standard(s)	:	Please refer to page 2.
Applicant	:	Razer Inc.
Address	:	9 Pasteur, Irvine, CA 92618, USA
Manufacturer	:	RAZER (ASIA-PACIFIC) PTE. LTD.
Address	:	Razer SEA HQ, 1 One-north Crescent, #02-01, Singapore 138538
Factory	:	RAZER TECHNOLOGY AND DEVELOPMENT (SHENZHEN) CO., LTD
Address	:	East Wing, 3rd Floor, Block 2, Phase 1 of Vision Shenzhen Business Park Keji South Road, Hi-Tech Industrial Park, Shenzhen 518057, China

The above equipment has been tested and found compliance with the requirement of the relative standards by BTL Inc. (Dongguan).

Prepared by : Justin Huang

Approved by : Herbort Liu

No.3, Jinshagang 1st Road, Dalang, Dongguan, Guangdong People's Republic of China.
Tel: +86-769-8318-3000 Web: www.newbtl.com Service mail: btl_qa@newbtl.com

Standard(s)	:	**IEEE Std C95.1:2019** IEEE Standard for Safety Levels with Respect to Human Exposure to Electric, Magnetic, and Electromagnetic Fields, 0 kHz to 300 GHz **IEEE Std 1528™-2013** IEEE Recommended Practice for Determining the Peak Spatial-Average Specific Absorption Rate (SAR) in the Human Head from Wireless Communications Devices: Measurement Techniques **KDB865664 D01** SAR measurement 100 MHz to 6 GHz v01r04
Test Method	:	**KDB447498 D04** Interim General RF Exposure Guidance v01 **KDB447498 D02** SAR Procedures for Dongle Xmtr v02 **KDB865664 D02** SAR Reporting v01r02

Declaration

BTL represents to the client that testing is done in accordance with standard procedures as applicable and that test instruments used has been calibrated with standards traceable to international standard(s) and/or national standard(s).

BTL's reports apply only to the specific samples tested under conditions. It is manufacturer's responsibility to ensure that additional production units of this model are manufactured with the identical electrical and mechanical components. BTL assumes no responsibility for the data provided by the customer, any statements, inferences or generalizations drawn by the customer or others from the reports issued by BTL.

The report must not be used by the client to claim product certification, approval, or endorsement by A2LA or any agency of the U.S. Government.

This report is the confidential property of the client. As a mutual protection to the clients, the public and ourselves, the test report shall not be reproduced, except in full, without our written approval.

BTL's laboratory quality assurance procedures are in compliance with the ISO/IEC 17025: 2017 requirements, and accredited by the conformity assessment authorities listed in this test report.

BTL is not responsible for the sampling stage, so the results only apply to the sample as received.

The information, data and test plan are provided by manufacturer which may affect the validity of results, so it is manufacturer's responsibility to ensure that the apparatus meets the essential requirements of applied standards and in all the possible configurations as representative of its intended use.

Limitation

For the use of the authority's logo is limited unless the Test Standard(s)/Scope(s)/Item(s) mentioned in this test report is (are) included in the conformity assessment authorities acceptance respective.
Please note that the measurement uncertainty is provided for informational purpose only and are not use in determining the Pass/Fail results.

Table of Contents Page

REVISION HISTORY 6
1 . GENERAL INFORMATION 7
1.1 STATEMENT OF COMPLIANCE 7
1.2 LABORATORY ENVIRONMENT 7
1.3 GENERAL DESCRIPTION OF EUT 8
1.4 MAIN TEST INSTRUMENTS 9
2 . RF EMISSIONS MEASUREMENT 10
2.1 TEST FACILITY 10
2.2 MEASUREMENT UNCERTAINTY 10
3 . SAR MEASUREMENTS SYSTEM CONFIGURATION 11
3.1 SAR MEASUREMENT SET-UP 11
3.1.1 TEST SETUP LAYOUT 11
3.2 DASY E-FIELD PROBE SYSTEM 12
3.2.1 PROBE SPECIFICATION 12
3.2.2 E-FIELD PROBE CALIBRATION 13
3.2.3 OTHER TEST EQUIPMENT 14
3.2.4 SCANNING PROCEDURE 15
3.2.5 SPATIAL PEAK SAR EVALUATION 16
3.2.6 DATA STORAGE AND EVALUATION 17
3.2.7 DATA EVALUATION BY SEMCAD 18
4 . SYSTEM VERIFICATION PROCEDURE 20
4.1 TISSUE VERIFICATION 20
4.2 SYSTEM CHECK 21
4.3 SYSTEM CHECK PROCEDURE 21
5 . SAR MEASUREMENT VARIABILITY AND UNCERTAINTY 22
5.1 SAR MEASUREMENT VARIABILITY 22
6 . OPERATIONAL CONDITIONS DURING TEST 23
6.1 TEST POSITION 23
6.2 TEST CONFIGURATION 24
6.2.1 WIFI TEST CONFIGURATION 24
7 . TEST RESULT 25
7.1 CONDUCTED POWER RESULTS 25
7.1.1 CONDUCTED POWER MEASUREMENTS OF 2.4G SRD 25
7.2 SAR TEST RESULTS 26
7.2.1 SAR MEASUREMENT RESULT 26

Table of Contents

Page

8 MULTIPLE TRANSMITTER EVALUATION 27

APPENDIX 28

1. TEST LAYOUT 28

Appendix A. SAR Plots of System Verification
Appendix B. SAR Plots of SAR Measurement
Appendix C. Calibration Certificate
Appendix D. Photographs of the Test Set-Up

REVISION HISTORY

Report No.	Version	Description	Issued Date	Note
BTL-FCC SAR-1-2604C216	R00	Original Report.	Jun. 05, 2026	Invalid
BTL-FCC SAR-1-2604C216	R01	This report modified the antenna gain to 2.2dBi in chapter 1.3. It is a revision of the report BTL-FCC SAR-1-2604C216 R00. This is a newly released report, replacing the BTL-FCC SAR-1-2604C216 R00 report.	Jul. 13, 2026	Valid

1. GENERAL INFORMATION

1.1 STATEMENT OF COMPLIANCE

Mode	Highest Body SAR-1g (W/kg)
2.4G SRD	0.23

Note:
1) The device is in compliance with Specific Absorption Rate (SAR) for general population uncontrolled exposure limits according to the FCC rule §2.1093, the ANSI/IEEE C95.1, the NCRP Report Number 86 for uncontrolled environment, and had been tested in accordance with the measurement methods and procedures specified in IEEE Std 1528 ™.

1.2 LABORATORY ENVIRONMENT

Temperature	Min. = 18ºC, Max. = 25ºC
Relative humidity	Min. = 30%, Max. = 70%
Ground system resistance	< 0.5Ω
Ambient noise is checked and found very low and in compliance with requirement of standards. Reflection of surrounding objects is minimized and in compliance with requirement of standards.	

1.3 GENERAL DESCRIPTION OF EUT

Equipment	Wireless Dongle			
Brand Name	RAZER,			
Test Model	RC30-0534			
Model Name	RC30-0534, RC30-0534XXXX-XXXX (X can be 0-9 or A-Z)			
Model Difference(s)	Only differ in model name.			
Hardware Version	v0.2			
Software Version	v0.3.4.1			
Modulation	GFSK			
Operation Frequency Range(s)	Band	TX (MHz)		
	2.4G SRD	2400~2483.5		
Test Frequency (low-mid-high)	2402MHz-2440MHz-2480MHz			
Antenna Information	Manufacturer	Model Name	Antenna Type	Gain (dBi)
	Shen Zhen Cicent Communication Technology Co., Ltd	GW170 Dongle	Monopole	2.2

Note:
1) The antenna gain is provided by the manufacturer.
2) The system model number is RZ04-0534XXXX-XXXX. This system consists of Gaming Headset(Model: RZ04-0534) and Wireless Dongle (Model:RC30-0534), X can be 0-9 or A-Z.

1.4 MAIN TEST INSTRUMENTS

Item	Equipment	Manufacturer	Model	Serial No.	Cal. Date	Cal. Interval
1	DASY8 System	Speag	DASY 8	N/A	N/A	N/A
2	Data Acquisition Electronics	Speag	DAE4	1390	Nov. 19, 2025	1 Year
3	E-field Probe	Speag	EX3DV4	3809	Feb. 09, 2026	1 Year
4	System Validation Dipole	Speag	D2450V2	919	Apr. 22, 2024	3 Years
5	Twin Sam Phantom	Speag	SAM-Twim V8.0	2081	N/A	N/A
6	Power Amplifier	Mini-Circuits	ZHL-42W+	QA1333003	Apr. 26, 2026	1 Year
7	Power Amplifier	Talent Microwave	TLPA1G18G-40-33-HS	220330003	Sep. 18, 2025	1 Year
8	DC Source metter	Iteck	IT6154	006104126768201001	Apr. 26, 2026	1 Year
9	Vector Network Analyzer	Agilent	E5071C	MY46102965	Dec. 20, 2025	1 Year
10	Signal Generator	Agilent	N5172B	MY53050758	Dec. 20, 2025	1 Year
11	Smart Power Sensor	R&S	NRP-Z21	102209	Dec. 20, 2025	1 Year
12	3.5mm Economy Calibration Kit	Agilent	85052D	MY43252246	Nov. 20, 2025	1 Year
13	Dielectric Assessment Kit	Speag	DAK-3.5	1226	Feb. 19, 2026	1 Year
14	Coupler	Woken	0110A05601O-10	COM5BNW1A2	Dec. 20, 2025	1 Year
15	Liquid Thermometer	Nscing Es	YZ6021S	/	Nov. 13, 2025	1 Year

Note:
1). “N/A” denotes no model name, serial No. or calibration specified.

2. RF EMISSIONS MEASUREMENT

2.1 TEST FACILITY

The test facilities used to collect the test data in this report is SAR room at the location of No.3, Jinshagang 1st Road, Dalang, Dongguan, Guangdong People's Republic of China.
BTL's Registration Number for FCC: 747969
BTL's Designation Number for FCC: CN1377

2.2 MEASUREMENT UNCERTAINTY

Uncertainty Budget for Frequency range of 300 MHz to 3 GHz

Symbol	Input quantity Xi (source of uncertainty)	Unc. Value	Prob. Dist.	Div.	ci (1g)	ci (10g)	Std.Unc. (1g) (±%)	Std.Unc. (10g) (±%)	Ref.
Measurement system errors									
CF	Probe calibration(±%)	13.0	N	2	1	1	6.5	6.5	8.4.1.1
CF_{drift}	Probe calibration drift(±%)	1.7	R	√3	1	1	1.0	1.0	8.4.1.2
LIN	Probe linearity and detection limit(±%)	4.7	R	√3	1	1	2.7	2.7	8.4.1.3
BBS	Broadband signal(±%)	3.0	R	√3	1	1	1.7	1.7	8.4.1.4
ISO	Probe isotropy(±%)	7.6	R	√3	1	1	4.4	4.4	8.4.1.5
DAE	Other probe and data acquisition errors(±%)	0.7	N	1	1	1	0.7	0.7	8.4.1.6
AMB	RF ambient and noise(±%)	1.8	N	1	1	1	1.8	1.8	8.4.1.7
Δ_{xyz}	Probe positioning errors(±mm)	0.006	N	1	0.14	0.14	0.08	0.08	8.4.1.8
DAT	Data processing errors(±%)	1.2	N	1	1	1	1.2	1.2	8.4.1.9
Phantom and device (DUT or validation antenna) errors									
$LIQ(\sigma)$	Conductivity (meas.)(±%)	2.7	N	1	0.78	0.71	2.1	1.9	8.4.2.1
$LIQ(T_c)$	Conductivity (temp.)(±%)	4.16	R	√3	0.78	0.71	1.9	1.7	8.4.2.2
EPS	Phantom Permittivity(±%)	14	R	√3	0	0	0.0	0.0	8.4.2.3
DIS	Distance DUT - TSL(±%)	2	N	1	2	2	4.0	4.0	8.4.2.4
D_{xyz}	Device Positioning(±%)	1.1	N	1	1	1	1.1	1.1	8.4.2.5
H	Device Holder(±%)	2.4	N	1	1	1	2.4	2.4	8.4.2.6
MOD	DUT Modulationm(±%)	2.4	R	√3	1	1	1.4	1.4	8.4.2.7
TAS	Time-average SAR(±%)	1.7	R	√3	1	1	1.0	1.0	8.4.2.8
RF_{drift}	DUT drift(±%)	1.7	N	1	1	1	1.7	1.7	8.4.2.9
VAL	Val Antenna Unc.(±%)	0	N	1	1	1	0.0	0.0	8.4.2.10
P_{in}	Unc. Input Power(±%)	0	N	1	1	1	0.0	0.0	8.4.2.11
Corrections to the SAR result									
$C(\varepsilon',\sigma)$	Deviation to Target(±%)	1.9	N	1	1	0.84	1.9	1.6	8.4.3.1
$C(R)$	SAR scaling(±%)	0	R	√3	1	1	0.0	0.0	8.4.3.2
$u(\Delta SAR)$	Combined uncertainty						10.9	10.8	
	Coverage Factor for 95%						k=2	k=2	
U	Expanded uncertainty					U =	21.8	21.5	

[a] Other probability distributions and divisors may be used if they better represent available knowledge of the quantities concerned.

3. SAR MEASUREMENTS SYSTEM CONFIGURATION

3.1 SAR MEASUREMENT SET-UP

The DASY system for performing compliance tests consists of the following items:

1. A standard high precision 6-axis robot (Stäubli RX family) with controller and software. An arm extension for accommodating the data acquisition electronics (DAE).
2. A dosimetric probe, i.e. an isotropic E-field probe optimized and calibrated for usage in tissue simulating liquid. The probe is equipped with an optical surface detector system.
3. A data acquisition electronic (DAE) which performs the signal amplification, signal multiplexing, AD-conversion, offset measurements, mechanical surface detection, collision detection, etc. The unit is battery powered with standard or rechargeable batteries. The signal is optically transmitted to the EOC.
4. A unit to operate the optical surface detector which is connected to the EOC.
5. The Electro-Optical Coupler (EOC) performs the conversion from the optical into a digital electric signal of the DAE. The EOC is connected to the DASY measurement server.
6. TheDASY measurement server, which performs all real-time data evaluation for field measurements and surface detection, controls robot movements and handles safety operation. A computer operating Windows.
7. DASY software and SEMCAD data evaluation software.
8. Remote control with teach panel and additional circuitry for robot safety such as warning lamps, etc.
9. The generic twin phantom enabling the testing of left-hand and right-hand usage.
10. The device holder for handheld mobile phones.
11. Tissue simulating liquid mixed according to the given recipes.
12. System validation dipoles allowing to validate the proper functioning of the system.

3.1.1 TEST SETUP LAYOUT

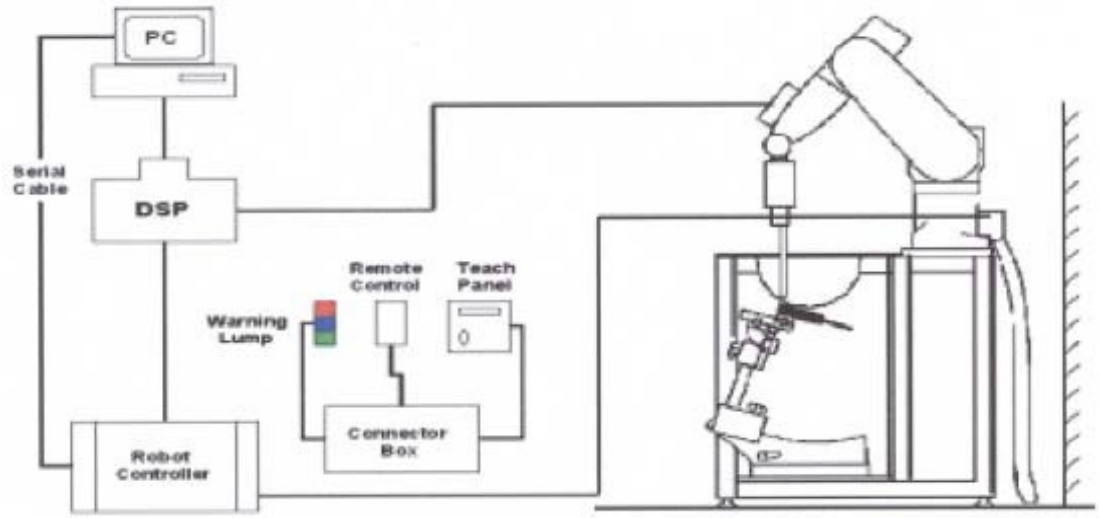

3.2 DASY E-FIELD PROBE SYSTEM

The SAR measurements were conducted with the dosimetric probe EX3DV4 (manufactured by SPEAG), designed in the classical triangular configuration and optimized for dosimetrice valuation.

3.2.1 PROBE SPECIFICATION

EX3DV4

Construction	Symmetrical design with triangular core Interleaved sensors Built-in shielding against static charges PEEK enclosure material (resistant to organic solvents, e.g., DGBE)
Calibration	ISO/IEC 17025 calibration service available
Frequency	10 MHz to 6 GHz Linearity: ± 0.2 dB (30 MHz to 6 GHz)
Directivity	± 0.3 dB in HSL (rotation around probe axis) ± 0.5 dB in tissue material (rotation normal to probe axis)
Dynamic Range	10 µW/g to > 100 mW/g Linearity:± 0.2dB
Dimensions	Overall length: 330 mm (Tip: 20 mm) Tip diameter: 2.5 mm (Body: 12 mm) Distance from probe tip to dipole centers: 1.0 mm

E-field Probe

3.2.2 E-FIELD PROBE CALIBRATION

Eachprobeiscalibratedaccordingtoadosimetricassessmentprocedurewithaccuracybetterthan±10%. The spherical isotropy was evaluatedandfoundtobebetterthan±0.25dB. The sensitivity parameters (NormX, NormY, NormZ), the diode compression parameter (DCP) and the conversion factor (ConvF) of the probe are tested.

The free space E-field from amplified probe outputs is determined in a test chamber. This is performed in a TEM cell for frequencies bellow 1 GHz, and in a wave guide above 1 GHz for free space. For the free space calibration, the probe is placed in the volumetric center of the cavity and at the proper orientation with the field. The probe is then rotated 360 degrees.

E-field temperature correlation calibration is performed in a flat phantom filled with the appropriate simulated brain tissue. The measured free space E-field in the medium correlates to temperature rise in a dielectric medium. For temperature correlation calibration a RF transparent thermistor-based temperature probe is used in conjunction with the E-field probe.

$$\mathbf{SAR} = \mathbf{C}\frac{\Delta T}{\Delta t}$$

Where: Δt=Exposure time (30 seconds),

C =Heat capacity of tissue (brain or muscle),

ΔT=Temperature increase due to RF exposure.

Or $$\mathbf{SAR} = \frac{|E|^2 \sigma}{\rho}$$

Where: σ=Simulated tissue conductivity,

ρ=Tissue density (kg/m3).

3.2.3 OTHER TEST EQUIPMENT

3.2.3.1 Device Holder for Transmitters

Construction: Simple but effective and easy-to-use extension for Mounting Device that facilitates the testing of larger devices (e.g., laptops, cameras, etc.) It is lightweight and fits easily on the upper part of the Mounting Device in place of the phone positioner. The extension is fully compatible with the Twin SAM, ELI and SAM v6.0 Phantoms.
Material: POM, Acrylic glass, Foam

3.2.3.2 Phantom

Model	Twin SAM	
Construction	The shell corresponds to the specifications of the Specific Anthropomorphic Mannequin (SAM) phantom defined in EN IEC/IEEE 62209-1528. It enables the dosimetric evaluation of left and right hand phone usage as well as body mounted usage at the flat phantom region. A cover prevents evaporation of the liquid. Reference markings on the phantom allow the complete setup of all predefined phantom positions and measurement grids by teaching three points with the robot.	
Shell Thickness	2 ± 0.2 mm	
Filling Volume	Approx. 25 liters	
Dimensions	Length:1000mm; Width: 500mm Height: adjustable feet	
Aailable	Special	

3.2.4 SCANNING PROCEDURE

The DASY installation includes predefined files with recommended procedures for measurements and validation. They are read-only document files and destined as fully defined but unmeasured masks. All test positions (head or body-worn) are tested with the same configuration of test steps differing only in the grid definition for the different test positions.

The “reference” and “drift” measurements are located at the beginning and end of the batch process. They measure the field drift at one single point in the liquid over the complete procedure. The indicated drift is mainly the variation of the DUT’s output power and should vary max. ± 5 %.

The “surface check” measurement tests the optical surface detection system of the DASY system by repeatedly detecting the surface with the optical and mechanical surface detector and comparing the results. The output gives the detecting heights of both systems, the difference between the two systems and the standard deviation of the detection repeatability. Air bubbles or refraction in the liquid due to separation of the sugar-water mixture gives poor repeatability (above ± 0.1mm). To prevent wrong results tests are only executed when the liquid is free of air bubbles. The difference between the optical surface detection and the actual surface depends on the probe and is specified with each probe. (It does not depend on the surface reflectivity or the probe angle to the surface within ± 30°.)

- Area Scan

The “area scan” measures the SAR above the DUT or verification dipole on a parallel plane to the surface. It is used to locate the approximate location of the peak SAR with 2D spline interpolation. The robot performs a stepped movement along one grid axis while the local electrical field strength is measured by the probe. The probe is touching the surface of the SAM during acquisition of measurement values. The standard scan uses large grid spacing for faster measurement. Standard grid spacing for head measurements is 15 mm in x- and y- dimension (≤2GHz), 12 mm inx- and y- dimension (2-4 GHz) and 10mm in x- and y- dimension (4-6GHz). If a finer resolution is needed, the grid spacing can be reduced. Grid spacing and orientation have no influence on the SAR result. For special applications where the standard scan method does not find the peak SAR within the grid, e.g. mobile phones with flip cover, the grid can be adapted in orientation.

- Zoom Scan

A “zoom scan” measures the field in a volume around the 2D peak SAR value acquired in the previous “coarse” scan. This is a fine grid with maximum scan spatial resolution: Δx_{zoom}, Δy_{zoom}≤2GHz -≤8mm, 2-4GHz -≤5 mm and 4-6 GHz-≤4mm; Δz_{zoom}≤3GHz -≤5 mm, 3-4 GHz-≤4mm and 4-6GHz-≤2mm where the robot additionally moves the probe along the z-axis away from the bottom of the Phantom. DASY is also able to perform repeated zoom scans if more than 1 peak is found during area scan. In this document, the evaluated peak 1g and 10g averaged SAR values are shown in the 2D-graphics in Appendix B. Test results relevant for the specified standard (see chapter 1.4.) are shown in table form in chapter 7.2.

A Z-axis scan measures the total SAR value at the x-and y-position of the maximum SAR value found during the cube scan. The probe is moved away in z-direction from the bottom of the SAM phantom in 2 mm steps. This measurement shows the continuity of the liquid and can - depending in the field strength – also show the liquid depth.

The following table summarizes the area scan and zoom scan resolutions per FCC KDB 865664D01:

Frequency	Maximun Area Scan resolution (Δx_{area}, Δy_{area})	Maximun Zoom Scan spatial resolution (Δx_{Zoom}, Δy_{Zoom})	Maximun Zoom Scan spatial resolution			Minimum zoom scan volume (x,y,z)
			Uniform Grid	Graded Grad		
			$\Delta z_{Zoom}(n)$	$\Delta z_{Zoom}(1)$*	$\Delta z_{Zoom}(n>1)$*	
⩽2GHz	⩽15mm	⩽8mm	⩽5mm	⩽4mm	⩽1.5*$\Delta z_{Zoom}(n-1)$	⩾30mm
2-3GHz	⩽12mm	⩽5mm	⩽5mm	⩽4mm	⩽1.5*$\Delta z_{Zoom}(n-1)$	⩾30mm
3-4GHz	⩽12mm	⩽5mm	⩽4mm	⩽3mm	⩽1.5*$\Delta z_{Zoom}(n-1)$	⩾28mm
4-5GHz	⩽10mm	⩽4mm	⩽3mm	⩽2.5mm	⩽1.5*$\Delta z_{Zoom}(n-1)$	⩾25mm
5-6GHz	⩽10mm	⩽4mm	⩽2mm	⩽2mm	⩽1.5*$\Delta z_{Zoom}(n-1)$	⩾22mm

3.2.5 SPATIAL PEAK SAR EVALUATION

The spatial peak SAR - value for 1 and 10 g is evaluated after the Cube measurements have been done. The basis of the evaluation are the SAR values measured at the points of the fine cube grid consisting of 5 x 5 x 7 points (with 8mm horizontal resolution) or 7 x 7 x 7 points (with 5mm horizontal resolution) or 8 x 8 x 7 points (with 4mm horizontal resolution). The algorithm that finds the maximal averaged volume is separated into three different stages.

- The data between the dipole center of the probe and the surface of the phantom are extrapolated. This data cannot be measured since the center of the dipole is 2.7 mm away from the tip of the probe and the distance between the surface and the lowest measuring point is about 1 mm (see probe calibration sheet). The extrapolated data from a cube measurement can be visualized by selecting “Graph Evaluated”.
- The maximum interpolated value is searched with a straight-forward algorithm. Around this maximum the SAR - values averaged over the spatial volumes (1g or 10 g) are computed using the 3d-spline interpolation algorithm. If the volume cannot be evaluated (i.e., if a part of the grid was cut off by the boundary of the measurement area) the evaluation will be started on the corners of the bottom plane of the cube.
- All neighboring volumes are evaluated until no neighboring volume with a higher average value is found.

Extrapolation

The extrapolation is based on a least square algorithm [W. Gander, Computer mathematic, p.168-180]. Through the points in the first 3 cm along the z-axis, polynomials of order four are calculated. These polynomials are then used to evaluate the points between the surface and the probe tip. The points, calculated from the surface, have a distance of 1 mm from each other.

Interpolation

The interpolation of the points is done with a 3d-Spline. The 3d-Spline is composed of three one-dimensional splines with the "Not a knot"-condition [W. Gander, Computer mathematic, p.141-150] (x, y and z -direction) [Numerical Recipes in C, Second Edition, p.123ff].

Volume Averaging

At First the size of the cube is calculated. Then the volume is integrated with the trapezoidal algorithm. 8000 points (20x20x20) are interpolated to calculate the average.

Advanced Extrapolation

DASY uses the advanced extrapolation option which is able to compensate boundary effects on E-field probes.

3.2.6 DATA STORAGE AND EVALUATION

3.2.6.1 Data Storage

The DASY software stores the acquired data from the data acquisition electronics as raw data (in microvolt readings from the probe sensors), together with all necessary software parameters for the data evaluation (probe calibration data, liquid parameters and device frequency and modulation data) in measurement files with the extension “DAE”. The software evaluates the desired unit and format for output each time the data is visualized or exported. This allows verification of the complete software setup even after the measurement and allows correction of incorrect parameter settings. For example, if a measurement has been performed with a wrong crest factor parameter in the device setup, the parameter can be corrected afterwards and the data can be re-evaluated.

The measured data can be visualized or exported in different units or formats, depending on the selected probe type ([V/m], [A/m], [°C], [mW/g], [mW/cm²], [dBrel], etc.). Some of these units are not available in certain situations or show meaningless results, e.g., a SAR output in a lossless media will always be zero. Raw data can also be exported to perform the evaluation with other software packages.

3.2.7 DATA EVALUATION BY SEMCAD

The SEMCAD software automatically executes the following procedures to calculate the field units from the microvolt readings at the probe connector. The parameters used in the evaluation are stored in the configuration modules of the software:

Probe parameters:	Sensitivity	Normi, a_{i0}, a_{i1},a_{i2}
	Conversion factor	$ConvF_i$
	Diode compression point	Dcp_i
Device parameters:	Frequency	f
	Crest factor	cf
Media parameters:	Conductivity	
	Density	

These parameters must be set correctly in the software. They can be found in the component documents or they can be imported into the software from the configuration files issued for the DASY components. In the direct measuring mode of the multimeter option, the parameters of the actual system setup are used. In the scan visualization and export modes, the parameters stored in the corresponding document files are used.

The first step of the evaluation is a linearization of the filtered input signal to account for the compression characteristics of the detector diode. The compensation depends on the input signal, the diode type and the DC-transmission factor from the diode to the evaluation electronics.

If the exciting field is pulsed, the crest factor of the signal must be known to correctly compensate for peak power. The formula for each channel can be given as:

$$V_i = U_i + U_i^2 \cdot cf / dcp_i$$

With	V_i= compensated signal of channel i	(i = x,y,z)
	U_i= input signal of channel i	(i = x, y,z)
	cf=crest factor of exciting field	(DASY parameter)
	dcp_i=diode compression point	(DASY parameter)

From the compensated input signals the primary field data for each channel can be evaluated:

E-field probes: $E_i = (V_i / Norm_i \cdot ConvF)^{1/2}$

H-field probes: $H_i = (V_i)^{1/2} \cdot (a_{i0} + a_{i1}f + a_{i2}f^2) / f$

With V_i= compensated signal of channel i (i = x,y,z)

$Norm_i$= sensor sensitivity of channel i (i = x, y,z)

$[mV/(V/m)^2]$for E-field Probes

ConvF = sensitivity enhancement in solution

aij=sensor sensitivity factors for H-field probes

f=carrier frequency [GHz]

E_i=electric field strength of channel i in V/m

H_i= magnetic field strength of channel i in A/m

The RSS value of the field components gives the total field strength (Hermitian magnitude):

$$E_{tot} = (E_X^2 + E_Y^2 + E_Z^2)^{1/2}$$

The primary field data are used to calculate the derived field units.

$$SAR = (E_{tot})^2 \cdot \sigma / (\rho \cdot 1000)$$

With SAR=local specific absorption rate in mW/g

E_{tot}=total field strength in V/m

=conductivity in[mho/m]or[Siemens/m]

=equivalent tissue density in g/cm^3

Note that the density is normally set to 1(or1.06), to account for actual brain density rather than the density of the simulation liquid. The power flow density is calculated assuming the excitation field to be a free space field.

$$P_{pwe} = E_{tot}^2/3770 \text{ or } P_{pwe} = H_{tot}^2 \cdot 37.7$$

With P_{pwe}= equivalent power density of a plane wave in mW/cm^2

E_{tot}=total field strength in V/m

H_{tot}=total magnetic field strength in A/m

4. SYSTEM VERIFICATION PROCEDURE

4.1 TISSUE VERIFICATION

The simulating liquids should be checked at the beginning of a series of SAR measurements to determine of the dielectic parameter are within the tolerances of the specified target values. The measured conductivity and relative permittivity should be within ± 5% of the target values.
The following materials are used for producing the tissue-equivalent materials.

Tissue Type	Bactericide	DGBE	HEC	NaCl	Sucrose	Triton X-100	Water	Diethylene Glycol Mono-hexylether
Head 2450	-	45.0	-	0.1	-	-	54.9	-

Salt: 99+% Pure Sodium Chloride; Sugar: 98+% Pure Sucrose; Water: De-ionized, 16M + resistivity
HEC: Hydroxyethyl Cellulose; DGBE: 99+% Di(ethylene glycol) butyl ether,[2-(2-butoxyethoxy)ethanol]
Triton X-100(ultra pure): Polyethylene glycol mono [4-(1,1,3,3-tetramethylbutyl)phenyl]ether

Tissue Verification									
Tissue Type	Frequency (MHz)	Liquid Temp. (℃)	Conductivity (σ)	Permittivity (εr)	Targeted Conductivity (σ)	Targeted Permittivity (εr)	Deviation Conductivity (σ) (%)	Deviation Permittivity (εr) (%)	Date
Head	2450	22.2	1.880	39.500	1.80	39.2	4.44	0.77	May 14, 2026

Note:
1)The dielectric parameters of the tissue-equivalent liquid should be measured under similar ambient conditions and within 2 °C of the conditions expected during the SAR evaluation to satisfy protocol requirements.
2)KDB 865664 was ensured to be applied for probe calibration frequencies greater than or equal to 50MHz of the EUT frequencies.
3)The above measured tissue parameters were used in the DASY software to perform interpolation via the DASY software to determine actual dielectric parameters at the test frequencies. The SAR test plots may slightly differ from the table above since the DASY rounds to three significant digits.

4.2 SYSTEM CHECK

The system check is performed for verifying the accuracy of the complete measurement system and performance of the software. The system check is performed with tissue equivalent material according to IEEE 1528 (described above). The following table shows system check results for all frequency bands and tissue liquids used during the tests.

System Check	Date	Frequency (MHz)	Targeted SAR 10g (W/kg)	Measured SAR 10g (W/kg)	normalized SAR 10g (W/kg)	Deviation 10g (%)	Dipole S/N
Head	May 14, 2026	2450	53.10	2.41	24.10	-2.82	919

4.3 SYSTEM CHECK PROCEDURE

The system check is performed by using a system check dipole which is positioned parallel to the planar part of the SAM phantom at the reference point. The distance of the dipole to the SAM phantom is determined by a plexiglass spacer. The dipole is connected to the signal source consisting of signal generator and amplifier via a directional coupler, N-connector cable and adaption to SMA. It is fed with a power of 250mW (below 3GHz) or 100mW (3-6GHz). To adjust this power a power meter is used.
The power sensor is connected to the cable before the system check to measure the power at this point and do adjustments at the signal generator. At the outputs of the directional coupler both return loss as well as forward power are controlled during the system check to make sure that emitted power at the dipole is kept constant. This can also be checked by the power drift measurement after the test. System check results have to be equal or near the values determined during dipole calibration (target SAR in table above) with the relevant liquids and test system (±10 %).

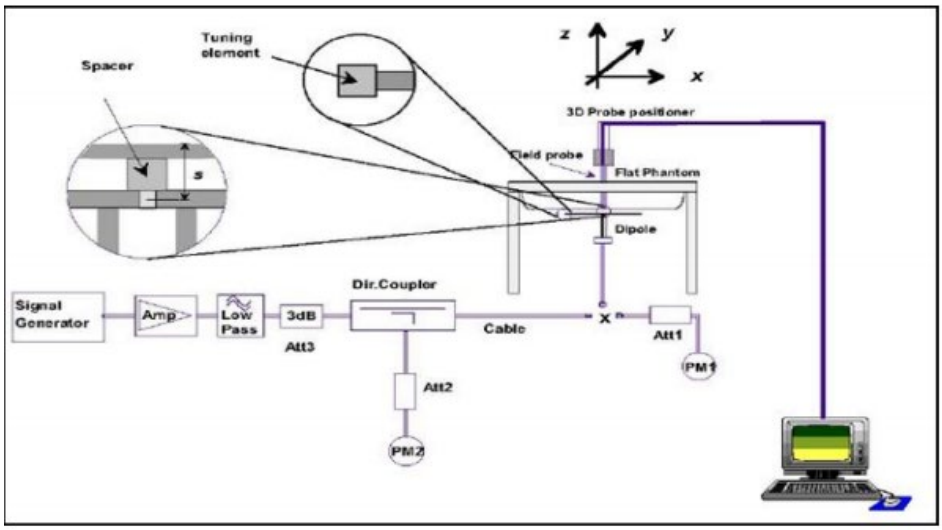

5. SAR MEASUREMENT VARIABILITY AND UNCERTAINTY

5.1 SAR MEASUREMENT VARIABILITY

Per KDB865664 D01 SAR measurement 100 MHz to 6 GHz, SAR measurement variability must be assessed for each frequency band, which is determined by the SAR probe calibration point and tissue-equivalent medium used for the device measurements. The additional measurements are repeated after the completion of all measurements requiring the same head or body tissue-equivalent medium in a frequency band. The test device should be returned to ambient conditions (normal room temperature) with the battery fully charged before it is re-mounted on the device holder for the repeated measurement(s) to minimize any unexpected variations in the repeated results.

1) Repeated measurement is not required when the original highest measured SAR is < 0.80 W/kg; steps 2) through 4) do not apply.
2) When the original highest measured SAR is ≥ 0.80 W/kg, repeat that measurement once.
3) Perform a second repeated measurement only if the ratio of largest to smallest SAR for the original and first repeated measurements is > 1.20 or when the original or repeated measurement is ≥ 1.45 W/kg (~ 10% from the 1-g SAR limit).
4) Perform a third repeated measurement only if the original, first or second repeated measurement is ≥ 1.5 W/kg and the ratio of largest to smallest SAR for the original, first and second repeated measurements is > 1.20.

The same procedures should be adapted for measurements according to extremity and occupational exposure limits by applying a factor of 2.5 for extremity exposure and a factor of 5 for occupational exposure to the corresponding SAR thresholds.

The detailed repeated measurement results are shown in Section 7.2.

6. OPERATIONAL CONDITIONS DURING TEST

6.1 TEST POSITION

Test all USB orientations [see figure below: (A) Horizontal-Up, (B) Horizontal-Down, (C) Vertical-Front, and (D) Vertical-Back and Tip] with a device-to-phantom separation distance of 5 mm.

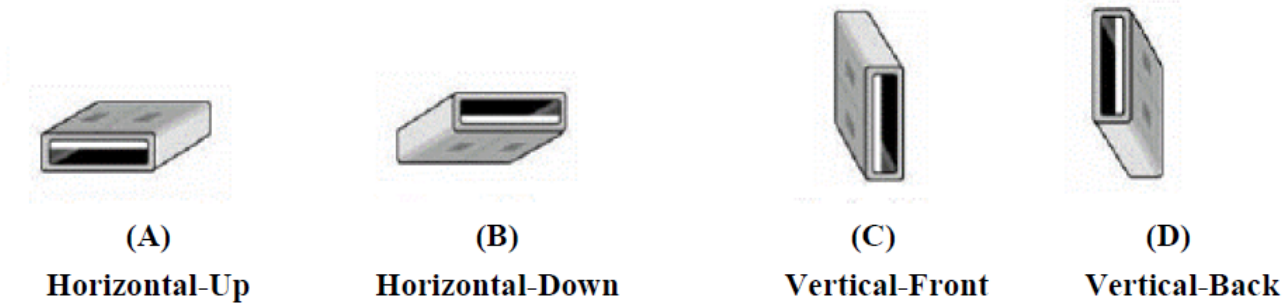

Fig 6.1 USB Connector Orientations Implemented on Laptop Computers

The location of the antennas inside the EUT is shown as below:

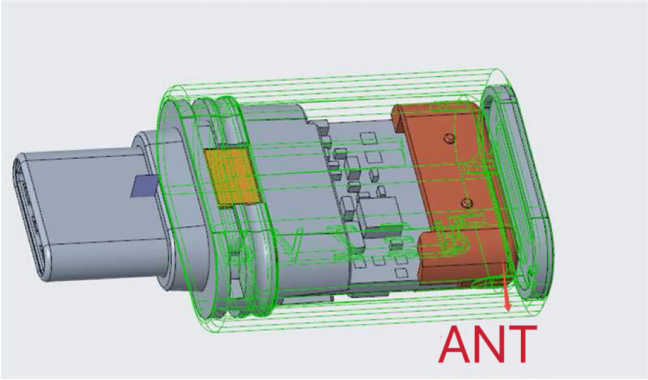

6.2 TEST CONFIGURATION

6.2.1 WIFI TEST CONFIGURATION

For 2.4G SRD SAR testing, WLAN engineering testing software installed on the DUT can provide continuous transmitting RF signal.

For 2.4G SRD SAR testing, a communication link is set up with the test mode software for WiFi mode test. During the test, at the each test frequency channel, the EUT is operated at the RF continuous emission mode. The test procedures in KDB 248227 D01 are applied.

Duty Cycle
2.4G SRD
60.128%

6.2.1.1 2.4G SAR Test Requirements

802.11b DSSS SAR Test Requirements

SAR is measured for 2.4 GHz 802.11b DSSS using either a fixed test position or, when applicable, the initial test position procedure. SAR test reduction is determined according to the following:
1) When the reported SAR of the highest measured maximum output power channel for the exposure configuration is ≤ 0.8 W/kg, no further SAR testing is required for 802.11b DSSS in that exposure configuration.
2) When the reported SAR is > 0.8 W/kg, SAR is required for that exposure configuration using the next highest measured output power channel. When any reported SAR is > 1.2 W/kg, SAR is required for the third channel; i.e., all channels require testing.

2.4 GHz 802.11g/n OFDM SAR Test Exclusion Requirements

When SAR measurement is required for 2.4 GHz 802.11g/n OFDM configurations, the measurement and test reduction procedures for OFDM are applied. SAR is not required for the following 2.4 GHz OFDM conditions.
1) When KDB Publication 447498 SAR test exclusion applies to the OFDM configuration.
2) When the highest reported SAR for DSSS is adjusted by the ratio of OFDM to DSSS specified maximum output power and the adjusted SAR is ≤ 1.2 W/kg.

SAR Test Requirements for OFDM configurations

When SAR measurement is required for 2.4 GHz 802.11g/n OFDM configurations, each stand alone. And frequency aggregated band is considered separately for SAR test reduction. In applying the initial test configuration and subsequent test configuration procedures, the 802.11 transmission configuration with the highest specified maximum output power and the channel within a test configuration with the highest measured maximum output power should be clearly distinguished to apply the procedures.

7. TEST RESULT

7.1 CONDUCTED POWER RESULTS

7.1.1 CONDUCTED POWER MEASUREMENTS OF 2.4G SRD

1. Conducted power measurements of 2.4G SRD

Mode	Rate	Frequency (MHz)	Max. Tune-up	AVG Power (dBm)
2.4G SRD	1M	2402	10.00	**9.28**
		2440	10.00	**9.02**
		2480	10.00	**9.01**
	2M	2402	10.00	9.24
		2440	10.00	9.03
		2480	10.00	8.91

Note:
1) The tested channel results are marks in bold.
2) The Average conducted power of 2.4G SRD is measured with RMS detector.

7.2 SAR TEST RESULTS

General Notes:
1) Per KDB447498 D04, all measurement SAR results are scaled to the maximum tune-up tolerance limit to demonstrate compliant.
2) Per KDB447498 D04, testing of other required channels within the operating mode of a frequency band is not required when the reported 1-g or 10-g SAR for the mid-band or highest output power channel is: ≤ 0.8 W/kg or 2.0 W/kg, for 1-g or 10-g respectively, when the transmission band is ≤ 100 MHz. When the maximum output power variation across the required test channels is > ½ dB, instead of the middle channel, the highest output power channel must be used.
3) Per KDB865664 D01, for each frequency band, repeated SAR measurement is required only when the measured SAR is ≥ 0.8W/kg; if the deviation among the repeated measurement is ≤ 20%, and the measured SAR < 1.45W/kg, only one repeated measurement is required.
4) Per KDB941225 D06, the DUT Dimension is bigger than 9 cm x 5 cm, so 10mm is chosen as the test separation distance for Hotspot mode. When the antenna-to-edge distance is greater than 2.5cm, such position does not need to be tested.
5) Per KDB648474 D04, SAR is evaluated without a headset connected to the device. When the standalone reported body-worn SAR is ≤ 1.2 W/kg, no additional SAR evaluations using a headset are required.
6) Per KDB865664 D02, SAR plot is only required for the highest measured SAR in each exposure configuration, wireless mode and frequency band combination; Plots are also required when the measured SAR is > 1.5 W/kg, or > 7.0 W/kg for occupational exposure. The published RF exposure KDB procedures may require additional plots; for example, to support SAR to peak location separation ratio test exclusion and/or volume scan post-processing.

WLAN Notes:
1. For exposure conditions with multiple test positions, such as handset operating next to the ear, devices with hotspot mode, procedures for initial test position can be applied. Using the transmission mode determined by the DSSS procedure or initial test configuration, area scans are measured for all positions in an exposure condition. The test position with the highest extrapolated (peak) SAR is used as the initial test position. When the reported SAR of the initial test position is ≤ 0.4 W/kg, further SAR measurement is not required for the other (remaining) test positions. Otherwise, SAR is evaluated at the subsequent highest peak SAR position until the reported SAR result is ≤ 0.8 W/kg or all test positions are measured.
2. Justification for test configurations for WLAN per KDB Publication 248227 for 2.4GHZ WIFI single transmission chain operations, the highest measured maximum output power Channel for DSSS was selected for SAR measurement. SAR for OFDM modes (2.4GHz 802.11g/n) was not required due to the maximum allowed powers and the highest reported DSSS SAR. See Section7.1 for more information.

7.2.1 SAR MEASUREMENT RESULT

1. SAR test results of 2.4G SRD

Test No.	Band	Mode	Frequency	Test Position	Separation Distance (mm)	Data Rate	Duty Cycle %	Maximum Tune-up (dBm)	Conducted Power (dBm)	Power Drift (dB)	SAR 1g (W/kg)	SAR 10g (W/kg)	Scaling Factor	Reported 1g SAR (W/kg)
W01	2.4G	SRD_1M	2402MHz	Horizontal Up	5	1M	60.13	10	9.28	0.04	**0.118**	**0.058**	**1.18**	**0.232**
W02	2.4G	SRD_1M	2402MHz	Horizontal Down	5	1M	60.13	10	9.28	0.08	0.065	0.047	1.18	0.128
W03	2.4G	SRD_1M	2402MHz	Vertical Front	5	1M	60.13	10	9.28	-0.04	0.046	0.023	1.18	0.090
W04	2.4G	SRD_1M	2402MHz	Vertical Back	5	1M	60.13	10	9.28	-0.03	0.068	0.036	1.18	0.133
W05	2.4G	SRD_1M	2402MHz	Tip Side	5	1M	60.13	10	9.28	0.08	0.024	0.012	1.18	0.047
W06	2.4G	SRD_1M	2440MHz	Horizontal Up	5	1M	60.13	10	9.02	0.03	0.103	0.049	1.25	0.215
W07	2.4G	SRD_1M	2480MHz	Horizontal Up	5	1M	60.13	10	9.01	0.04	0.088	0.042	1.26	0.184

Note: The value with boldface is the maximum SAR Value of each test band.

8 MULTIPLE TRANSMITTER EVALUATION

The following tables list information which is relevant for the decision if a simultaneous transmit evaluation is necessary according to FCC KDB 447498 D04 Interim General RF Exposure Guidance v01.

The location of the antennas inside the EUT is shown as below:

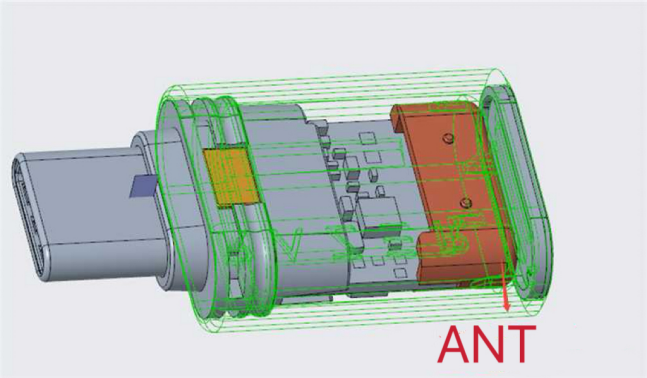

Note: The EUT only has one antenna and does not have synchronous transmission function.

APPENDIX

1. TEST LAYOUT

Specific Absorption Rate Test Layout

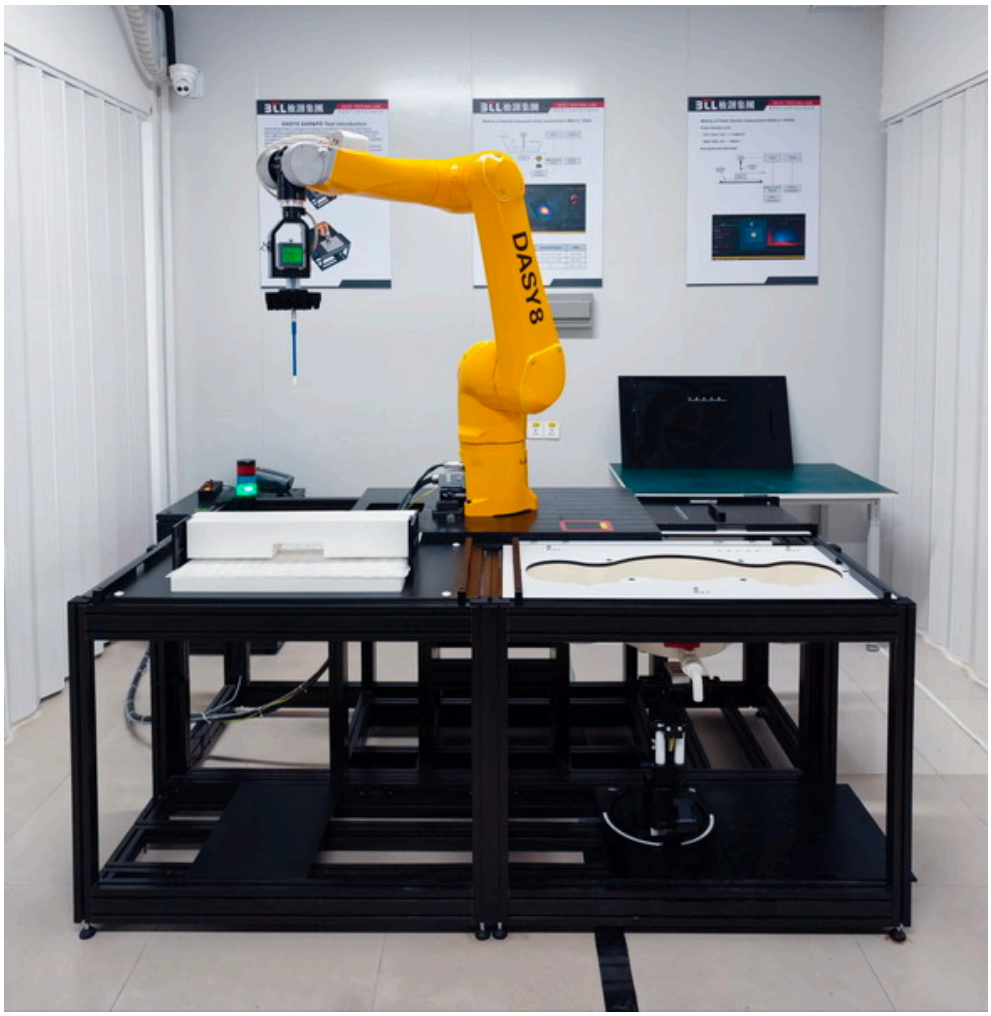

Liquid depth in the flat Phantom (≥15cm depth)

HSL_600MHz-10000MHz_Body_20.1cm

Appendix A. SAR Plots of System Verification

(Pls See BTL-FCC SAR-1-2604C216_Appendix A.)

Appendix B. SAR Plots of SAR Measurement

(Pls See BTL-FCC SAR-1-2604C216_Appendix B.)

Appendix C. Calibration Certificate

(Pls See BTL-FCC SAR-1-2604C216_Appendix C.)

Appendix D. Photographs of the Test Set-Up

(Pls See BTL-FCC SAR-1-2604C216_Appendix D.)

End of Test Report