Annex A. Plots of System Verification

The plots for system verification are shown as follows.

Plots of System Verification

Test Laboratory: Bureau Veritas ADT SAR/HAC Testing Lab Date: 2021/12/17

S01 System Check_H2450_211217

DUT: Dipole 2450 MHz; Type: D2450V2; SN: 737

Communication System: UID 0, CW; Frequency: 2450 MHz;Duty Cycle: 1:1
Medium: H19T27N1_1217 Medium parameters used (interpolated): f = 2450 MHz; σ = 1.854 S/m; ε_r = 38.646; ρ = 1000 kg/m^3
Ambient Temperature：23.6 ℃ ; Liquid Temperature：23.4℃

DASY5 Configuration:
- Probe: EX3DV4 - SN7537; ConvF(7.61, 7.61, 7.61) @ 2450 MHz; Calibrated: 2021/04/26
- Sensor-Surface: 1.4mm (Mechanical Surface Detection)
- Electronics: DAE4 Sn1585; Calibrated: 2021/04/15
- Phantom: ELI Phantom_2118; Type: QD OVA 004 AA;
- Measurement SW: DASY52, Version 52.10 (4); SEMCAD X Version 14.6.14 (7483)

Pin=50mW/Area Scan (81x81x1): Interpolated grid: dx=1.200 mm, dy=1.200 mm
Maximum value of SAR (interpolated) = 4.43 W/kg

Pin=50mW/Zoom Scan (7x7x7)/Cube 0: Measurement grid: dx=5mm, dy=5mm, dz=5mm
Reference Value = 50.69 V/m; Power Drift = 0.12 dB
Peak SAR (extrapolated) = 5.44 W/kg
SAR(1 g) = 2.61 W/kg; SAR(10 g) = 1.23 W/kg (SAR corrected for target medium)
Maximum value of SAR (measured) = 4.42 W/kg

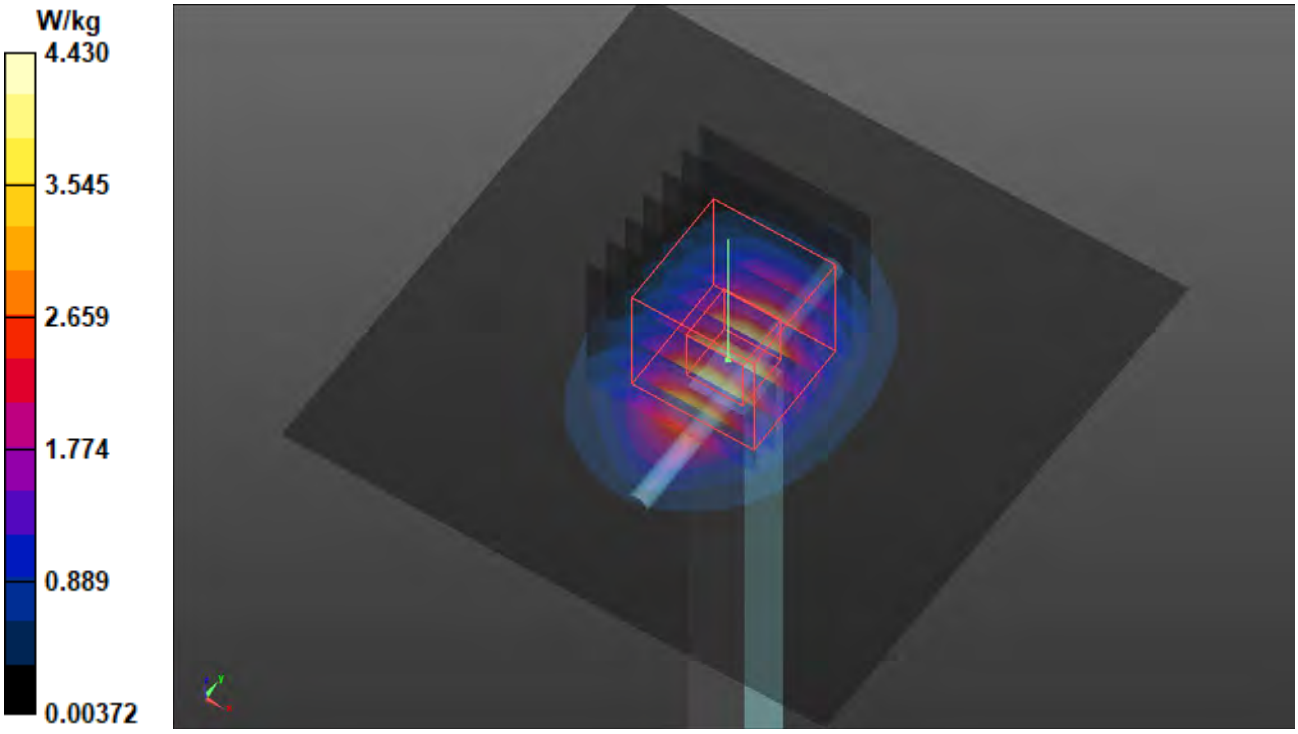

Plots of System Verification

Test Laboratory: Bureau Veritas ADT SAR/HAC Testing Lab Date: 2021/12/17

S02 System Check_H5250_211217

DUT: Dipole 5 GHz; Type: D5GHzV2; SN: 1019

Communication System: UID 0, CW; Frequency: 5250 MHz;Duty Cycle: 1:1
Medium: H34T60N1_1217 Medium parameters used (interpolated): f = 5250 MHz; σ = 4.79 S/m; ε_r = 35.104; ρ = 1000 kg/m^3
Ambient Temperature：23.6 ℃ ; Liquid Temperature：23.4℃

DASY5 Configuration:
- Probe: EX3DV4 - SN7537; ConvF(5.5, 5.5, 5.5) @ 5250 MHz; Calibrated: 2021/04/26
- Sensor-Surface: 1.4mm (Mechanical Surface Detection)
- Electronics: DAE4 Sn1585; Calibrated: 2021/04/15
- Phantom: ELI Phantom_2118; Type: QD OVA 004 AA;
- Measurement SW: DASY52, Version 52.10 (4); SEMCAD X Version 14.6.14 (7483)

Pin=50mW/Area Scan (91x91x1): Interpolated grid: dx=1.000 mm, dy=1.000 mm
Maximum value of SAR (interpolated) = 9.78 W/kg

Pin=50mW/Zoom Scan (7x7x7)/Cube 0: Measurement grid: dx=4mm, dy=4mm, dz=1.4mm
Reference Value = 51.68 V/m; Power Drift = -0.14 dB
Peak SAR (extrapolated) = 16.7 W/kg
SAR(1 g) = 4.17 W/kg; SAR(10 g) = 1.2 W/kg (SAR corrected for target medium)
Maximum value of SAR (measured) = 10.6 W/kg

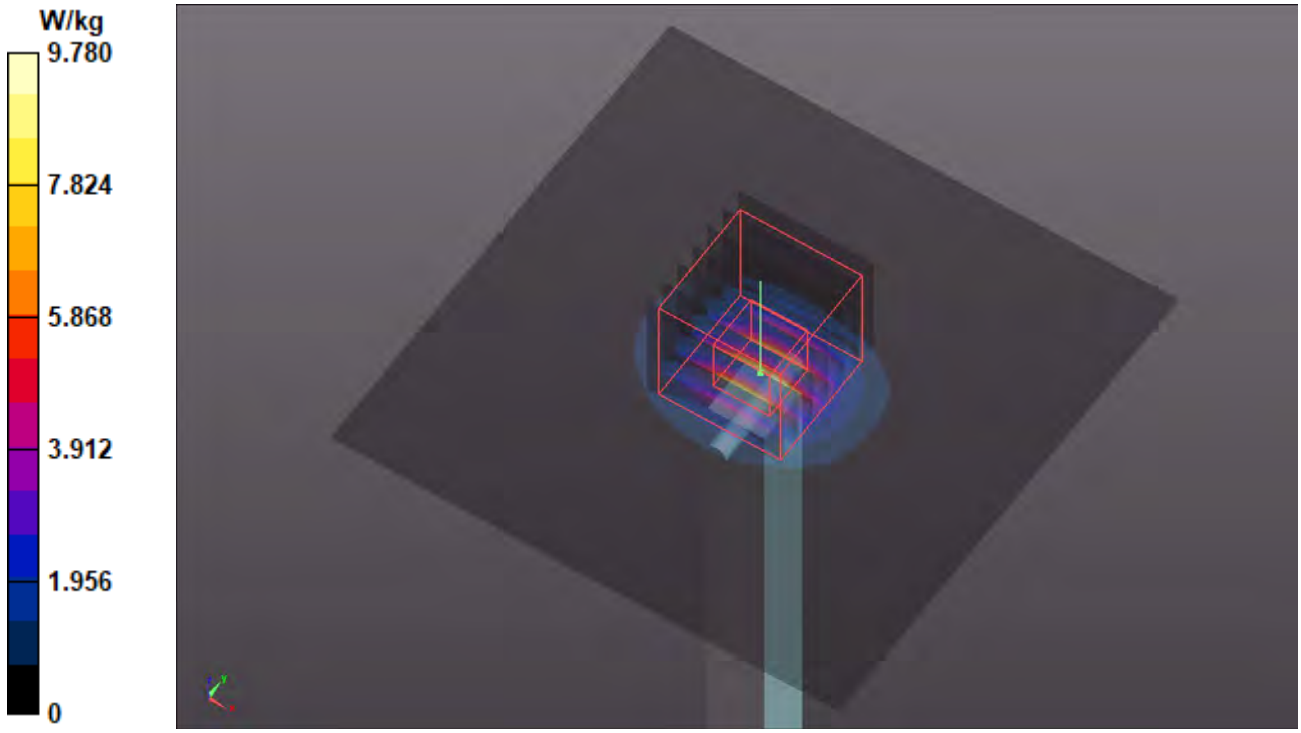

Plots of System Verification

Test Laboratory: Bureau Veritas ADT SAR/HAC Testing Lab Date: 2021/12/17

S03 System Check_H5600_211217

DUT: Dipole 5 GHz; Type: D5GHzV2; SN: 1019

Communication System: UID 0, CW; Frequency: 5600 MHz;Duty Cycle: 1:1
Medium: H34T60N1_1217 Medium parameters used: f = 5600 MHz; σ = 5.142 S/m; ε_r = 34.62; ρ = 1000 kg/m^3
Ambient Temperature：23.6 ℃ ; Liquid Temperature：23.4℃

DASY5 Configuration:
- Probe: EX3DV4 - SN7537; ConvF(4.8, 4.8, 4.8) @ 5600 MHz; Calibrated: 2021/04/26
- Sensor-Surface: 1.4mm (Mechanical Surface Detection)
- Electronics: DAE4 Sn1585; Calibrated: 2021/04/15
- Phantom: ELI Phantom_2118; Type: QD OVA 004 AA;
- Measurement SW: DASY52, Version 52.10 (4); SEMCAD X Version 14.6.14 (7483)

Pin=50mW/Area Scan (91x91x1): Interpolated grid: dx=1.000 mm, dy=1.000 mm
Maximum value of SAR (interpolated) = 11.1 W/kg

Pin=50mW/Zoom Scan (7x7x7)/Cube 0: Measurement grid: dx=4mm, dy=4mm, dz=1.4mm
Reference Value = 53.14 V/m; Power Drift = -0.04 dB
Peak SAR (extrapolated) = 19.9 W/kg
SAR(1 g) = 4.54 W/kg; SAR(10 g) = 1.29 W/kg (SAR corrected for target medium)
Maximum value of SAR (measured) = 11.8 W/kg

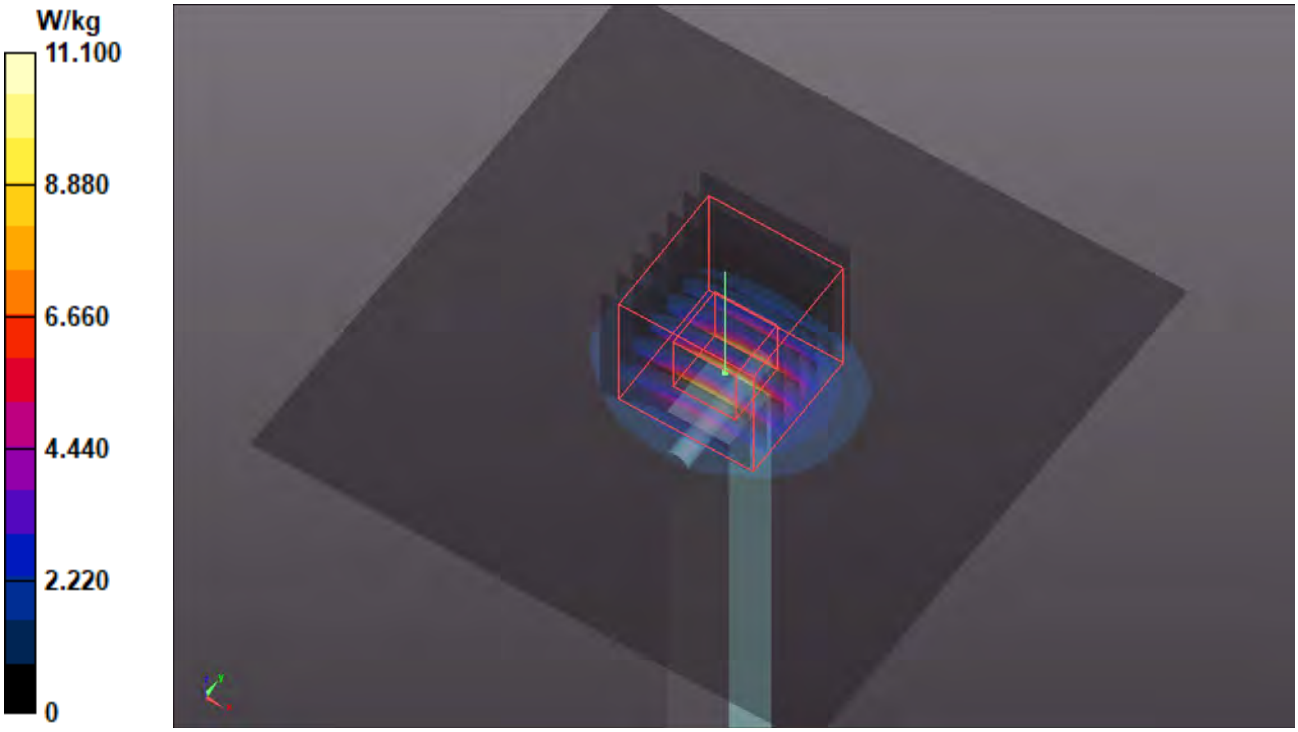

Plots of System Verification

Test Laboratory: Bureau Veritas ADT SAR/HAC Testing Lab Date: 2021/12/17

S04 System Check_H5750_211217

DUT: Dipole 5 GHz; Type: D5GHzV2; SN: 1019

Communication System: UID 0, CW; Frequency: 5750 MHz;Duty Cycle: 1:1
Medium: H34T60N1_1217 Medium parameters used: f = 5750 MHz; σ = 5.292 S/m; ε_r = 34.437; ρ = 1000 kg/m^3
Ambient Temperature：23.6 ℃ ; Liquid Temperature：23.4℃

DASY5 Configuration:
- Probe: EX3DV4 - SN7537; ConvF(4.95, 4.95, 4.95) @ 5750 MHz; Calibrated: 2021/04/26
- Sensor-Surface: 1.4mm (Mechanical Surface Detection)
- Electronics: DAE4 Sn1585; Calibrated: 2021/04/15
- Phantom: ELI Phantom_2118; Type: QD OVA 004 AA;
- Measurement SW: DASY52, Version 52.10 (4); SEMCAD X Version 14.6.14 (7483)

Pin=50mW/Area Scan (91x91x1): Interpolated grid: dx=1.000 mm, dy=1.000 mm
Maximum value of SAR (interpolated) = 8.28 W/kg

Pin=50mW/Zoom Scan (7x7x7)/Cube 0: Measurement grid: dx=4mm, dy=4mm, dz=1.4mm
Reference Value = 45.94 V/m; Power Drift = -0.03 dB
Peak SAR (extrapolated) = 16.3 W/kg
SAR(1 g) = 3.98 W/kg; SAR(10 g) = 1.16 W/kg (SAR corrected for target medium)
Maximum value of SAR (measured) = 9.86 W/kg

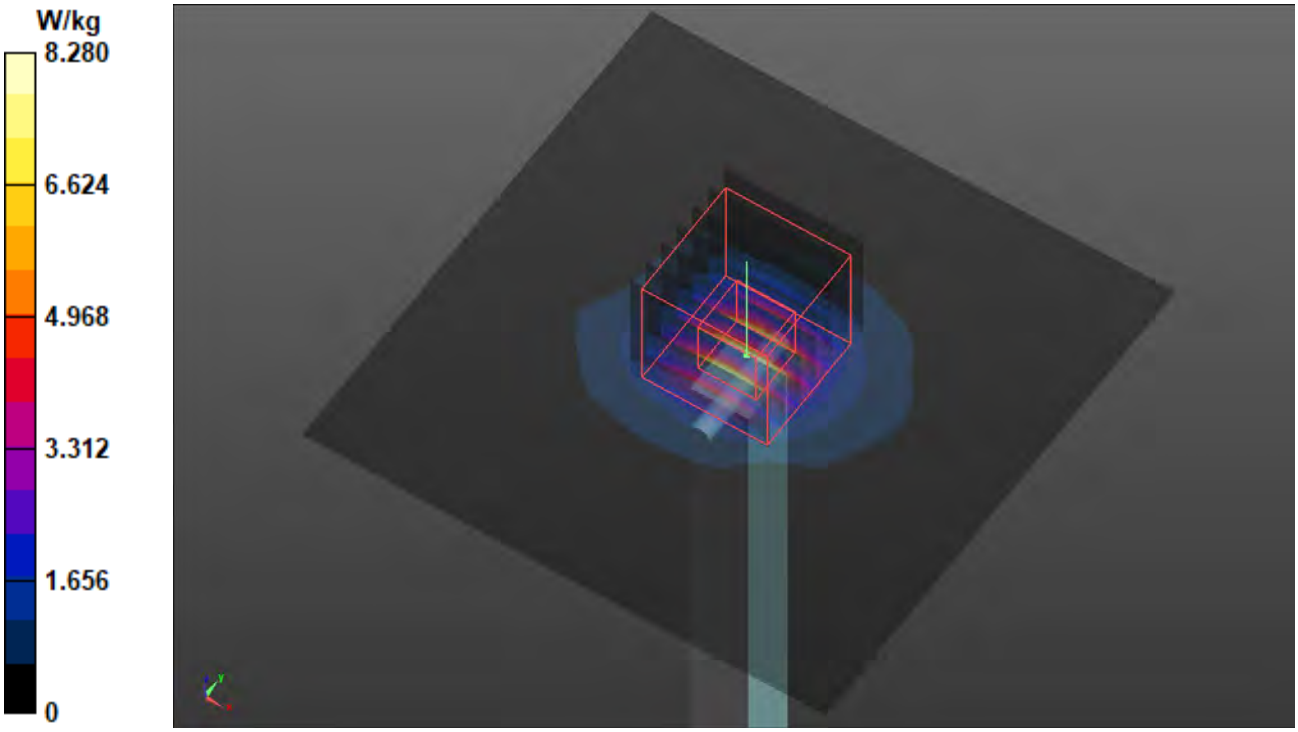

Plots of System Verification

Test Laboratory: Bureau Veritas ADT SAR/HAC Testing Lab Date: 2021/12/17

S05 System Check_H2450_211217

DUT: Dipole 2450 MHz; Type: D2450V2; SN: 737

Communication System: UID 0, CW; Frequency: 2450 MHz;Duty Cycle: 1:1
Medium: H19T27N1_1217 Medium parameters used (interpolated): f = 2450 MHz; σ = 1.854 S/m; ε_r = 38.646; ρ = 1000 kg/m^3
Ambient Temperature：23.6 ℃ ; Liquid Temperature：23.4℃

DASY5 Configuration:
- Probe: EX3DV4 - SN7537; ConvF(7.61, 7.61, 7.61) @ 2450 MHz; Calibrated: 2021/04/26
- Sensor-Surface: 1.4mm (Mechanical Surface Detection)
- Electronics: DAE4 Sn1585; Calibrated: 2021/04/15
- Phantom: ELI Phantom_2118; Type: QD OVA 004 AA;
- Measurement SW: DASY52, Version 52.10 (4); SEMCAD X Version 14.6.14 (7483)

Pin=50mW/Area Scan (81x81x1): Interpolated grid: dx=1.200 mm, dy=1.200 mm
Maximum value of SAR (interpolated) = 4.43 W/kg

Pin=50mW/Zoom Scan (7x7x7)/Cube 0: Measurement grid: dx=5mm, dy=5mm, dz=5mm
Reference Value = 50.69 V/m; Power Drift = 0.12 dB
Peak SAR (extrapolated) = 5.44 W/kg
SAR(1 g) = 2.61 W/kg; SAR(10 g) = 1.23 W/kg (SAR corrected for target medium)
Maximum value of SAR (measured) = 4.42 W/kg

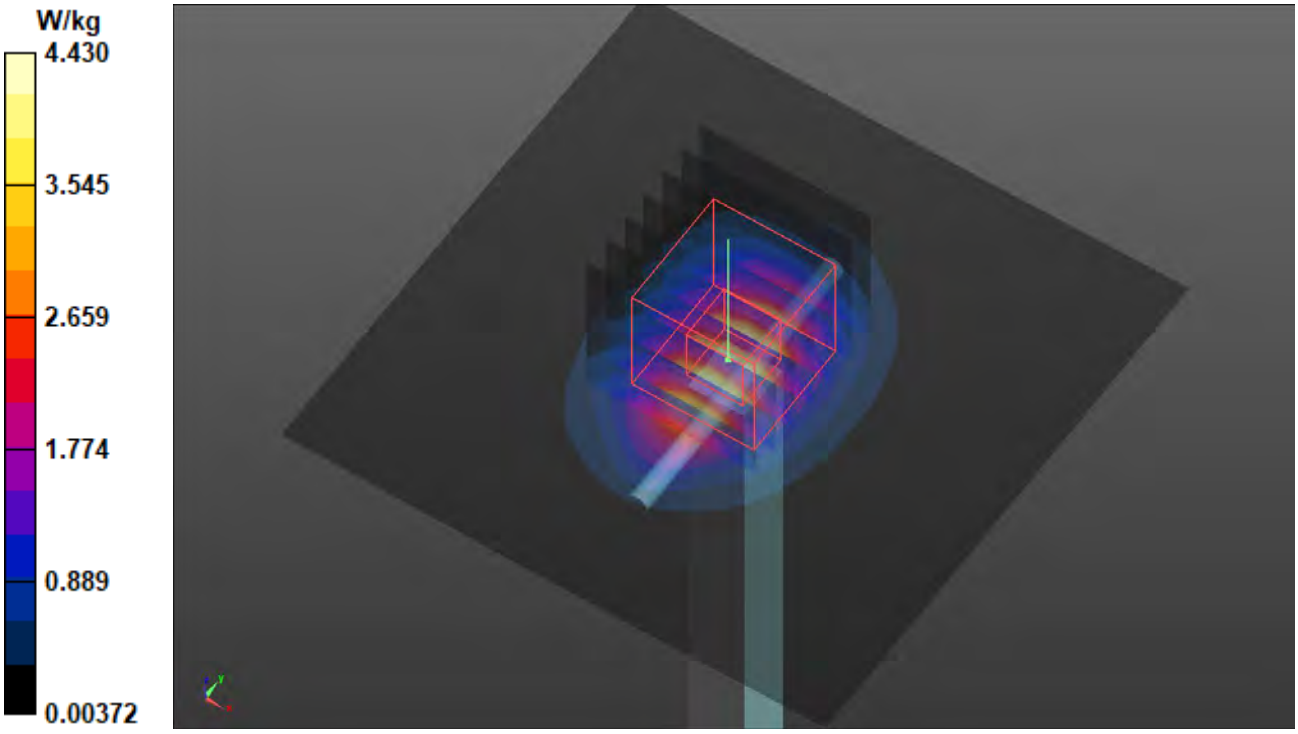

Measurement Report
S06S System Check_H6.5GHz_211220
Device under Test Properties

Model, Manufacturer	Dimensions [mm]	IMEI	DUT Type
H6.5GHz	50.0 x 10.0 x 8.0	SN: 1008	6.5GHzV2 Validation Kit

Exposure Conditions

Phantom Section, TSL	Position, Test Distance [mm]	Band	Group, UID	Frequency [MHz], Channel Number	Conversion Factor	TSL Conductivity [S/m]	TSL Permittivity
Flat, HSL			UID 0-	6500	5.5	6.10	33.7

Hardware Setup

Phantom	TSL, Measured Date	Probe, Calibration Date	DAE, Calibration Date
ELI V5.0 (20deg probe tilt) - 1204	H50T72N1, 2021-Dec-20	EX3DV4 - SN3650, 2021-03-26	DAE4 Sn1590, 2021-09-20

Scan Setup

	Area Scan	Zoom Scan
Grid Extents [mm]	45.0 x 90.0	22.0 x 22.0 x 22.0
Grid Steps [mm]	7.5 x 7.5	3.4 x 3.4 x 1.4
Sensor Surface [mm]	3.0	1.4

Measurement Results

	Area Scan	Zoom Scan
Date	2021-12-20	2021-12-20
psSAR1g [W/Kg]	21.8	26.9
psSAR10g [W/Kg]	4.51	4.98
Power Drift [dB]	0.08	-0.02

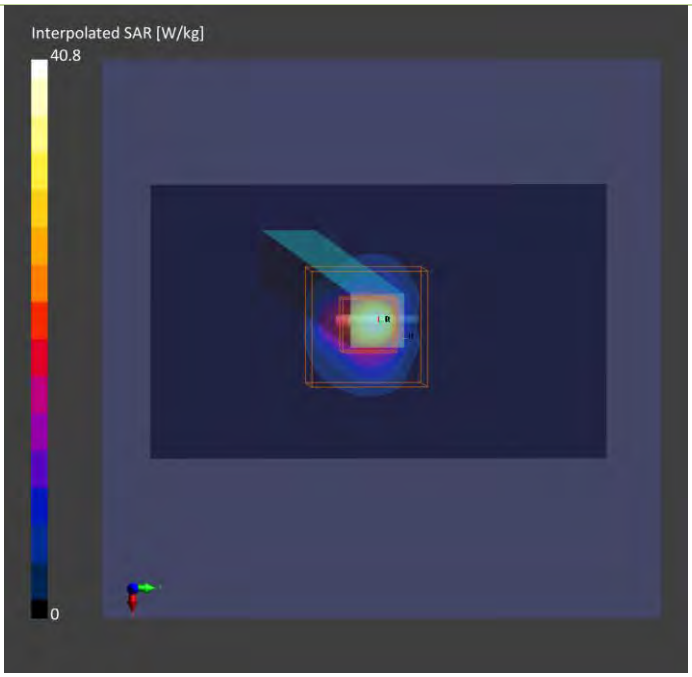

Test Lab: Bureau Veritas ADT SAR/HAC/PD Testing Lab
Power Density Plot No.:
S06P PD_System Check_10 GHz_2021.12.20

Device under Test Properties

Name, Manufacturer	Dimensions [mm]	IMEI	DUT Type
SPEAG	100.0 x 100.0 x 172.0	SN: 1025	-

Exposure Conditions

Phantom Section	Position, Test Distance [mm]	Band	Group, UID	Frequency [MHz], Channel Number	Conversion Factor
5GAir	Front 10.00	Validation band	CW	10000.0	1.0

Hardware Setup

Phantom	Medium	Probe, Calibration Date	DAE, Calibration Date
mmWave	Air---	EUmmWV4 - SN9438_F1-55GHz, 2021-07-26	DAE4 Sn1590, 2021-09-20

Scan Setup

	5G Scan
Grid Extents [mm]	120.0 x 120.0
Grid Steps [lambda]	0.25 x 0.25
Sensor Surface [mm]	10.0

Measurement Results

	5G Scan
Date	2021-12-20
Avg. Area [cm^2]	4.00
$pS_{tot}avg$[W/m^2]	42.1
$pS_n avg$ [W/m^2]	41.8
E_{peak} [V/m]	136
Power Drift [dB]	0.01

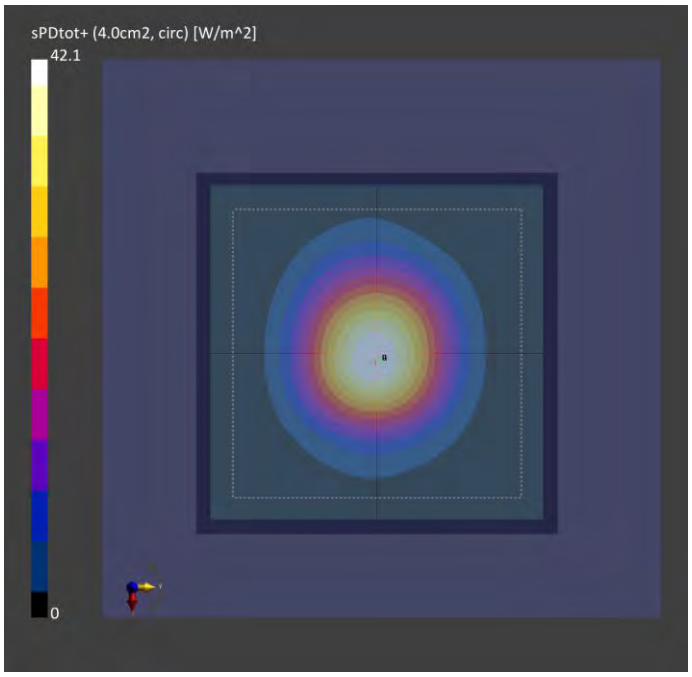

Annex B. Plots of Measurement

The SAR plots for highest measured SAR in each exposure configuration, wireless mode and frequency band combination are shown as follows.

Plots of Measurement

Test Laboratory: Bureau Veritas ADT SAR/HAC Testing Lab Date: 2021/12/17

P01 WLAN2.4G_802.11b_Bottom_0mm_Ch1_Ant 0+1

DUT: P21123538

Communication System: UID 10012 - CAB, IEEE 802.11b WiFi 2.4 GHz (DSSS, 1 Mbps); Frequency: 2412 MHz;Duty Cycle: 1:1
Medium: H19T27N1_1217 Medium parameters used: f = 2412 MHz; σ = 1.814 S/m; ε_r = 38.878; ρ = 1000 kg/m^3
Ambient Temperature：23.6 ℃ ; Liquid Temperature：23.4℃

DASY5 Configuration:
- Probe: EX3DV4 - SN7537; ConvF(7.61, 7.61, 7.61) @ 2412 MHz; Calibrated: 2021/04/26
- Sensor-Surface: 1.4mm (Mechanical Surface Detection)
- Electronics: DAE4 Sn1585; Calibrated: 2021/04/15
- Phantom: ELI Phantom_2118; Type: QD OVA 004 AA;
- Measurement SW: DASY52, Version 52.10 (4); SEMCAD X Version 14.6.14 (7483)

Area Scan (71x301x1): Interpolated grid: dx=1.200 mm, dy=1.200 mm
Maximum value of SAR (interpolated) = 0.824 W/kg

Zoom Scan (7x7x7)/Cube 0: Measurement grid: dx=5mm, dy=5mm, dz=5mm
Reference Value = 21.20 V/m; Power Drift = -0.01 dB
Peak SAR (extrapolated) = 1.14 W/kg
SAR(1 g) = 0.721 W/kg; SAR(10 g) = 0.321 W/kg (SAR corrected for target medium)
Smallest distance from peaks to all points 3 dB below = 7 mm
Ratio of SAR at M2 to SAR at M1 = 51.5%
Maximum value of SAR (measured) = 0.897 W/kg

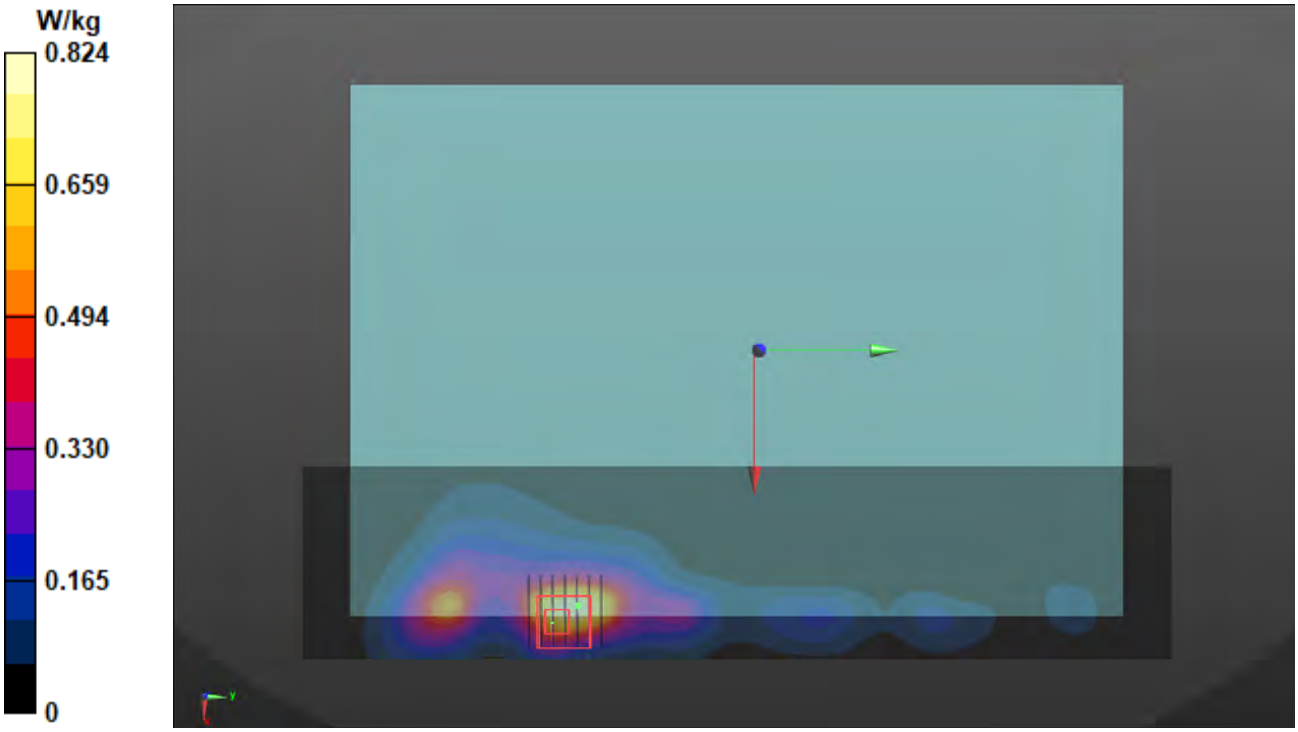

Plots of Measurement

Test Laboratory: Bureau Veritas ADT SAR/HAC Testing Lab Date: 2021/12/17

P02 WLAN5.3G_802.11a_Bottom_0mm_Ch56_Ant 1

DUT: P21123538

Communication System: UID 10062 - CAD, IEEE 802.11a WiFi 5 GHz (OFDM, 6 Mbps); Frequency: 5280 MHz;Duty Cycle: 1:1.03
Medium: H34T60N1_1217 Medium parameters used: f = 5280 MHz; σ = 4.814 S/m; ε_r = 35.072; ρ = 1000 kg/m^3
Ambient Temperature：23.6 ℃ ; Liquid Temperature：23.4℃

DASY5 Configuration:
- Probe: EX3DV4 - SN7537; ConvF(5.5, 5.5, 5.5) @ 5280 MHz; Calibrated: 2021/04/26
- Sensor-Surface: 1.4mm (Mechanical Surface Detection)
- Electronics: DAE4 Sn1585; Calibrated: 2021/04/15
- Phantom: ELI Phantom_2118; Type: QD OVA 004 AA;
- Measurement SW: DASY52, Version 52.10 (4); SEMCAD X Version 14.6.14 (7483)

Area Scan (81x361x1): Interpolated grid: dx=1.000 mm, dy=1.000 mm
Maximum value of SAR (interpolated) = 1.05 W/kg

Zoom Scan (7x7x7)/Cube 0: Measurement grid: dx=4mm, dy=4mm, dz=1.4mm
Reference Value = 15.52 V/m; Power Drift = 0.15 dB
Peak SAR (extrapolated) = 2.09 W/kg
SAR(1 g) = 0.791 W/kg; SAR(10 g) = 0.269 W/kg (SAR corrected for target medium)
Smallest distance from peaks to all points 3 dB below = 7.2 mm
Ratio of SAR at M2 to SAR at M1 = 64.6%
Maximum value of SAR (measured) = 1.24 W/kg

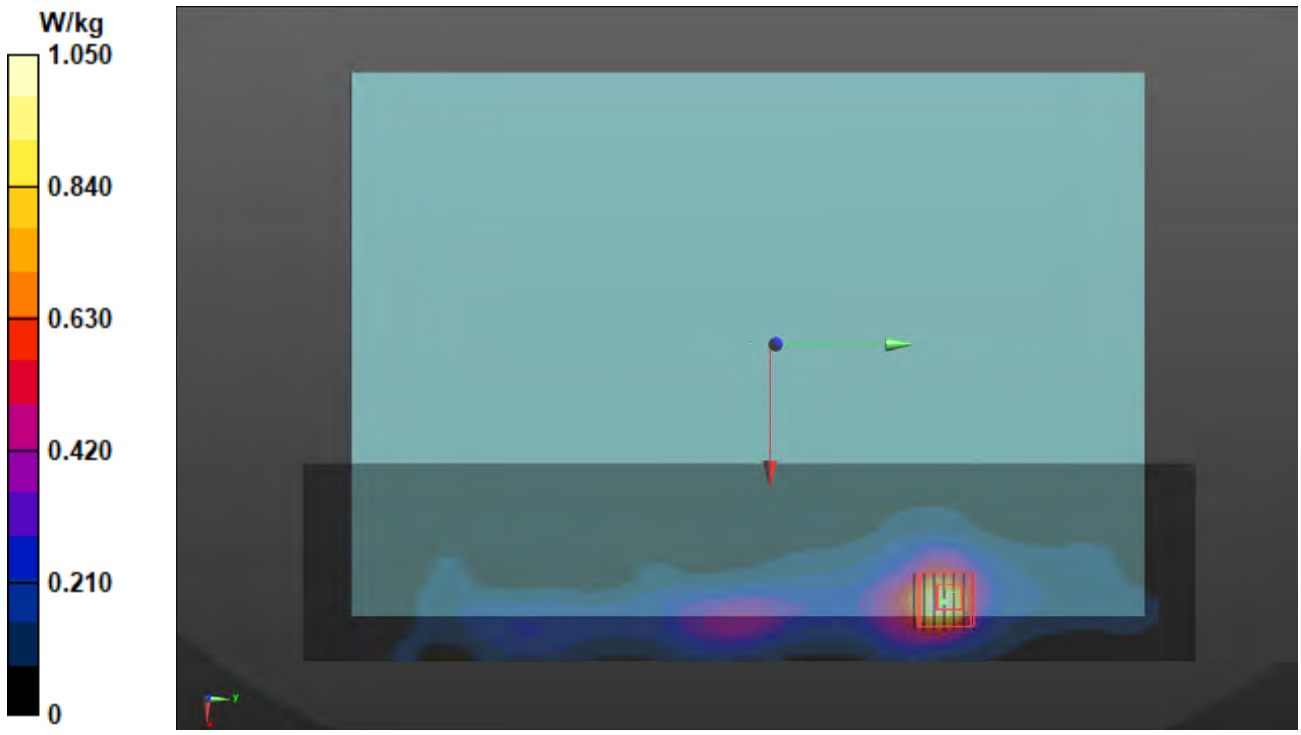

Plots of Measurement

Test Laboratory: Bureau Veritas ADT SAR/HAC Testing Lab Date: 2021/12/17

P03 WLAN5.6G_802.11a_Bottom_0mm_Ch144_Ant 0

DUT: P21123538

Communication System: UID 10062 - CAD, IEEE 802.11a WiFi 5 GHz (OFDM, 6 Mbps); Frequency: 5720 MHz;Duty Cycle: 1:1.04
Medium: H34T60N1_1217 Medium parameters used: f = 5720 MHz; σ = 5.265 S/m; ε_r = 34.465; ρ = 1000 kg/m^3
Ambient Temperature：23.6 ℃ ; Liquid Temperature：23.4℃

DASY5 Configuration:
- Probe: EX3DV4 - SN7537; ConvF(4.95, 4.95, 4.95) @ 5720 MHz; Calibrated: 2021/04/26
- Sensor-Surface: 1.4mm (Mechanical Surface Detection)
- Electronics: DAE4 Sn1585; Calibrated: 2021/04/15
- Phantom: ELI Phantom_2118; Type: QD OVA 004 AA;
- Measurement SW: DASY52, Version 52.10 (4); SEMCAD X Version 14.6.14 (7483)

Area Scan (81x361x1): Interpolated grid: dx=1.000 mm, dy=1.000 mm
Maximum value of SAR (interpolated) = 1.69 W/kg

Zoom Scan (7x7x7)/Cube 0: Measurement grid: dx=4mm, dy=4mm, dz=1.4mm
Reference Value = 19.60 V/m; Power Drift = -0.04 dB
Peak SAR (extrapolated) = 3.26 W/kg
SAR(1 g) = 0.803 W/kg; SAR(10 g) = 0.254 W/kg (SAR corrected for target medium)
Smallest distance from peaks to all points 3 dB below = 7.4 mm
Ratio of SAR at M2 to SAR at M1 = 61.3%
Maximum value of SAR (measured) = 1.83 W/kg

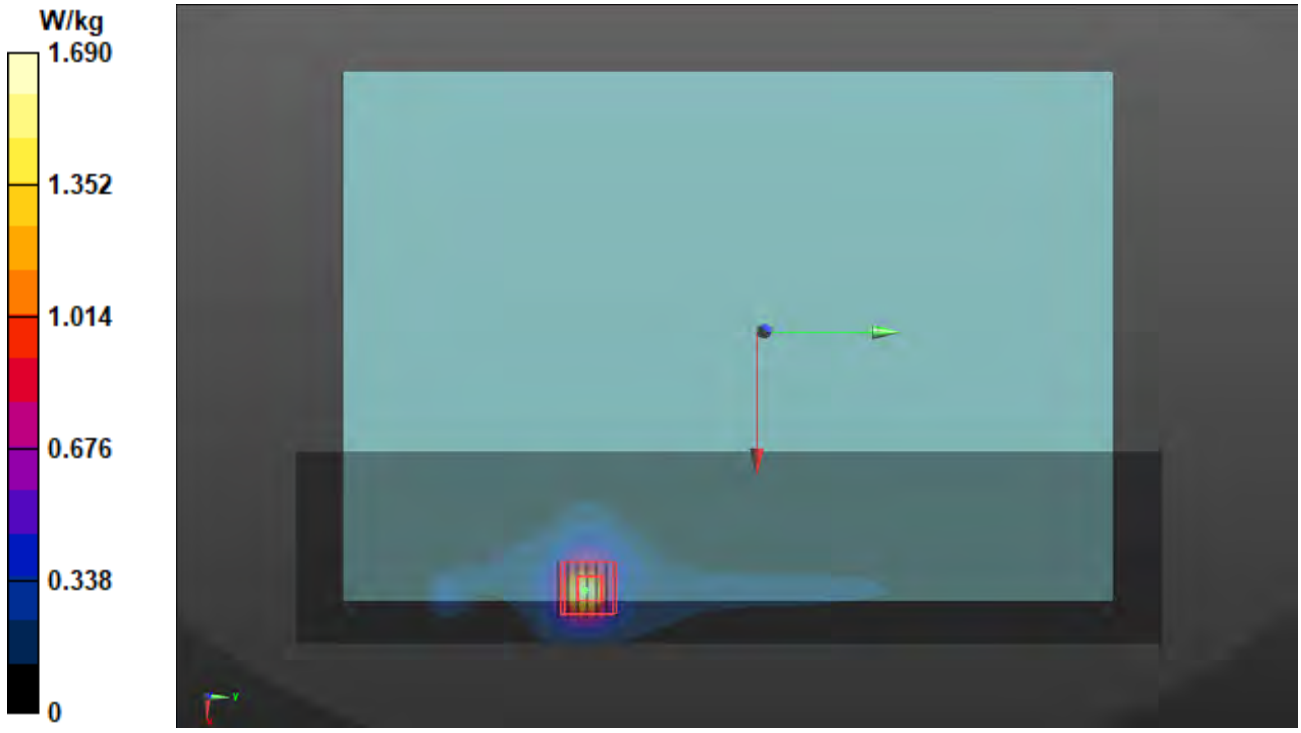

Plots of Measurement

Test Laboratory: Bureau Veritas ADT SAR/HAC Testing Lab Date: 2021/12/17

P04 WLAN5.8G_802.11a_Bottom_0mm_Ch161_Ant 0+1

DUT: P21123538

Communication System: UID 10062 - CAD, IEEE 802.11a WiFi 5 GHz (OFDM, 6 Mbps); Frequency: 5805 MHz;Duty Cycle: 1:1.18
Medium: H34T60N1_1217 Medium parameters used: f = 5805 MHz; σ = 5.341 S/m; ε_r = 34.363; ρ = 1000 kg/m^3
Ambient Temperature：23.6 ℃ ; Liquid Temperature：23.4℃

DASY5 Configuration:
- Probe: EX3DV4 - SN7537; ConvF(4.95, 4.95, 4.95) @ 5805 MHz; Calibrated: 2021/04/26
- Sensor-Surface: 1.4mm (Mechanical Surface Detection)
- Electronics: DAE4 Sn1585; Calibrated: 2021/04/15
- Phantom: ELI Phantom_2118; Type: QD OVA 004 AA;
- Measurement SW: DASY52, Version 52.10 (4); SEMCAD X Version 14.6.14 (7483)

Area Scan (81x361x1): Interpolated grid: dx=1.000 mm, dy=1.000 mm
Maximum value of SAR (interpolated) = 1.39 W/kg

Zoom Scan (7x7x7)/Cube 0: Measurement grid: dx=4mm, dy=4mm, dz=1.4mm
Reference Value = 18.13 V/m; Power Drift = -0.01 dB
Peak SAR (extrapolated) = 2.77 W/kg
SAR(1 g) = 0.723 W/kg; SAR(10 g) = 0.227 W/kg (SAR corrected for target medium)
Smallest distance from peaks to all points 3 dB below = 8.2 mm
Ratio of SAR at M2 to SAR at M1 = 64.9%
Maximum value of SAR (measured) = 1.54 W/kg

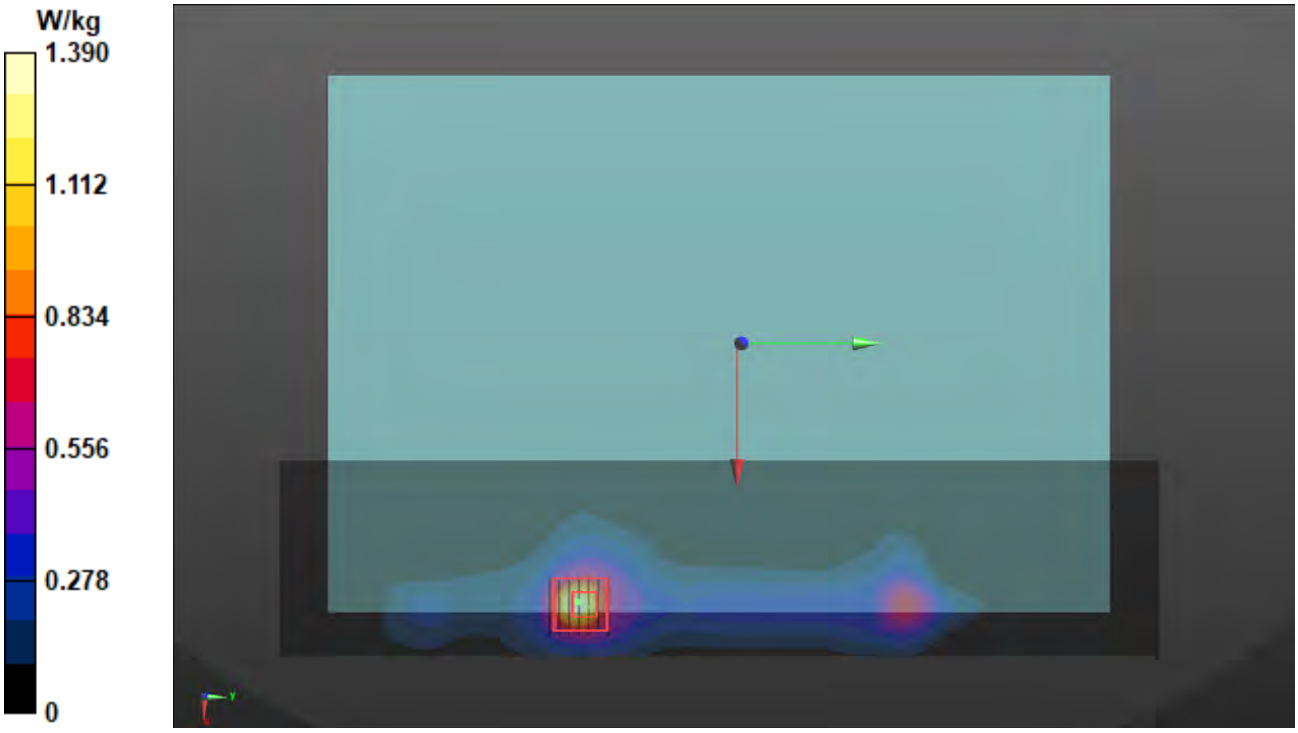

Plots of Measurement

Test Laboratory: Bureau Veritas ADT SAR/HAC Testing Lab Date: 2021/12/17

P05 BT_BDR_Bottom_0mm_Ch0_Ant 0

DUT: P21123538

Communication System: UID 10032 - CAA, IEEE 802.15.1 Bluetooth (GFSK, DH5); Frequency: 2402 MHz;Duty Cycle: 1:1.3
Medium: H19T27N1_1217 Medium parameters used (interpolated): f = 2402 MHz; σ = 1.808 S/m; ε_r = 38.943; ρ = 1000 kg/m^3
Ambient Temperature：23.6 ℃ ; Liquid Temperature：23.4℃

DASY5 Configuration:
- Probe: EX3DV4 - SN7537; ConvF(7.61, 7.61, 7.61) @ 2402 MHz; Calibrated: 2021/04/26
- Sensor-Surface: 1.4mm (Mechanical Surface Detection)
- Electronics: DAE4 Sn1585; Calibrated: 2021/04/15
- Phantom: ELI Phantom_2118; Type: QD OVA 004 AA;
- Measurement SW: DASY52, Version 52.10 (4); SEMCAD X Version 14.6.14 (7483)

Area Scan (71x301x1): Interpolated grid: dx=1.200 mm, dy=1.200 mm
Maximum value of SAR (interpolated) = 0.245 W/kg

Zoom Scan (7x7x7)/Cube 0: Measurement grid: dx=5mm, dy=5mm, dz=5mm
Reference Value = 7.102 V/m; Power Drift = -0.03 dB
Peak SAR (extrapolated) = 0.242 W/kg
SAR(1 g) = 0.066 W/kg; SAR(10 g) = 0.027 W/kg (SAR corrected for target medium)
Smallest distance from peaks to all points 3 dB below = 6.8 mm
Ratio of SAR at M2 to SAR at M1 = 54.6%
Maximum value of SAR (measured) = 0.177 W/kg

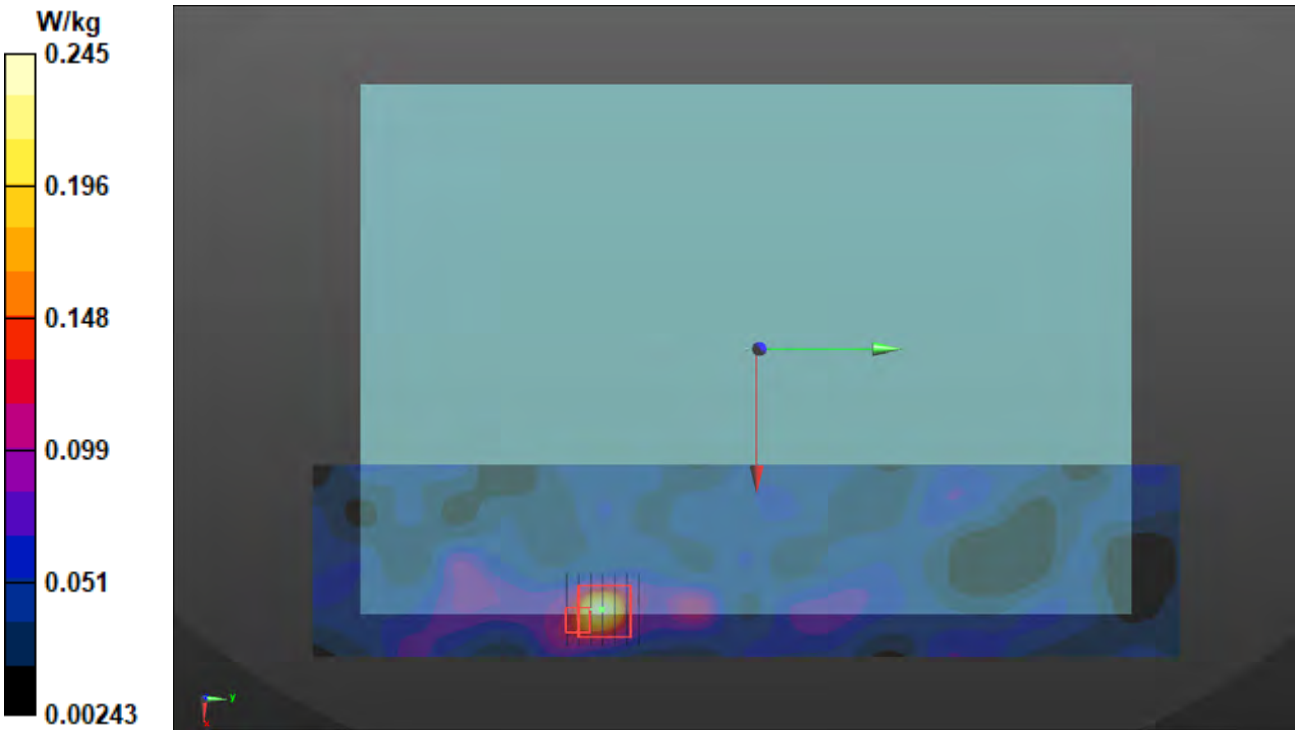

Measurement Report
P06S UNII-7_802.11ax HE160_Bottom_0mm_Ch143_Ant0
Device under Test Properties

Model, Manufacturer	Dimensions [mm]	IMEI	DUT Type
P21123538,	320.0 x 220.0 x 18.0		Laptop

Exposure Conditions

Phantom Section, TSL	Position, Test Distance [mm]	Band	Group, UID	Frequency [MHz], Channel Number	Conversion Factor	TSL Conductivity [S/m]	TSL Permittivity
Flat,	Bottom, 0.00	U-NII-7	WLAN, 10755-AAC	6665.0, 143	5.6	6.35	33.1

Hardware Setup

Phantom	TSL, Measured Date	Probe, Calibration Date	DAE, Calibration Date
ELI V8.0 (20deg probe tilt) - 2105	H50T72N1 , 2021-Dec-20	EX3DV4 - SN3650, 2021-03-26	DAE4 Sn1590, 2021-09-20

Scan Setup

	Area Scan	Zoom Scan
Grid Extents [mm]	85.0 x 340.0	22.0 x 22.0 x 22.0
Grid Steps [mm]	7.5 x 7.5	3.4 x 3.4 x 1.4
Sensor Surface [mm]	3.0	1.4

Measurement Results

	Area Scan	Zoom Scan
Date	2021-12-20	2021-12-20
psSAR1g [W/Kg]	0.110	0.118
psSAR10g [W/Kg]	0.032	0.029
Power Drift [dB]	0.02	0.05

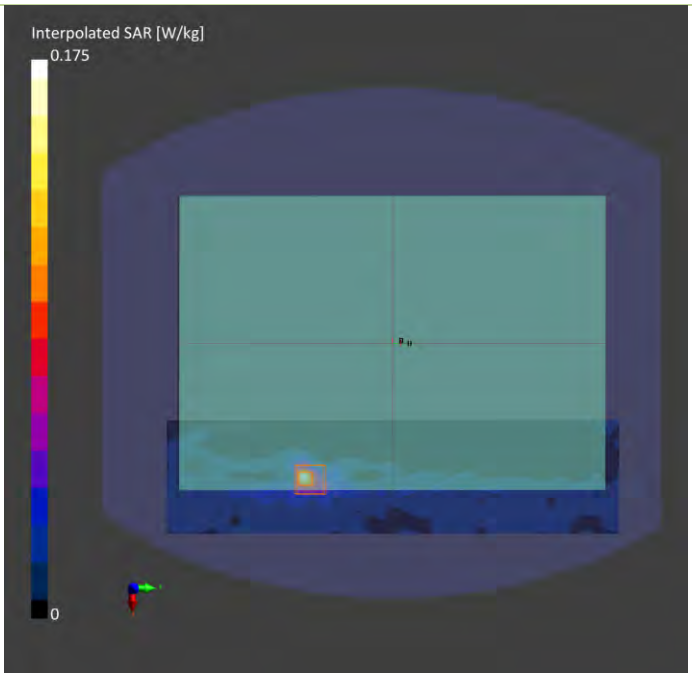

Test Lab: Bureau Veritas ADT SAR/HAC/PD Testing Lab
Power Density Plot No.:
P06P UNII-7_802.11ax HE160_Bottom_0mm_Ch143_Ant0

Device under Test Properties

Name, Manufacturer	Dimensions [mm]	IMEI	DUT Type
P21123538	320.0 x 222.0 x 18.0		Laptop

Exposure Conditions

Phantom Section	Position, Test Distance [mm]	Band	Group, UID	Frequency [MHz], Channel Number	Conversion Factor
5GAir	Bottom 2.00	U-NII-7	WLAN 10755	6665.0 143	1.0

Hardware Setup

Phantom	Medium	Probe, Calibration Date	DAE, Calibration Date
mmWave	Air---	EUmmWV4 - SN9438_F1-55GHz, 2021-07-26	DAE4 Sn1590, 2021-09-20

Scan Setup

	5G Scan
Grid Extents [mm]	120.0 x 120.0
Grid Steps [lambda]	0.25 x 0.25
Sensor Surface [mm]	2.0

Measurement Results

	5G Scan
Date	2021-12-20
Avg. Area [cm^2]	4.00
$pS_{tot}avg$[W/m^2]	0.816
$pS_n avg$ [W/m^2]	0.789
E_{peak} [V/m]	25.5
Power Drift [dB]	0.06

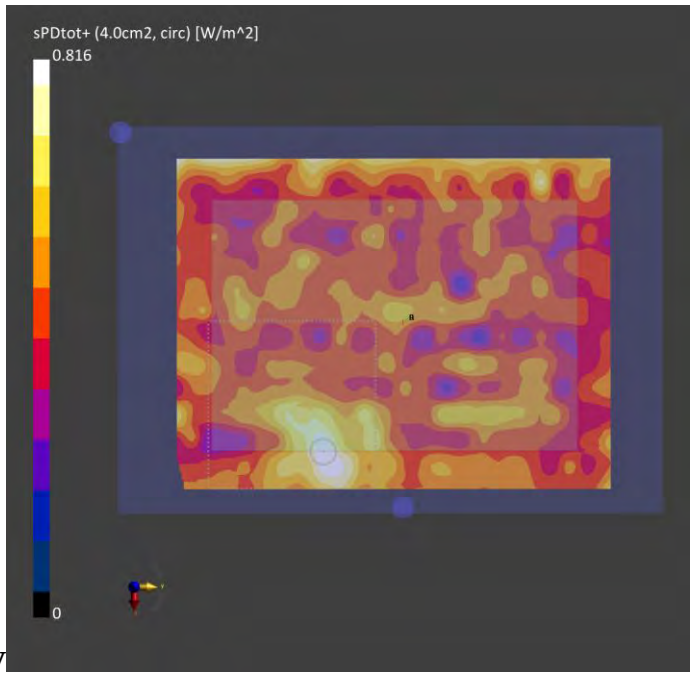

V

Annex C. Tissue & System Verification

The measuring results for tissue simulating liquid and system check are shown as below.

Note:

1. For Section 4.3, the dielectric properties of the tissue simulating liquid have been measured within 24 hours before the SAR testing and within ±10 % of the target values. Liquid temperature during the SAR testing has kept within ±2 ℃.
2. For Section 4.4, The SAR measurement system was validated according to procedures in KDB 865664 D01. The validation status in tabulated summary is as below.
3. For Section 4.5, Comparing to the reference SAR value provided by SPEAG in dipole calibration certificate, the deviation of system check results is within its specification of 10 %. The result indicates the system check can meet the variation criterion and the plots please refer to Annex A of this report.

Tissue Verification									Validation for CW			Validation for Modulation				System Validation					Note			
Plot No.	Frequency (MHz)	Liquid Temp. (℃)	Conductivity (σ)	Permittivity (εr)	Targeted Conductivity (σ)	Targeted Permittivity (εr)	Deviation Conductivity (σ)	Deviation Permittivity (εr)	Sensitivity Range	Probe Linearity	Probe Isotropy	Modulation Type	Duty Factor	PAR	Date	Frequency (MHz)	Targeted 1g SAR (W/kg)	Measured 1g SAR (W/kg)	Normalized 1g SAR (W/kg)	Deviation (%)	Dipole S/N	Probe S/N	DAE S/N	Output Power (dB)
S01	2450	23.4	1.854	38.646	1.8	39.2	3.00	-1.41	Pass	Pass	Pass	OFDM	N/A	Pass	Dec. 17, 2021	2450	52.60	2.61	52.08	-1.00	737	7537	1585	17
S02	5250	23.4	4.79	35.104	4.71	35.9	1.70	-2.22	Pass	Pass	Pass	OFDM	N/A	Pass	Dec. 17, 2021	5250	80.60	4.17	83.20	3.23	1019	7537	1585	17
S03	5600	23.4	5.142	34.62	5.07	35.5	1.42	-2.48	Pass	Pass	Pass	OFDM	N/A	Pass	Dec. 17, 2021	5600	82.40	4.54	90.58	9.93	1019	7537	1585	17
S04	5750	23.4	5.292	34.437	5.22	35.4	1.38	-2.72	Pass	Pass	Pass	OFDM	N/A	Pass	Dec. 17, 2021	5750	79.40	3.98	79.41	0.01	1019	7537	1585	17
S05	2450	23.4	1.854	38.646	1.8	39.2	3.00	-1.41	Pass	Pass	Pass	OFDM	N/A	Pass	Dec. 17, 2021	2450	52.60	2.61	52.08	-1.00	737	7537	1585	17
S06S	6500	23.1	6.1	33.7	6.07	34.5	0.49	-2.32	Pass	Pass	Pass	OFDM	N/A	Pass	Dec. 20, 2021	6500	289.00	26.9	269.00	-6.92	1008	3650	1590	20

Plot No.	Test Date	Frequency [GHz]	mmWave Probe S/N	Verification Source S/N	Averaging Area [cm^2]	Distance [mm]	Target Power Density [W/m^2]	Measured Power Density [W/m^2]	Deviation [%]
S06P	Dec. 20, 2021	10	9438	1025	4	10.0	42.7	42.1	-1.41%

Annex D. Maximum Target Conducted Power

The maximum conducted average power (Unit: dBm) including tune-up tolerance is shown as below.

WLAN Tune-up Power (Full)							
WLAN2.4GHz							
Mode	Channel	Frequency	SISO Ant 1 Max Tune up	SISO Ant 2 Max Tune up	MIMO Ant 1 Tune up	MIMO Ant 2 Tune up	MIMO Ant 1+2 Max Tune up
802.11b	1	2412	19.5	19.5	19.5	19.5	22.5
	6	2437	20.5	20.5	20.5	20.5	23.5
	11	2462	19.5	19.5	19.5	19.5	22.5
	12	2467	18.5	18.5	18.5	18.5	21.5
	13	2472	16.0	16.0	16.0	16.0	19.0
802.11g	1	2412	18.0	18.0	18.0	18.0	21.0
	6	2437	20.5	20.5	20.5	20.5	23.5
	11	2462	18.0	18.0	18.0	18.0	21.0
	12	2467	16.0	16.0	16.0	16.0	19.0
	13	2472	4.0	4.0	4.0	4.0	7.0
802.11n HT20	1	2412	17.5	17.5	17.5	17.5	20.5
	6	2437	19.5	19.5	19.5	19.5	22.5
	11	2462	16.0	16.0	16.0	16.0	19.0
	12	2467	15.0	15.0	15.0	15.0	18.0
	13	2472	3.5	3.5	3.5	3.5	6.5
802.11n HT40	3	2422	15.5	15.5	15.5	15.5	18.5
	6	2437	16.0	16.0	16.0	16.0	19.0
	9	2452	15.0	15.0	15.0	15.0	18.0
	10	2457	14.0	14.0	14.0	14.0	17.0
	11	2462	5.5	5.5	5.5	5.5	8.5
802.11ac VHT20	1	2412	17.5	17.5	17.5	17.5	20.5
	6	2437	19.5	19.5	19.5	19.5	22.5
	11	2462	16.0	16.0	16.0	16.0	19.0
	12	2467	15.0	15.0	15.0	15.0	18.0
	13	2472	3.5	3.5	3.5	3.5	6.5
802.11ac VHT40	3	2422	15.5	15.5	15.5	15.5	18.5
	6	2437	16.0	16.0	16.0	16.0	19.0
	9	2452	15.0	15.0	15.0	15.0	18.0
	10	2457	14.0	14.0	14.0	14.0	17.0
	11	2462	5.5	5.5	5.5	5.5	8.5
802.11ax HE20	1	2412	17.5	17.5	17.5	17.5	20.5
	6	2437	19.5	19.5	19.5	19.5	22.5
	11	2462	16.0	16.0	16.0	16.0	19.0
	12	2467	15.0	15.0	15.0	15.0	18.0
	13	2472	3.5	3.5	3.5	3.5	6.5
802.11ax HE40	3	2422	15.5	15.5	15.5	15.5	18.5
	6	2437	16.0	16.0	16.0	16.0	19.0
	9	2452	15.0	15.0	15.0	15.0	18.0
	10	2457	14.0	14.0	14.0	14.0	17.0
	11	2462	5.5	5.5	5.5	5.5	8.5

WLAN Tune-up Power (Full)			
Bluetooth			
Mode	Channel	Frequency	Max Tune-up
BR / EDR	0	2402	16.0
	39	2441	16.0
	78	2480	16.0
LE	0	2402	7.0
	19	2440	7.0
	39	2480	7.0

WLAN Tune-up Power (Full)							
WLAN 5.2GHz							
Mode	Channel	Frequency	SISO Ant 1 Max Tune up	SISO Ant 2 Max Tune up	MIMO Ant 1 Tune up	MIMO Ant 2 Tune up	MIMO Ant 1+2 Max Tune up
802.11a	36	5180	14.5	14.5	14.5	14.5	17.5
	40	5200	14.5	14.5	14.5	14.5	17.5
	44	5220	14.5	14.5	14.5	14.5	17.5
	48	5240	14.5	14.5	14.5	14.5	17.5
802.11n HT20	36	5180	14.5	14.5	14.5	14.5	17.5
	40	5200	14.5	14.5	14.5	14.5	17.5
	44	5220	14.5	14.5	14.5	14.5	17.5
	48	5240	14.5	14.5	14.5	14.5	17.5
802.11n HT40	38	5190	15.0	15.0	15.0	15.0	18.0
	46	5230	15.0	15.0	15.0	15.0	18.0
802.11ac VHT20	36	5180	14.5	14.5	14.5	14.5	17.5
	40	5200	14.5	14.5	14.5	14.5	17.5
	44	5220	14.5	14.5	14.5	14.5	17.5
	48	5240	14.5	14.5	14.5	14.5	17.5
802.11ac VHT40	38	5190	15.0	15.0	15.0	15.0	18.0
	46	5230	15.0	15.0	15.0	15.0	18.0
802.11ac VHT80	42	5210	13.0	13.0	13.0	13.0	16.0
802.11ax HE20	36	5180	14.5	14.5	14.5	14.5	17.5
	40	5200	14.5	14.5	14.5	14.5	17.5
	44	5220	14.5	14.5	14.5	14.5	17.5
	48	5240	14.5	14.5	14.5	14.5	17.5
802.11ax HE40	38	5190	15.0	15.0	15.0	15.0	18.0
	46	5230	15.0	15.0	15.0	15.0	18.0
802.11ax HE80	42	5210	13.0	13.0	13.0	13.0	16.0
802.11ax HE160	50	5250	13.0	13.0	13.0	13.0	16.0

WLAN Tune-up Power (Full)							
WLAN 5.3GHz							
Mode	Channel	Frequency	SISO Ant 1 Max Tune up	SISO Ant 2 Max Tune up	MIMO Ant 1 Tune up	MIMO Ant 2 Tune up	MIMO Ant 1+2 Max Tune up
802.11a	52	5260	16.0	16.0	16.0	16.0	19.0
	56	5280	19.0	19.0	19.0	19.0	22.0
	60	5300	19.0	19.0	19.0	19.0	22.0
	64	5320	16.0	16.0	16.0	16.0	19.0
802.11n HT20	52	5260	16.0	16.0	16.0	16.0	19.0
	56	5280	17.5	17.5	17.5	17.5	20.5
	60	5300	17.5	17.5	17.5	17.5	20.5
	64	5320	16.0	16.0	16.0	16.0	19.0
802.11n HT40	54	5270	17.0	17.0	17.0	17.0	20.0
	62	5310	15.5	15.5	15.5	15.5	18.5
802.11ac VHT20	52	5260	16.0	16.0	16.0	16.0	19.0
	56	5280	17.5	17.5	17.5	17.5	20.5
	60	5300	17.5	17.5	17.5	17.5	20.5
	64	5320	16.0	16.0	16.0	16.0	19.0
802.11ac VHT40	54	5270	17.0	17.0	17.0	17.0	20.0
	62	5310	15.5	15.5	15.5	15.5	18.5
802.11ac VHT80	58	5290	14.0	14.0	14.0	14.0	17.0
802.11ax HE20	52	5260	16.0	16.0	16.0	16.0	19.0
	56	5280	17.5	17.5	17.5	17.5	20.5
	60	5300	17.5	17.5	17.5	17.5	20.5
	64	5320	16.0	16.0	16.0	16.0	19.0
802.11ax HE40	54	5270	17.0	17.0	17.0	17.0	20.0
	62	5310	15.5	15.5	15.5	15.5	18.5
802.11ax HE80	58	5290	14.0	14.0	14.0	14.0	17.0

WLAN Tune-up Power (Full)							
WLAN 5.6GHz							
Mode	Channel	Frequency	SISO Ant 1 Max Tune up	SISO Ant 2 Max Tune up	MIMO Ant 1 Tune up	MIMO Ant 2 Tune up	MIMO Ant 1+2 Max Tune up
802.11a	100	5500	16.0	16.0	16.0	16.0	19.0
	116	5580	18.5	18.5	18.5	18.5	21.5
	120	5600	18.5	18.5	18.5	18.5	21.5
	124	5620	18.5	18.5	18.5	18.5	21.5
	132	5660	18.5	18.5	18.5	18.5	21.5
	140	5700	16.0	16.0	16.0	16.0	19.0
	144	5720	19.0	19.0	19.0	19.0	22.0
802.11n HT20	100	5500	16.0	16.0	16.0	16.0	19.0
	116	5580	17.5	17.5	17.5	17.5	20.5
	120	5600	17.5	17.5	17.5	17.5	20.5
	124	5620	17.5	17.5	17.5	17.5	20.5
	132	5660	17.5	17.5	17.5	17.5	20.5
	140	5700	16.0	16.0	16.0	16.0	19.0
	144	5720	17.5	17.5	17.5	17.5	20.5
802.11n HT40	102	5510	15.5	15.5	15.5	15.5	18.5
	110	5550	17.0	17.0	17.0	17.0	20.0
	118	5590	17.0	17.0	17.0	17.0	20.0
	126	5630	17.0	17.0	17.0	17.0	20.0
	134	5670	15.5	15.5	15.5	15.5	18.5
	142	5710	17.0	17.0	17.0	17.0	20.0
802.11ac VHT20	100	5500	16.0	16.0	16.0	16.0	19.0
	116	5580	17.5	17.5	17.5	17.5	20.5
	120	5600	17.5	17.5	17.5	17.5	20.5
	124	5620	17.5	17.5	17.5	17.5	20.5
	132	5660	17.5	17.5	17.5	17.5	20.5
	140	5700	16.0	16.0	16.0	16.0	19.0
	144	5720	17.5	17.5	17.5	17.5	20.5
802.11ac VHT40	102	5510	15.5	15.5	15.5	15.5	18.5
	110	5550	17.0	17.0	17.0	17.0	20.0
	118	5590	17.0	17.0	17.0	17.0	20.0
	126	5630	17.0	17.0	17.0	17.0	20.0
	134	5670	15.5	15.5	15.5	15.5	18.5
	142	5710	17.0	17.0	17.0	17.0	20.0
802.11ac VHT80	106	5530	15.0	15.0	15.0	15.0	18.0
	122	5610	15.0	15.0	15.0	15.0	18.0
	138	5690	15.0	15.0	15.0	15.0	18.0
802.11ax HE20	100	5500	16.0	16.0	16.0	16.0	19.0
	116	5580	17.5	17.5	17.5	17.5	20.5
	120	5600	17.5	17.5	17.5	17.5	20.5
	124	5620	17.5	17.5	17.5	17.5	20.5
	132	5660	17.5	17.5	17.5	17.5	20.5
	140	5700	16.0	16.0	16.0	16.0	19.0
	144	5720	17.5	17.5	17.5	17.5	20.5
802.11ax HE40	102	5510	15.5	15.5	15.5	15.5	18.5
	110	5550	17.0	17.0	17.0	17.0	20.0
	118	5590	17.0	17.0	17.0	17.0	20.0
	126	5630	17.0	17.0	17.0	17.0	20.0
	134	5670	15.5	15.5	15.5	15.5	18.5
	142	5710	17.0	17.0	17.0	17.0	20.0
802.11ax HE80	106	5530	15.0	15.0	15.0	15.0	18.0
	122	5610	15.0	15.0	15.0	15.0	18.0
	138	5690	15.0	15.0	15.0	15.0	18.0
802.11ax HE160	114	5570	14.0	14.0	14.0	14.0	17.0

WLAN Tune-up Power (Full)							
WLAN 5.8GHz							
Mode	Channel	Frequency	SISO Ant 1 Max Tune up	SISO Ant 2 Max Tune up	MIMO Ant 1 Tune up	MIMO Ant 2 Tune up	MIMO Ant 1+2 Max Tune up
802.11a	149	5745	19.0	19.0	19.0	19.0	22.0
	153	5765	19.0	19.0	19.0	19.0	22.0
	157	5785	19.0	19.0	19.0	19.0	22.0
	161	5805	19.0	19.0	19.0	19.0	22.0
	165	5825	19.0	19.0	19.0	19.0	22.0
802.11n HT20	149	5745	17.5	17.5	17.5	17.5	20.5
	153	5765	17.5	17.5	17.5	17.5	20.5
	157	5785	17.5	17.5	17.5	17.5	20.5
	161	5805	17.5	17.5	17.5	17.5	20.5
	165	5825	17.5	17.5	17.5	17.5	20.5
802.11n HT40	151	5755	17.0	17.0	17.0	17.0	20.0
	159	5795	17.0	17.0	17.0	17.0	20.0
802.11ac VHT20	149	5745	17.5	17.5	17.5	17.5	20.5
	153	5765	17.5	17.5	17.5	17.5	20.5
	157	5785	17.5	17.5	17.5	17.5	20.5
	161	5805	17.5	17.5	17.5	17.5	20.5
	165	5825	17.5	17.5	17.5	17.5	20.5
802.11ac VHT40	151	5755	17.0	17.0	17.0	17.0	20.0
	159	5795	17.0	17.0	17.0	17.0	20.0
802.11ac VHT80	155	5775	16.5	16.5	16.5	16.5	19.5
802.11ax HE20	149	5745	17.5	17.5	17.5	17.5	20.5
	153	5765	17.5	17.5	17.5	17.5	20.5
	157	5785	17.5	17.5	17.5	17.5	20.5
	161	5805	17.5	17.5	17.5	17.5	20.5
	165	5825	17.5	17.5	17.5	17.5	20.5
802.11ax HE40	151	5755	17.0	17.0	17.0	17.0	20.0
	159	5795	17.0	17.0	17.0	17.0	20.0
802.11ax HE80	155	5775	16.5	16.5	16.5	16.5	19.5

WLAN Tune-up Power (Full)							
UNII-5							
Mode	Channel	Frequency	SISO Ant 1 Max Tune up	SISO Ant 2 Max Tune up	MIMO Ant 1 Tune up	MIMO Ant 2 Tune up	MIMO Ant 1+2 Max Tune up
802.11a	1	5955	-0.5	-0.5	-0.5	-0.5	2.5
	5	5975	-0.5	-0.5	-0.5	-0.5	2.5
	9	5995	1.5	1.5	1.5	1.5	4.5
	13	6015	1.5	1.5	1.5	1.5	4.5
	17	6035	1.5	1.5	1.5	1.5	4.5
	21	6055	1.5	1.5	1.5	1.5	4.5
	25	6075	1.5	1.5	1.5	1.5	4.5
	29	6095	1.5	1.5	1.5	1.5	4.5
	33	6115	1.5	1.5	1.5	1.5	4.5
	37	6135	1.5	1.5	1.5	1.5	4.5
	41	6155	1.5	1.5	1.5	1.5	4.5
	45	6175	1.5	1.5	1.5	1.5	4.5
	49	6195	1.5	1.5	1.5	1.5	4.5
	53	6215	1.5	1.5	1.5	1.5	4.5
	57	6235	1.5	1.5	1.5	1.5	4.5
	61	6255	1.5	1.5	1.5	1.5	4.5
	65	6275	1.5	1.5	1.5	1.5	4.5
	69	6295	1.5	1.5	1.5	1.5	4.5
	73	6315	1.5	1.5	1.5	1.5	4.5
	77	6335	1.5	1.5	1.5	1.5	4.5
	81	6355	1.5	1.5	1.5	1.5	4.5
	85	6375	1.5	1.5	1.5	1.5	4.5
	89	6395	1.5	1.5	1.5	1.5	4.5
	93	6415	1.5	1.5	1.5	1.5	4.5
802.11ax HE20	1	5955	-3.5	-3.5	-3.5	-3.5	-0.5
	5	5975	-3.5	-3.5	-3.5	-3.5	-0.5
	9	5995	2.5	2.5	2.5	2.5	5.5
	13	6015	2.5	2.5	2.5	2.5	5.5
	17	6035	2.5	2.5	2.5	2.5	5.5
	21	6055	2.5	2.5	2.5	2.5	5.5
	25	6075	2.5	2.5	2.5	2.5	5.5
	29	6095	2.5	2.5	2.5	2.5	5.5
	33	6115	2.5	2.5	2.5	2.5	5.5
	37	6135	2.5	2.5	2.5	2.5	5.5
	41	6155	2.5	2.5	2.5	2.5	5.5
	45	6175	2.5	2.5	2.5	2.5	5.5
	49	6195	2.5	2.5	2.5	2.5	5.5
	53	6215	2.5	2.5	2.5	2.5	5.5
	57	6235	2.5	2.5	2.5	2.5	5.5
	61	6255	2.5	2.5	2.5	2.5	5.5
	65	6275	2.5	2.5	2.5	2.5	5.5
	69	6295	2.5	2.5	2.5	2.5	5.5
	73	6315	2.5	2.5	2.5	2.5	5.5
	77	6335	2.5	2.5	2.5	2.5	5.5
	81	6355	2.5	2.5	2.5	2.5	5.5
	85	6375	2.5	2.5	2.5	2.5	5.5
	89	6395	2.5	2.5	2.5	2.5	5.5
	93	6415	2.5	2.5	2.5	2.5	5.5

WLAN Tune-up Power (Full)							
UNII-5							
Mode	Channel	Frequency	SISO Ant 1 Max Tune up	SISO Ant 2 Max Tune up	MIMO Ant 1 Tune up	MIMO Ant 2 Tune up	MIMO Ant 1+2 Max Tune up
802.11ax HE40	3	5965	5.5	5.5	5.5	5.5	8.5
	11	6005	5.5	5.5	5.5	5.5	8.5
	19	6045	5.5	5.5	5.5	5.5	8.5
	27	6085	5.5	5.5	5.5	5.5	8.5
	35	6125	5.5	5.5	5.5	5.5	8.5
	43	6165	5.5	5.5	5.5	5.5	8.5
	51	6205	5.5	5.5	5.5	5.5	8.5
	59	6245	5.5	5.5	5.5	5.5	8.5
	67	6285	5.5	5.5	5.5	5.5	8.5
	75	6325	5.5	5.5	5.5	5.5	8.5
	83	6365	5.5	5.5	5.5	5.5	8.5
	91	6405	5.5	5.5	5.5	5.5	8.5
802.11ax HE80	7	5985	8.5	8.5	8.5	8.5	11.5
	23	6065	8.5	8.5	8.5	8.5	11.5
	39	6145	8.5	8.5	8.5	8.5	11.5
	55	6225	8.5	8.5	8.5	8.5	11.5
	71	6305	8.5	8.5	8.5	8.5	11.5
	87	6385	8.5	8.5	8.5	8.5	11.5
802.11ax HE160	15	6025	9.0	9.0	9.0	9.0	12.0
	47	6185	9.0	9.0	9.0	9.0	12.0
	79	6345	9.0	9.0	9.0	9.0	12.0

WLAN Tune-up Power (Full)							
UNII-6							
Mode	Channel	Frequency	SISO Ant 1 Max Tune up	SISO Ant 2 Max Tune up	MIMO Ant 1 Tune up	MIMO Ant 2 Tune up	MIMO Ant 1+2 Max Tune up
802.11a	97	6435	1.5	1.5	1.5	1.5	4.5
	101	6455	1.5	1.5	1.5	1.5	4.5
	105	6475	1.5	1.5	1.5	1.5	4.5
	109	6495	1.5	1.5	1.5	1.5	4.5
	113	6515	1.5	1.5	1.5	1.5	4.5
	117	6535	1.5	1.5	1.5	1.5	4.5
802.11ax HE20	97	6435	2.5	2.5	2.5	2.5	5.5
	101	6455	2.5	2.5	2.5	2.5	5.5
	105	6475	2.5	2.5	2.5	2.5	5.5
	109	6495	2.5	2.5	2.5	2.5	5.5
	113	6515	2.5	2.5	2.5	2.5	5.5
	117	6535	2.5	2.5	2.5	2.5	5.5
802.11ax HE40	99	6445	5.5	5.5	5.5	5.5	8.5
	107	6485	5.5	5.5	5.5	5.5	8.5
	115	6525	5.5	5.5	5.5	5.5	8.5
802.11ax HE80	103	6465	8.5	8.5	8.5	8.5	11.5
	119	6545	8.5	8.5	8.5	8.5	11.5
802.11ax HE160	111	6505	9.0	9.0	9.0	9.0	12.0

WLAN Tune-up Power (Full)							
UNII-7							
Mode	Channel	Frequency	SISO Ant 1 Max Tune up	SISO Ant 2 Max Tune up	MIMO Ant 1 Tune up	MIMO Ant 2 Tune up	MIMO Ant 1+2 Max Tune up
802.11a	121	6555	1.5	1.5	1.5	1.5	4.5
	125	6575	1.5	1.5	1.5	1.5	4.5
	129	6595	1.5	1.5	1.5	1.5	4.5
	133	6615	1.5	1.5	1.5	1.5	4.5
	137	6635	1.5	1.5	1.5	1.5	4.5
	141	6655	1.5	1.5	1.5	1.5	4.5
	145	6675	1.5	1.5	1.5	1.5	4.5
	149	6695	1.5	1.5	1.5	1.5	4.5
	153	6715	1.5	1.5	1.5	1.5	4.5
	157	6735	1.5	1.5	1.5	1.5	4.5
	161	6755	1.5	1.5	1.5	1.5	4.5
	165	6775	1.5	1.5	1.5	1.5	4.5
	169	6795	1.5	1.5	1.5	1.5	4.5
	173	6815	1.5	1.5	1.5	1.5	4.5
	177	6835	1.5	1.5	1.5	1.5	4.5
	181	6855	1.5	1.5	1.5	1.5	4.5
	185	6875	1.5	1.5	1.5	1.5	4.5
802.11ax HE20	121	6555	2.5	2.5	2.5	2.5	5.5
	125	6575	2.5	2.5	2.5	2.5	5.5
	129	6595	2.5	2.5	2.5	2.5	5.5
	133	6615	2.5	2.5	2.5	2.5	5.5
	137	6635	2.5	2.5	2.5	2.5	5.5
	141	6655	2.5	2.5	2.5	2.5	5.5
	145	6675	2.5	2.5	2.5	2.5	5.5
	149	6695	2.5	2.5	2.5	2.5	5.5
	153	6715	2.5	2.5	2.5	2.5	5.5
	157	6735	2.5	2.5	2.5	2.5	5.5
	161	6755	2.5	2.5	2.5	2.5	5.5
	165	6775	2.5	2.5	2.5	2.5	5.5
	169	6795	2.5	2.5	2.5	2.5	5.5
	173	6815	2.5	2.5	2.5	2.5	5.5
	177	6835	2.5	2.5	2.5	2.5	5.5
	181	6855	2.5	2.5	2.5	2.5	5.5
	185	6875	2.5	2.5	2.5	2.5	5.5
802.11ax HE40	123	6565	5.5	5.5	5.5	5.5	8.5
	131	6605	5.5	5.5	5.5	5.5	8.5
	139	6645	5.5	5.5	5.5	5.5	8.5
	147	6685	5.5	5.5	5.5	5.5	8.5
	155	6725	5.5	5.5	5.5	5.5	8.5
	163	6765	5.5	5.5	5.5	5.5	8.5
	171	6805	5.5	5.5	5.5	5.5	8.5
	179	6845	5.5	5.5	5.5	5.5	8.5
	187	6885	5.5	5.5	5.5	5.5	8.5
802.11ax HE80	135	6625	8.5	8.5	8.5	8.5	11.5
	151	6705	8.5	8.5	8.5	8.5	11.5
	167	6785	8.5	8.5	8.5	8.5	11.5
	183	6865	8.5	8.5	8.5	8.5	11.5
802.11ax HE160	143	6665	9.0	9.0	9.0	9.0	12.0
	175	6825	9.0	9.0	9.0	9.0	12.0

WLAN Tune-up Power (Full)							
UNII-8							
Mode	Channel	Frequency	SISO Ant 1 Max Tune up	SISO Ant 2 Max Tune up	MIMO Ant 1 Tune up	MIMO Ant 2 Tune up	MIMO Ant 1+2 Max Tune up
802.11a	189	6895	1.5	1.5	1.5	1.5	4.5
	193	6915	1.5	1.5	1.5	1.5	4.5
	197	6935	1.5	1.5	1.5	1.5	4.5
	201	6955	1.5	1.5	1.5	1.5	4.5
	205	6975	1.5	1.5	1.5	1.5	4.5
	209	6995	1.5	1.5	1.5	1.5	4.5
	213	7015	1.5	1.5	1.5	1.5	4.5
	217	7035	1.5	1.5	1.5	1.5	4.5
	221	7055	1.5	1.5	1.5	1.5	4.5
	225	7075	1.5	1.5	1.5	1.5	4.5
	229	7095	1.5	1.5	1.5	1.5	4.5
	233	7115	1.0	1.0	1.0	1.0	4.0
802.11ax HE20	189	6895	2.5	2.5	2.5	2.5	5.5
	193	6915	2.5	2.5	2.5	2.5	5.5
	197	6935	2.5	2.5	2.5	2.5	5.5
	201	6955	2.5	2.5	2.5	2.5	5.5
	205	6975	2.5	2.5	2.5	2.5	5.5
	209	6995	2.5	2.5	2.5	2.5	5.5
	213	7015	2.5	2.5	2.5	2.5	5.5
	217	7035	2.5	2.5	2.5	2.5	5.5
	221	7055	2.5	2.5	2.5	2.5	5.5
	225	7075	2.5	2.5	2.5	2.5	5.5
	229	7095	2.5	2.5	2.5	2.5	5.5
	233	7115	-1.0	-1.0	-1.0	-1.0	2.0
802.11ax HE40	195	6925	5.5	5.5	5.5	5.5	8.5
	203	6965	5.5	5.5	5.5	5.5	8.5
	211	7005	5.5	5.5	5.5	5.5	8.5
	219	7045	5.5	5.5	5.5	5.5	8.5
	227	7085	5.5	5.5	5.5	5.5	8.5
802.11ax HE80	199	6945	8.5	8.5	8.5	8.5	11.5
	215	7025	8.5	8.5	8.5	8.5	11.5
802.11ax HE160	207	6985	9.0	9.0	9.0	9.0	12.0

Annex E. Measured Conducted Power Result

The measuring conducted power (Unit: dBm) are shown as below.

WLAN Conducted Power (Full)			
WLAN2.4GHz Ant 0			
Mode	Channel	Frequency	SISO Ant 0 Avg. Power
802.11b	1	2412	19.38
	6	2437	20.41
	11	2462	19.41
	12	2467	18.28
	13	2472	15.94

Bluetooth Ant 0			
Mode	Channel	Frequency	SISO Ant 0 Avg. Power
BR / EDR	0	2402	15.93
	39	2441	15.17
	78	2480	14.13
LE	0	2402	6.73
	19	2440	6.52
	39	2480	6.45

WLAN 5.3GHz Ant 0			
Mode	Channel	Frequency	SISO Ant 0 Avg. Power
802.11a	52	5260	15.81
	56	5280	18.86
	60	5300	18.89
	64	5320	15.98

WLAN 5.6GHz Ant 0			
Mode	Channel	Frequency	SISO Ant 0 Avg. Power
802.11a	100	5500	15.97
	116	5580	18.39
	120	5600	18.41
	124	5620	18.44
	132	5660	18.38
	140	5700	15.87
	144	5720	18.95

WLAN 5.8GHz Ant 0			
Mode	Channel	Frequency	SISO Ant 0 Avg. Power
802.11a	149	5745	18.81
	153	5765	18.93
	157	5785	18.96
	161	5805	18.87
	165	5825	18.98

WLAN Conducted Power (Full)			
UNII-5 Ant 0			
Mode	Channel	Frequency	SISO Ant 0 Avg. Power
802.11ax HE160	15	6025	8.75
	47	6185	8.72
	79	6345	8.55

UNII-6 Ant 0			
Mode	Channel	Frequency	SISO Ant 0 Avg. Power
802.11ax HE160	111	6505	8.65

UNII-7 Ant 0			
Mode	Channel	Frequency	SISO Ant 0 Avg. Power
802.11ax HE160	143	6665	8.42
	175	6825	8.74

UNII-8 Ant 0			
Mode	Channel	Frequency	SISO Ant 0 Avg. Power
802.11ax HE160	207	6985	8.62

WLAN Conducted Power (Full)			
WLAN2.4GHz Ant 1			
Mode	Channel	Frequency	SISO Ant 1 Avg. Power
802.11b	1	2412	19.38
	6	2437	20.31
	11	2462	19.35
	12	2467	18.47
	13	2472	15.81

WLAN 5.3GHz Ant 1			
Mode	Channel	Frequency	SISO Ant 1 Avg. Power
802.11a	52	5260	15.59
	56	5280	18.94
	60	5300	18.97
	64	5320	15.76

WLAN 5.6GHz Ant 1			
Mode	Channel	Frequency	SISO Ant 1 Avg. Power
802.11a	100	5500	15.93
	116	5580	18.37
	120	5600	18.41
	124	5620	18.42
	132	5660	18.32
	140	5700	15.95
	144	5720	18.88

WLAN 5.8GHz Ant 1			
Mode	Channel	Frequency	SISO Ant 1 Avg. Power
802.11a	149	5745	18.88
	153	5765	18.92
	157	5785	18.91
	161	5805	18.93
	165	5825	18.95

WLAN Conducted Power (Full)			
UNII-5 Ant 1			
Mode	Channel	Frequency	SISO Ant 1 Avg. Power
802.11ax HE160	15	6025	8.98
	47	6185	8.81
	79	6345	8.93

UNII-6 Ant 1			
Mode	Channel	Frequency	SISO Ant 1 Avg. Power
802.11ax HE160	111	6505	8.98

UNII-7 Ant 1			
Mode	Channel	Frequency	SISO Ant 1 Avg. Power
802.11ax HE160	143	6665	8.97
	175	6825	8.36

UNII-8 Ant 1			
Mode	Channel	Frequency	SISO Ant 1 Avg. Power
802.11ax HE160	207	6985	8.89

WLAN Conducted Power (Full)					
WLAN2.4GHz Ant 0+1					
Mode	Channel	Frequency	MIMO Ant 0 Avg. Power	MIMO Ant 1 Avg. Power	MIMO Ant 0+1 Avg. Power
802.11b	1	2412	18.96	18.53	21.76
	6	2437	20.48	20.21	23.36
	11	2462	18.81	18.33	21.59
	12	2467	18.31	17.89	21.12
	13	2472	15.98	15.51	18.76

WLAN 5.3GHz Ant 0+1					
Mode	Channel	Frequency	MIMO Ant 0 Avg. Power	MIMO Ant 1 Avg. Power	MIMO Ant 0+1 Avg. Power
802.11a	52	5260	15.58	15.97	18.79
	56	5280	18.94	18.92	21.94
	60	5300	18.94	18.95	21.96
	64	5320	15.16	15.95	18.58

WLAN 5.6GHz Ant 0+1					
Mode	Channel	Frequency	MIMO Ant 0 Avg. Power	MIMO Ant 1 Avg. Power	MIMO Ant 0+1 Avg. Power
802.11a	100	5500	15.97	15.93	18.96
	116	5580	18.32	18.41	21.38
	120	5600	18.31	18.36	21.35
	124	5620	18.41	18.39	21.41
	132	5660	18.39	18.45	21.43
	140	5700	15.96	15.99	18.99
	144	5720	18.95	18.83	21.9

WLAN 5.8GHz Ant 0+1					
Mode	Channel	Frequency	MIMO Ant 0 Avg. Power	MIMO Ant 1 Avg. Power	MIMO Ant 0+1 Avg. Power
802.11a	149	5745	18.9	18.82	21.87
	153	5765	18.94	18.94	21.95
	157	5785	18.93	18.97	21.96
	161	5805	18.97	18.99	21.99
	165	5825	18.95	18.88	21.93

WLAN Conducted Power (Full)					
UNII-5 Ant 0+1					
Mode	Channel	Frequency	MIMO Ant 0 Avg. Power	MIMO Ant 1 Avg. Power	MIMO Ant 0+1 Avg. Power
802.11ax HE160	15	6025	8.75	8.98	11.88
	47	6185	8.72	8.81	11.78
	79	6345	8.55	8.93	11.75

UNII-6 Ant 0+1					
Mode	Channel	Frequency	MIMO Ant 0 Avg. Power	MIMO Ant 1 Avg. Power	MIMO Ant 0+1 Avg. Power
802.11ax HE160	111	6505	8.65	8.98	11.83

UNII-7 Ant 0+1					
Mode	Channel	Frequency	MIMO Ant 0 Avg. Power	MIMO Ant 1 Avg. Power	MIMO Ant 0+1 Avg. Power
802.11ax HE160	143	6665	8.42	8.97	11.71
	175	6825	8.93	8.36	11.66

UNII-8 Ant 0+1					
Mode	Channel	Frequency	MIMO Ant 0 Avg. Power	MIMO Ant 1 Avg. Power	MIMO Ant 0+1 Avg. Power
802.11ax HE160	207	6985	8.85	8.89	11.88

Annex F. SAR and Power Density Test Result

SAR Results for Body Exposure Condition.

Note:
1. SAR testing for WLAN was performed on the maximum power mode.

Body SAR Test Result														
System & Position						DUT & Accessory	SAR							
Plot No.	Band	Mode	Test Position	Separation Distance (mm)	Channel	Ant Status	Duty Cycle	Crest Factor	Max. Tune-up Power (dBm)	Measured Conducted Power (dBm)	Scaling Factor	Power Drift (dB)	Measured SAR-1g (W/kg)	Scaled SAR-1g (W/kg)
	WLAN2.4G	802.11b	Bottom	0	6	Ant 0	97.00	1.03	20.50	20.41	1.02	-0.08	0.672	0.71
	WLAN2.4G	802.11b	Bottom	0	6	Ant 1	97.00	1.03	20.50	20.31	1.04	0.03	0.415	0.44
	WLAN2.4G	802.11b	Bottom	0	6	Ant 0+1	99.90	1.00	23.50	23.36	1.03	0.07	0.713	0.73
1	WLAN2.4G	802.11b	Bottom	0	1	Ant 0+1	99.90	1.00	22.50	21.76	1.19	-0.01	0.721	0.86
	WLAN2.4G	802.11b	Bottom	0	11	Ant 0+1	99.90	1.00	22.50	21.59	1.23	-0.03	0.653	0.80
	WLAN2.4G	802.11b	Bottom	0	12	Ant 0+1	99.90	1.00	21.50	21.12	1.09	-0.05	0.549	0.60
	WLAN2.4G	802.11b	Bottom	0	13	Ant 0+1	99.90	1.00	19.00	18.76	1.06	0.04	0.322	0.34
	WLAN5.3G	802.11a	Bottom	0	60	Ant 0	96.40	1.04	19.00	18.89	1.03	0.07	0.528	0.57
	WLAN5.3G	802.11a	Bottom	0	60	Ant 1	97.00	1.03	19.00	18.97	1.01	-0.01	0.669	0.70
	WLAN5.3G	802.11a	Bottom	0	60	Ant 0+1	84.60	1.18	22.00	21.96	1.01	-0.06	0.571	0.68
	WLAN5.3G	802.11a	Bottom	0	52	Ant 1	97.00	1.03	16.00	15.59	1.10	0.02	0.492	0.56
2	WLAN5.3G	802.11a	Bottom	0	56	Ant 1	97.00	1.03	19.00	18.94	1.01	0.15	0.791	0.82
	WLAN5.3G	802.11a	Bottom	0	64	Ant 1	97.00	1.03	16.00	15.76	1.06	0.05	0.277	0.30
3	WLAN5.6G	802.11a	Bottom	0	144	Ant 0	96.40	1.04	19.00	18.95	1.01	-0.04	0.803	0.84
	WLAN5.6G	802.11a	Bottom	0	144	Ant 1	97.00	1.03	19.00	18.88	1.03	0.06	0.434	0.46
	WLAN5.6G	802.11a	Bottom	0	144	Ant 0+1	84.60	1.18	22.00	21.90	1.02	0.04	0.684	0.82
	WLAN5.6G	802.11a	Bottom	0	100	Ant 0	84.60	1.18	16.00	15.97	1.01	0.05	0.442	0.53
	WLAN5.6G	802.11a	Bottom	0	116	Ant 0	84.60	1.18	18.50	18.39	1.03	0.01	0.679	0.83
	WLAN5.6G	802.11a	Bottom	0	120	Ant 0	84.60	1.18	18.50	18.41	1.02	-0.03	0.665	0.80
	WLAN5.6G	802.11a	Bottom	0	124	Ant 0	84.60	1.18	18.50	18.44	1.01	0.02	0.679	0.81
	WLAN5.6G	802.11a	Bottom	0	132	Ant 0	84.60	1.18	18.50	18.38	1.03	-0.06	0.649	0.79
	WLAN5.6G	802.11a	Bottom	0	140	Ant 0	84.60	1.18	16.00	15.87	1.03	-0.07	0.587	0.71
	WLAN5.6G	802.11a	Bottom	0	144	Ant 0	96.40	1.04	19.00	18.95	1.01	-0.17	0.781	0.82
	WLAN5.8G	802.11a	Bottom	0	165	Ant 0	96.40	1.04	19.00	18.98	1.00	-0.06	0.62	0.64
	WLAN5.8G	802.11a	Bottom	0	165	Ant 1	97.00	1.03	19.00	18.95	1.01	-0.05	0.44	0.46
4	WLAN5.8G	802.11a	Bottom	0	161	Ant 0+1	84.60	1.18	22.00	21.99	1.00	-0.01	0.723	0.85
	WLAN5.8G	802.11a	Bottom	0	149	Ant 0+1	84.60	1.18	22.00	21.87	1.03	-0.04	0.692	0.84
	WLAN5.8G	802.11a	Bottom	0	153	Ant 0+1	84.60	1.18	22.00	21.95	1.01	-0.1	0.704	0.84
	WLAN5.8G	802.11a	Bottom	0	157	Ant 0+1	84.60	1.18	22.00	21.96	1.01	0.03	0.659	0.79
	WLAN5.8G	802.11a	Bottom	0	165	Ant 0+1	84.60	1.18	22.00	21.93	1.02	-0.03	0.605	0.73
5	BT	BDR	Bottom	0	0	Ant 0	76.80	1.30	16.00	15.93	1.02	-0.03	0.066	0.09
	BT	BDR	Bottom	0	39	Ant 0	76.80	1.30	16.00	15.17	1.21	0.09	0.051	0.08
	BT	BDR	Bottom	0	78	Ant 0	76.80	1.30	16.00	14.13	1.54	-0.07	0.038	0.08

SAR and Power Density Test Result																								
System & Position						DUT & Accessory	SAR									Power Density								
Plot No.	Band	Mode	Test Position	Separation Distance (mm)	Channel	Ant Status	Duty Cycle	Crest Factor	Max. Tune-up Power (dBm)	Measured Conducted Power (dBm)	Scaling Factor	Power Drift (dB)	Measured SAR-1g (W/kg)	Scaled SAR-1g (W/kg)	Measured APD W/m^2 (4cm^2)	Grid Step [λ]	iPD [W/m2]	Scaling Factor for Measurement Uncertainty	Averaging Area [cm2]	Power Drift [dB]	Normal psPD [W/m2]	Scaled Normal psPD [W/m2]	Total psPD [W/m2]	Scaled Total psPD [W/m2]
	UNII-5	802.11ax HE160	Bottom	0	15	Ant 0	86.8	1.15	9.00	8.75	1.06	0.05	0.087	0.11	0.377									
	UNII-6	802.11ax HE160	Bottom	0	111	Ant 1	86.5	1.16	9.00	8.98	1.00	-0.15	0.072	0.08	0.946									
	UNII-8	802.11ax HE160	Bottom	0	207	Ant 0+1	85.6	1.17	12.00	11.88	1.03	0.05	0.069	0.08	0.828									
	UNII-5	802.11ax HE160	Bottom	0	47	Ant 0	86.8	1.15	9.00	8.72	1.07	0.01	0.069	0.08	0.375									
	UNII-5	802.11ax HE160	Bottom	0	79	Ant 0	86.8	1.15	9.00	8.55	1.11	0.04	0.088	0.11	0.688	0.25	5.14	1.55	4.00	0.01	0.512	0.91	0.519	0.92
	UNII-6	802.11ax HE160	Bottom	0	111	Ant 0	86.8	1.15	9.00	8.65	1.08	-0.03	0.093	0.12	0.728	0.25	2.91	1.55	4.00	-0.15	0.374	0.66	0.395	0.7
6	UNII-7	802.11ax HE160	Bottom	0	143	Ant 0	86.8	1.15	9.00	8.42	1.14	0.05	0.118	0.15	1.03	0.25	3.65	1.55	4.00	0.06	0.789	1.40	0.816	1.45
	UNII-7	802.11ax HE160	Bottom	0	175	Ant 0	86.8	1.15	9.00	8.74	1.06	0.03	0.117	0.14	0.765	0.25	4.23	1.55	4.00	-0.05	0.782	1.39	0.809	1.44
	UNII-8	802.11ax HE160	Bottom	0	207	Ant 0	86.8	1.15	9.00	8.62	1.09	-0.08	0.114	0.14	0.859	0.25	3.50	1.55	4.00	0.07	0.488	0.87	0.667	1.19

Annex G. SAR Measurement Variability

SAR repeated measurement are shown as below.

Repeat SAR							
Plot	Band	Mode	Test Position	Ch.	Original Measured SAR-1g (W/kg)	1st Repeated SAR-1g (W/kg)	L/S Ratio
R03	WLAN5.6G	802.11a	Bottom	144	0.803	0.781	1.03

Annex H. Analysis of Simultaneous Transmission SAR

The analysis of simultaneous transmission are shown as below

<Possibilities of Simultaneous Transmission>

The simultaneous transmission possibilities for this device are listed as below.

Simultaneous TX Combination	Capable Transmit Configurations	Body Exposure Condition
A	WLAN 2.4G_Ant 1 + BT_Ant 0	Yes
B	WLAN 2.4G - MIMO	Yes
C	WLAN 5G_Ant 1 + BT_Ant 0	Yes
D	WLAN 5G - MIMO	Yes
E	WLAN 5G - MIMO + BT_Ant 0	Yes
F	WLAN 6G_Ant 1 + BT_Ant 0	Yes
G	WLAN 6G - MIMO	Yes
H	WLAN 6G - MIMO + BT_Ant 0	Yes
I	WLAN 2.4G_Ant 0 + WLAN 5G_Ant 1	Yes
J	WLAN 2.4G_Ant 1 + WLAN 5G_Ant 1	Yes
K	WLAN 2.4G_Ant 0 + WLAN 6G_Ant 1	Yes
L	WLAN 2.4G_Ant 1 + WLAN 6G_Ant 1	Yes
Notes	1. Simultaneous TX Combination C and D Can be covered by E 2. Simultaneous TX Combination F and G Can be covered by H	

Simultaneous Transmission SAR Evaluation																				
Position	1	2	3	4	5	6	7	8	9	10	11	12	13	A (2+13)	E (8+13)	H (12+13)	I (1+6)	J (2+6)	K (1+10)	L (2+10)
	Max WLAN 2.4GHz Ant 0	Max WLAN 2.4GHz Ant 1	Max WLAN 2.4GHz Ant 0+1	Max WLAN 2.4GHz	Max WLAN 5GHz Ant 0	Max WLAN 5GHz Ant 1	Max WLAN 5GHz Ant 0+1	Max WLAN 5GHz	Max WLAN 6G Ant 0	Max WLAN 6G Ant 1	Max WLAN 6G Ant 0+1	Max WLAN 6G	Max BT Ant 0	Summimg result 1g SAR W/kg	Summimg result 1g SAR W/kg	Summimg result 1g SAR W/kg	Summimg result 1g SAR W/kg	Summimg result 1g SAR W/kg	Summimg result 1g SAR W/kg	Summimg result 1g SAR W/kg
	1g SAR W/kg	1g SAR W/kg	1g SAR W/kg	1g SAR W/kg	1g SAR W/kg	1g SAR W/kg	1g SAR W/kg	1g SAR W/kg	1g SAR W/kg	1g SAR W/kg	1g SAR W/kg	1g SAR W/kg	1g SAR W/kg							
Bottom	0.71	0.44	0.86	0.86	0.84	0.82	0.85	0.85	0.15	0.08	0.08	0.15	0.09	0.53	0.94	0.24	1.53	1.26	0.79	0.52

Annex I. SAR to Peak Location Separation Ratio Analysis.

Since sum of simultaneous transmission SAR is less than the SAR limit for Body : SAR_{1g} 1.6 W/kg .
There is no requirement for SAR to Peak Location Separation Ratio Analysis.

Annex J. Calibration of Test Equipment List

Calibration of Test Equipment List are shown as below.

Equipment for SAR Test					
Equipment	Manufacturer	Model	SN	Cal. Date	Cal. Interval
System Validation Dipole	SPEAG	D2450V2	737	Aug. 26, 2021	1 Year
System Validation Dipole	SPEAG	D5GHzV2	1019	Mar. 19, 2021	1 Year
System Validation Dipole	SPEAG	D6.5GHzV2	1008	Sep. 24, 2021	1 Year
System Verification Source	SPEAG	5G Verification Source 10 GHz	1025	Jan. 19, 2021	1 Year
Dosimetric E-Field Probe	SPEAG	EX3DV4	7537	Apr. 26, 2021	1 Year
Dosimetric E-Field Probe	SPEAG	EX3DV4	3650	Mar. 26, 2021	1 Year
E-Field Probe	SPEAG	EUmmWV4	9438	Jul. 26, 2021	1 Year
Data Acquisition Electronics	SPEAG	DAE4	1585	Apr. 15, 2021	1 Year
Data Acquisition Electronics	SPEAG	DAE4	1590	Sep. 20, 2021	1 Year
Spectrum Analyzer	R&S	FSL6	102006	Apr. 06, 2021	1 Year
Universal Wireless Test Set	Anritsu	MT8870A/MU887000A	6201699387	Sep. 22, 2021	1 Year
Thermometer	YFE	YF-160A	191100743	Apr. 12, 2021	1 Year
Dielectric Assessment Kit	SPEAG	DAKS-3.5	1151	Jul. 14, 2021	1 Year
Powersource1	SPEAG	SE_UMS_160 BA	4010	Jul. 13, 2021	1 Year

Annex K. Considerations Related to Bluetooth for Setup and Testing

This device has installed Bluetooth engineering testing software which can provide continuous transmitting RF signal. During Bluetooth SAR testing, this device was operated to transmit continuously at the maximum transmission duty with specified transmission mode, operating frequency, lowest data rate, and maximum output power.

The Bluetooth call box has been used during SAR measurement and the EUT was set to DH5 mode at the maximum output power. Its duty factor was calculated as below and the measured SAR for Bluetooth would be scaled to the 100% transmission duty factor to determine compliance.

The duty factor of Bluetooth signal are shown as below.

<Time-domain plot for Bluetooth transmission signal>

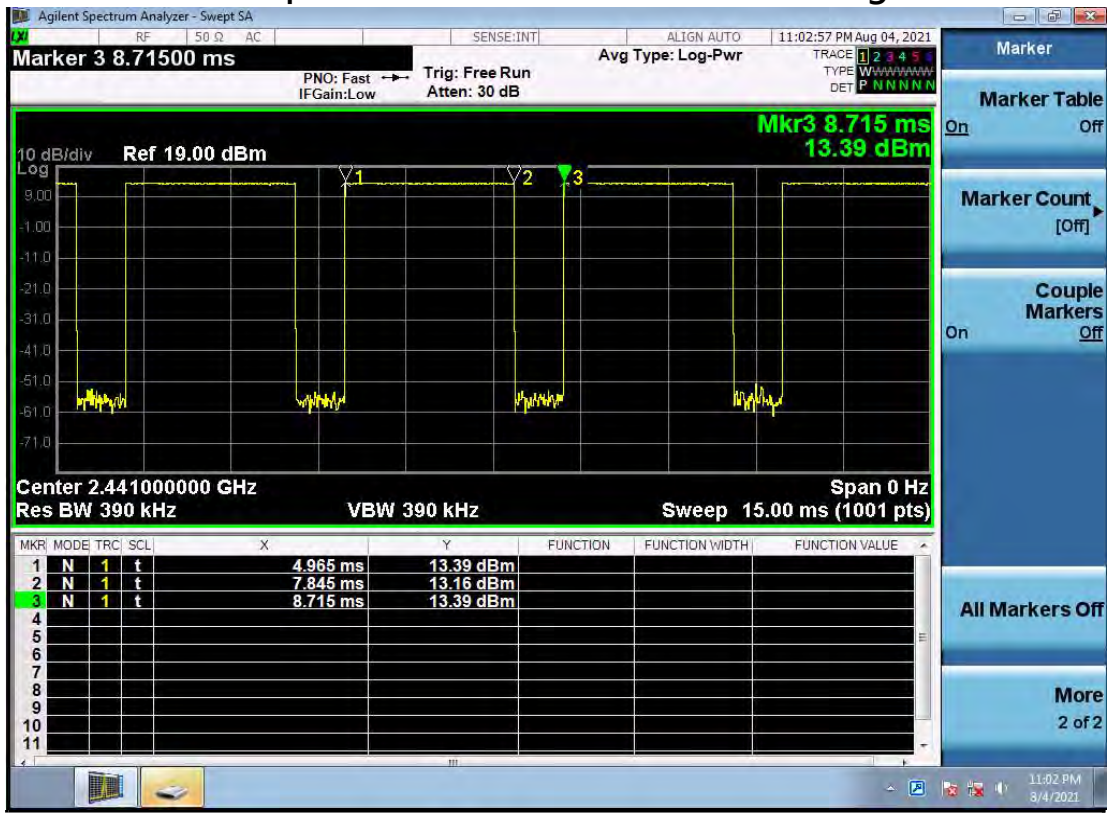

Time-domain plot for Bluetooth transmission signal

The duty factor of Bluetooth signal has been calculated as following.

Duty Factor = Pulse Width / Total Period = (7.845 - 4.965) / (8.715 - 4.965) = 76.80%