Internal Photos

WBU058-BGA-V11 Pic 1

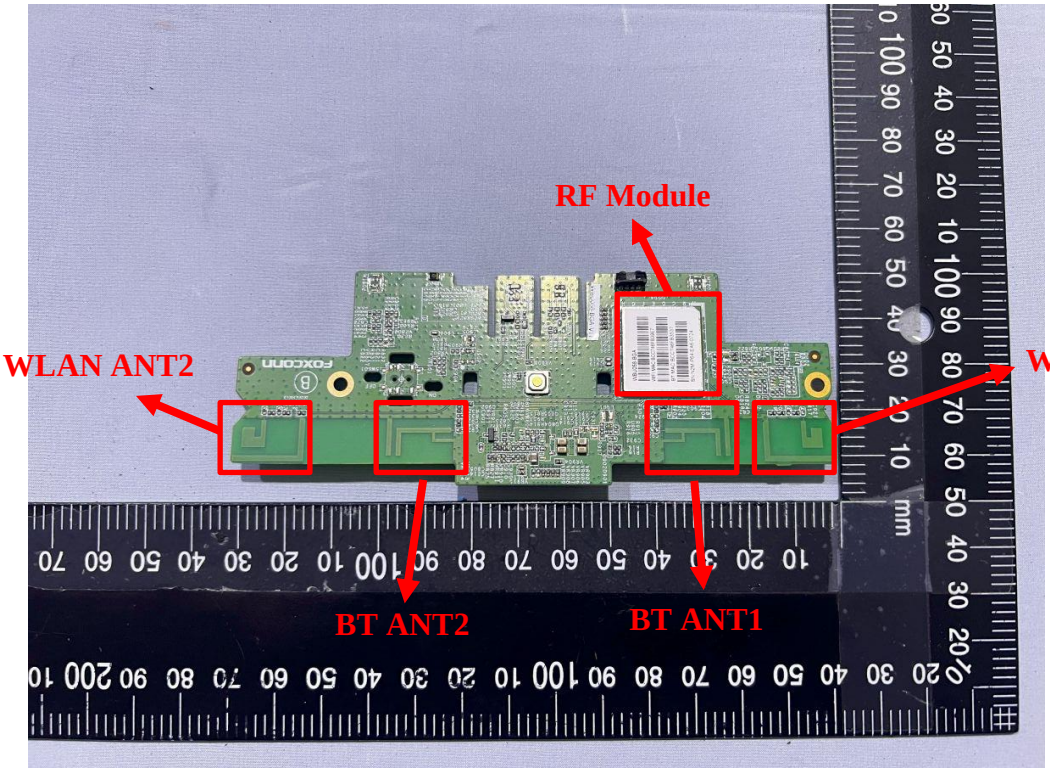

WBU058-BGA-V11 Pic 2

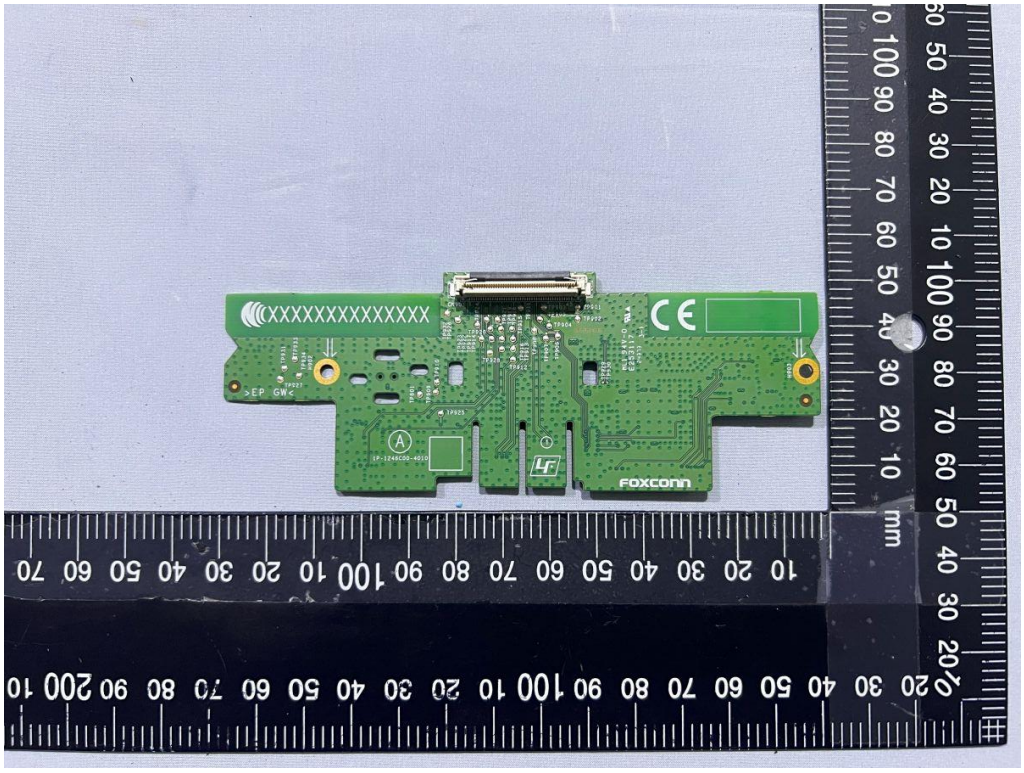

WBU058-BGA-V11 Pic 3

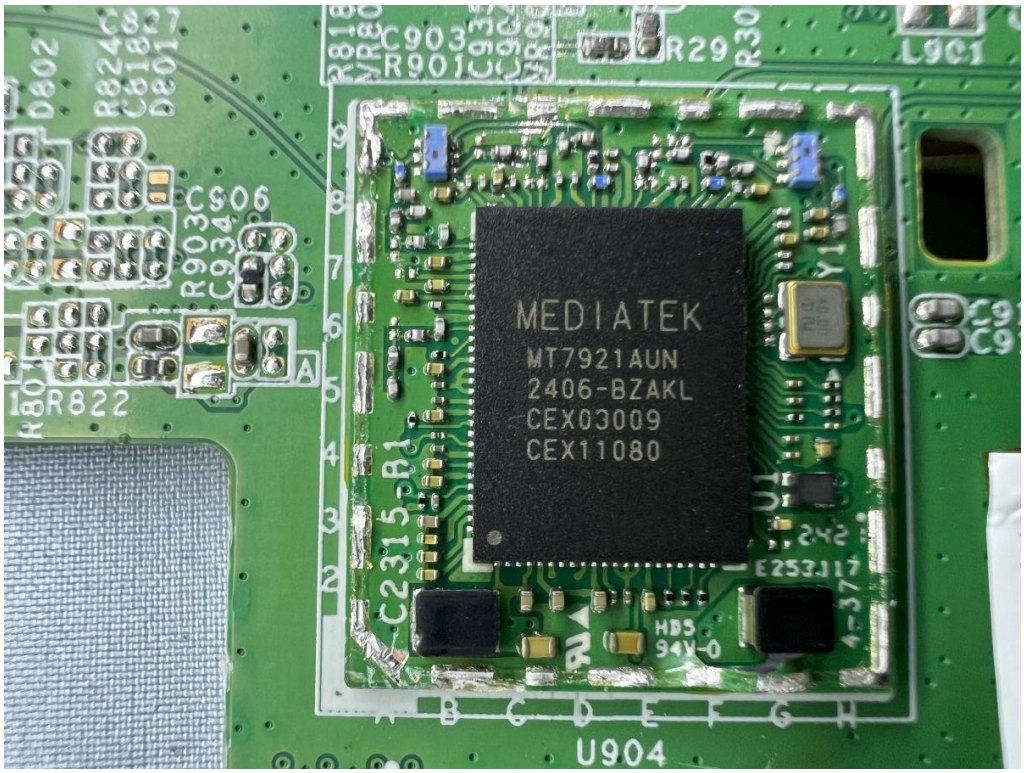

WBU058-BGA-V13 Pic 1

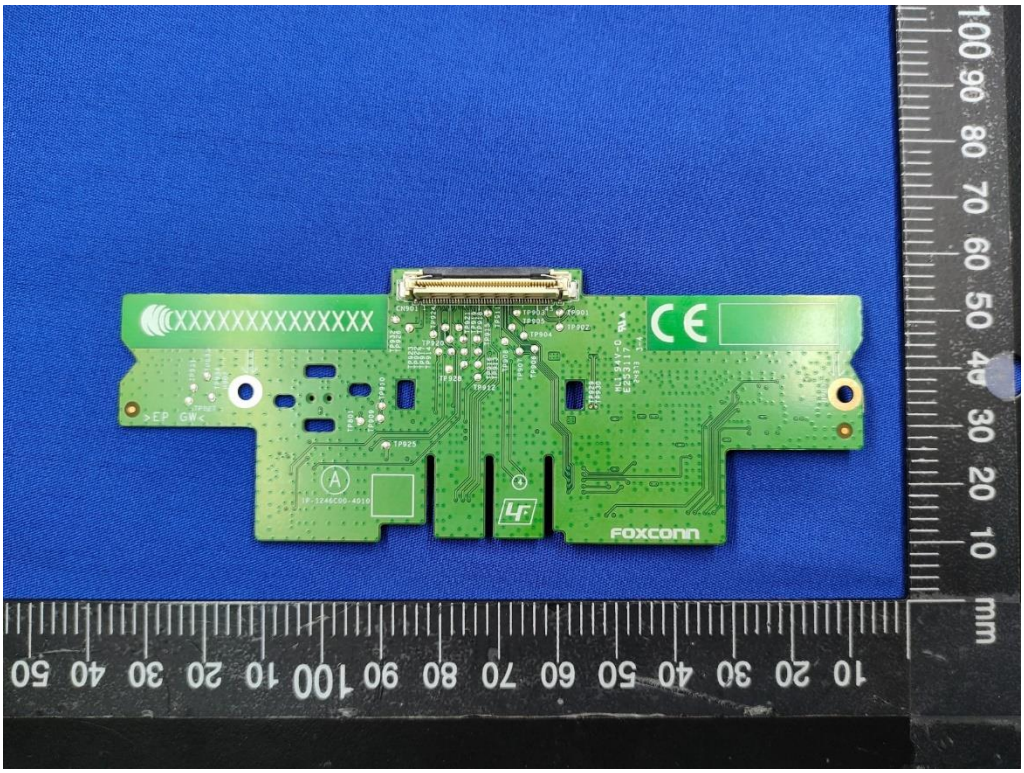

WBU058-BGA-V13 Pic 2

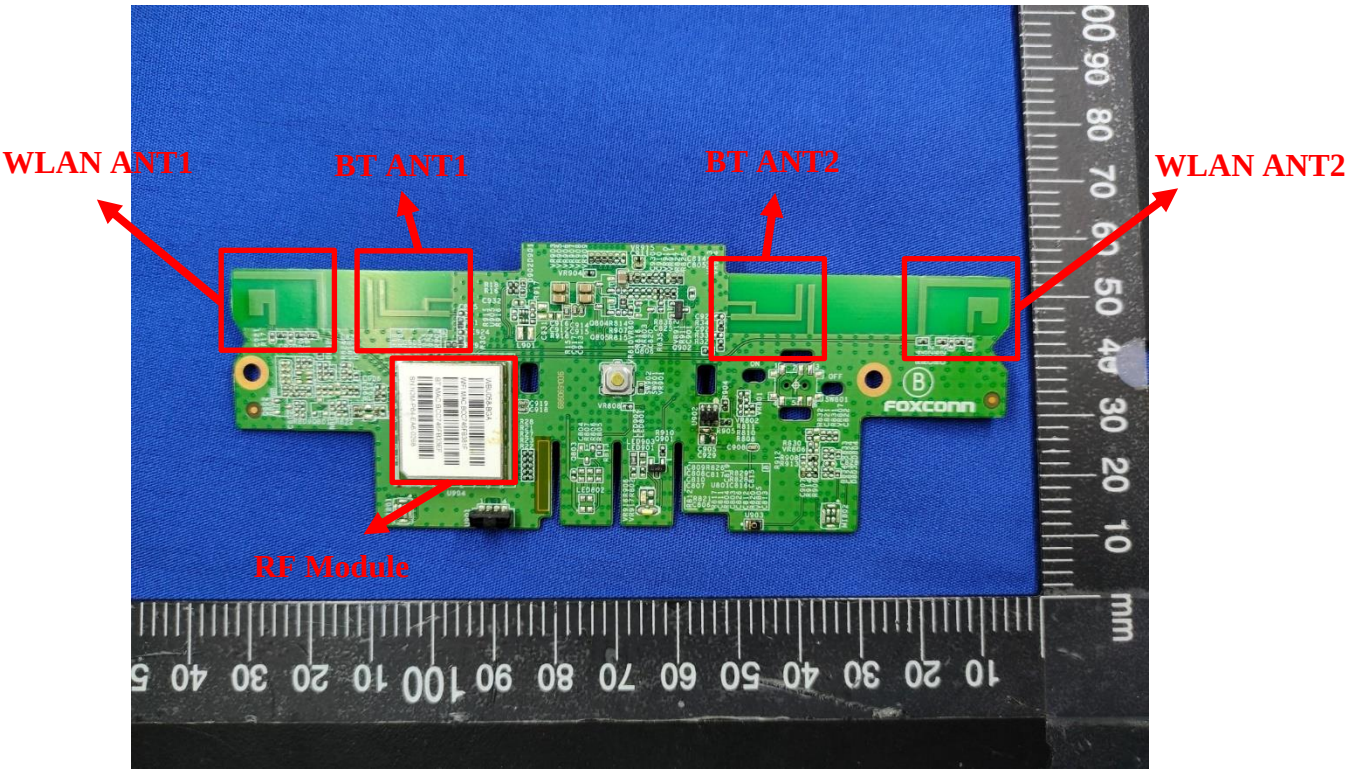

WBU058-BGA-V13 Pic 3

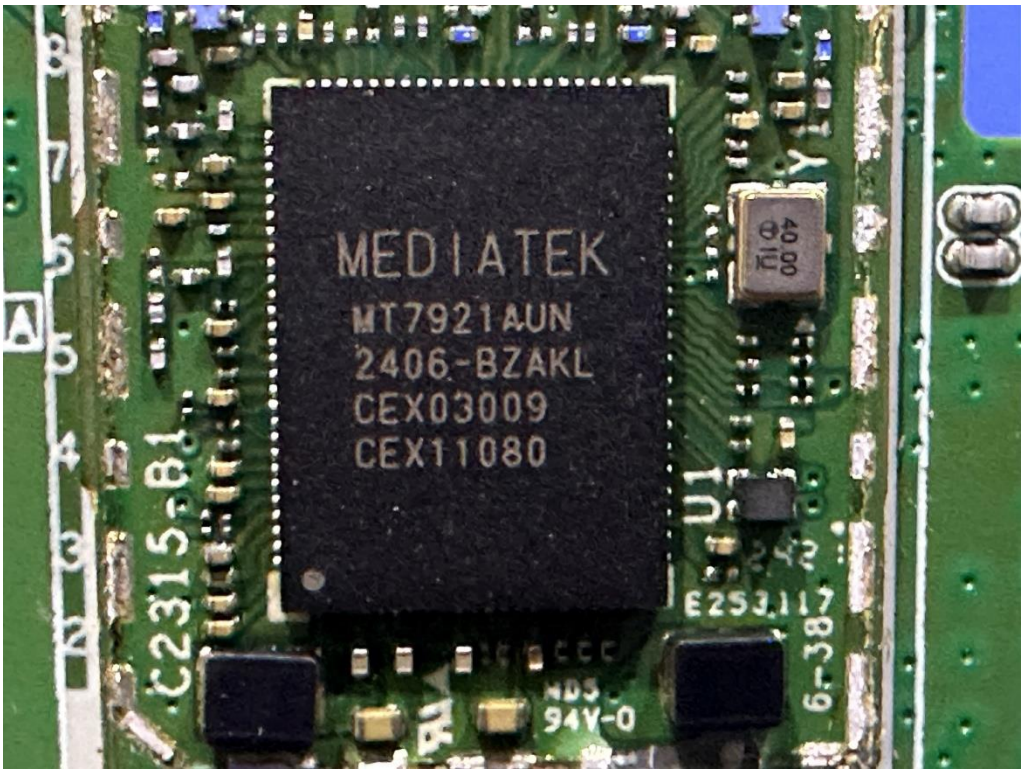

Underwriters Laboratories Taiwan Co., Ltd.
Building A, B and E, No. 372-7, Sec. 4, Zhongxing Rd., Zhudong Township, Hsinchu County, Taiwan
Telephone :+886-2-7737-3000
Facsimile (FAX) :+886-3-583-7948

WBU058-BGA-V15 Pic 1

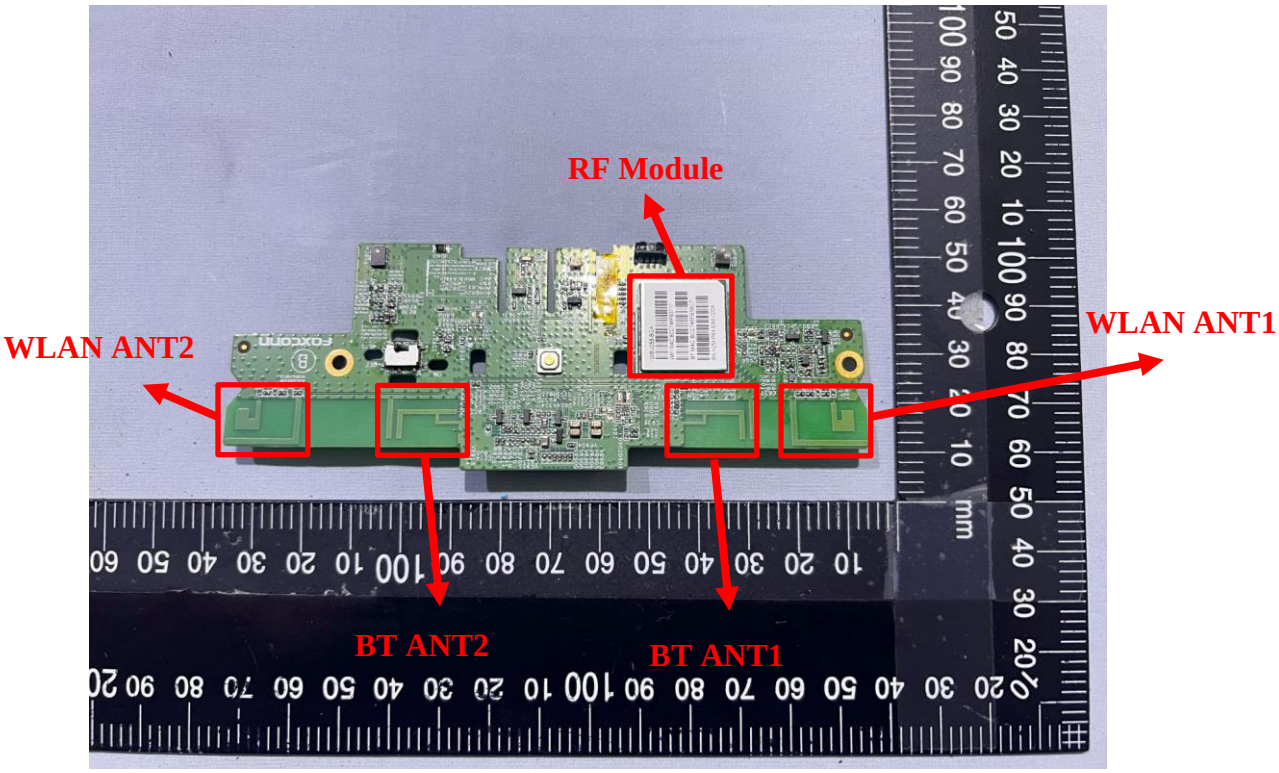

WBU058-BGA-V15 Pic 2

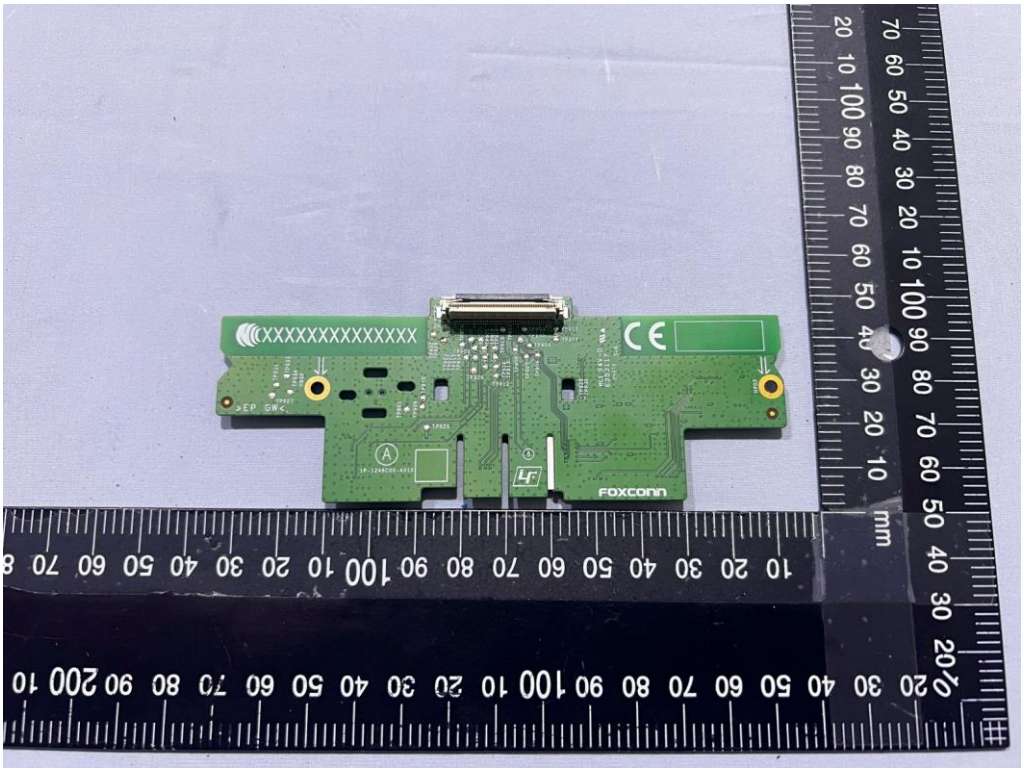

Underwriters Laboratories Taiwan Co., Ltd.
Building A, B and E, No. 372-7, Sec. 4, Zhongxing Rd., Zhudong Township, Hsinchu County, Taiwan
Telephone :+886-2-7737-3000
Facsimile (FAX) :+886-3-583-7948
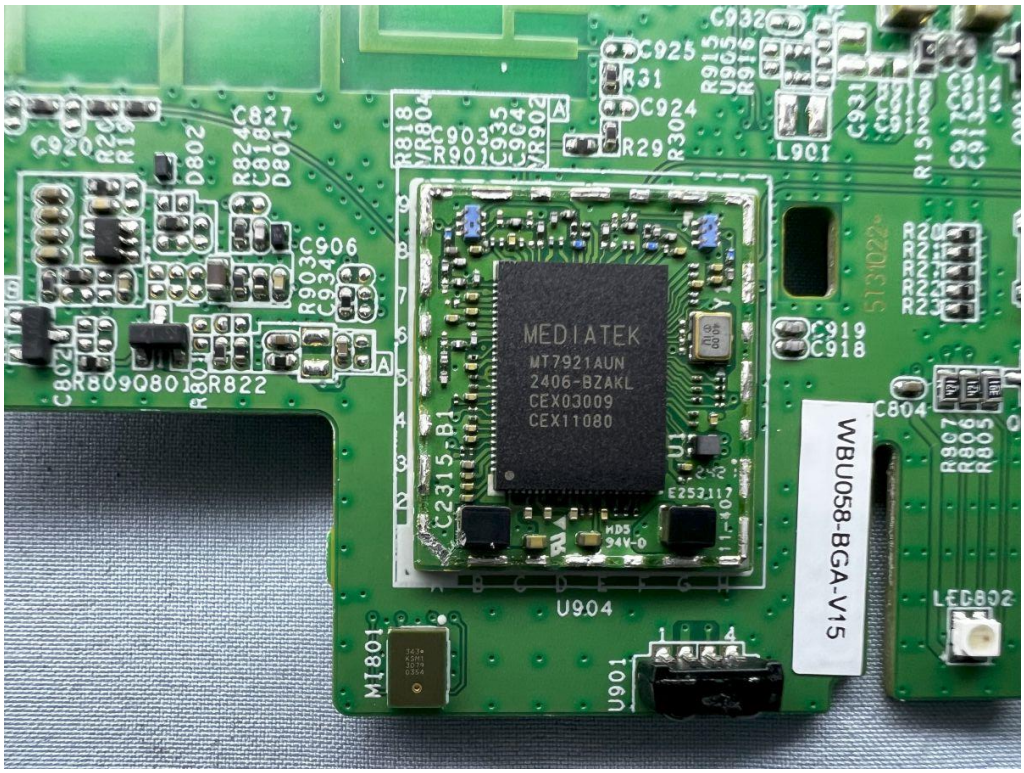
WBU058-BGA-V15 Pic 3