WBU063-VZ

802.11a/b/g/n/ac WLAN 2T2R + BT v5.1 Combo Module

Product Specification 3.0

Approved:	Approved:	Prepared by:
_____	_____	_____
Zeke Wu Manager	Ben Ho Supervisor	Kevin Engineer

Revision History

Date	Number	Approver	Comments
2021/09/08	1.0	Cathy Kuo	Initial Released
2021/09/08	2.0	Cathy Kuo	Modified Page 12 BLE RF Power
2021/09/15	3.0	Cathy Kuo	Updated page 18~22 Regulatory statement

RESTRICTED AND CONFIDENTIAL INFORMATION STATEMENT
All information contained in this document is the exclusive property of Foxconn Technology Inc. and its development partners. Any reproduction or disclosure of all or part of this document without the expressed written consent of Foxconn Technology Inc. is strictly prohibited.

CHAPTER1: MODULE OVERVIEW

The Foxconn WBU063-VZ is a highly integrated module which features a low power 2x2 11a/b/g/n/ac dual-band Wi-Fi subsystem and a Bluetooth subsystem. The Wi-Fi subsystem contains the 802.11a/b/g/n/ac radio, baseband, and MAC that are designed to meet both the low power and high throughput application.

WBU063-VZ has a 32-bit RISC MCU that handles Wi-Fi and Bluetooth tasks. The Bluetooth subsystem contains the Bluetooth radio, baseband, link controller. It also uses the 32-bit RISC MCU for the Bluetooth protocols.

1-1 Key Characteristic

- 32-bits RISC MCU for Wi-Fi protocols
- IEEE 802.11 a/b/g/n/ac compliant
- Support 20MHz、40MHz in 2.4GHz band, 20MHz/40MHz/80MHz in 5GHz band
- Dual-band 2T2R mode with data rate up to 867Mbps
- Integrated LNA, PA, and T/R switch
- Security support for WFA WPA/WPA2/WPA3 personal, WPS2.0
- Bluetooth integrated BALUN and PA with class 1 transmit power.
- USB device fully compliant to USB v3.0 specification
- Supports Bluetooth 5 dual mode for 2x the speed.
- Supports BT/WiFi coexistence

1-3 Pin Definition

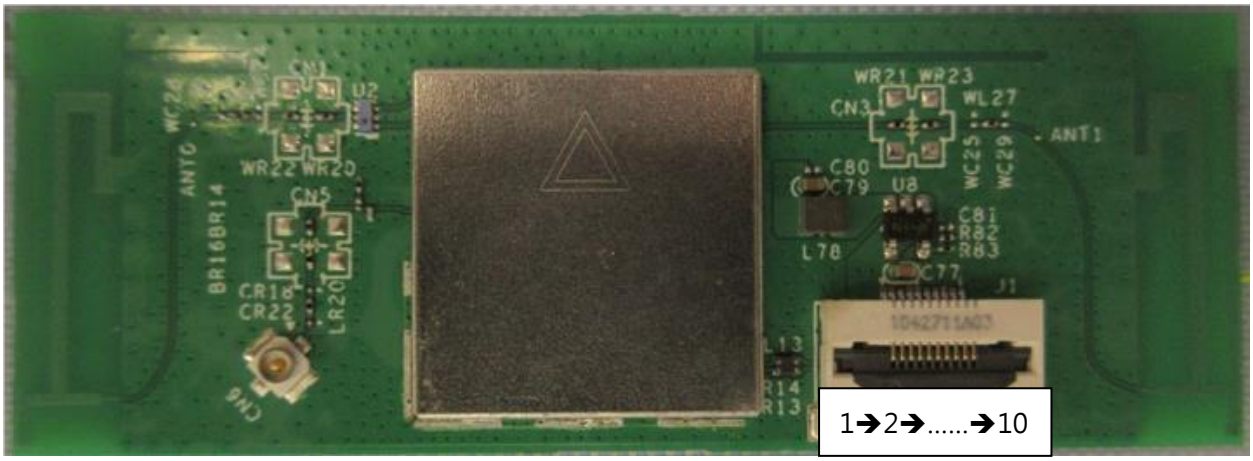

Figure 1 Pin Definitions (Module Top View)

Table 1 Pin Definitions

Pin number	Symbol name	Type	Pin description
1	VBUS	Power	DC 5V
2	VBUS	Power	DC 5V
3	WoBLE	I/O	BT_wake on
4	GND	GND	Ground
5	GND	GND	Ground
6	DM	I/O	USB data -
7	DP	I/O	USB data +
8	GND	GND	Ground
9	WoW	I/O	Wi-Fi_wake on
10	Rst_N	I/O	reset

CHAPTER2: ELECTRICAL AND RF SPECIFICAITON

2-1 Recommended Operation Rating

Table 2 Operation Rating

	Condition	Min	Typ.	Max.	Unit
VDD	5	4.5	5	5.5	V
RF Interface	Zo		50		Ohm

2-2 Power Consumption

Table 3 Power Consumption

Description	Typical	Unit
IDLE		mA
2G/2T- N mode HT 40MHz MCS 7		mA
2G/2T- N mode HT 20MHz MCS 7		mA
2G/2T- G mode OFDM54M		mA
2G/2T- B mode CCK11M		mA
5G/2T- N mode HT 40MHz MCS 7		mA
5G/2T- N mode HT 20MHz MCS 7		mA
5G/2T- A mode OFDM54M		mA
2G/2R- N mode HT 40MHz MCS 7		mA
2G/2R- N mode HT 20MHz MCS 7		mA
2G/2R- G mode OFDM54M		mA
2G/2R- B mode CCK11M		mA
5G/2R- N mode HT 40MHz MCS 7		mA
5G/2R- N mode HT 20MHz MCS 7		mA
5G/2R- A mode OFDM54M		mA

2-3 WiFi RF Specification – TX

Table 4 IEEE 802.11 b/g/n TX Average Maximum Output Power

Band@2.4GHz	Data Rate(Mbps)	Modulation	WLAN 0[dBm]	WLAN 1[dBm]	WLAN 0+1[dBm]
802.11b	1	DBPSK	13.5	13.5	16.5
	2	DQPSK			
	5.5	CCK			
	11	CCK			
802.11g	6	OFDM	15	15	18
	9	OFDM			
	12	OFDM			
	18	OFDM			
	24	OFDM			
	36	OFDM			
	48	OFDM			
	54	OFDM			
802.11n-HT20	MCS0	BPSK	14.5	14.5	17.5
	MCS1	BPSK			
	MCS2	QPSK			
	MCS3	QPSK			
	MCS4	16-QAM			
	MCS5	16-QAM			
	MCS6	64-QAM			
	MCS7	64-QAM			
802.11n-HT40	MCS0	BPSK	14	14	17
	MCS1	QPSK			
	MCS2	QPSK			
	MCS3	16-QAM			
	MCS4	16-QAM			
	MCS5	64-QAM			
	MCS6	64-QAM			
	MCS7	64-QAM			

Table 5 IEEE 802.11 a/n/ac TX Average Maximum Output Power

Band@5GHz	Data Rate(Mbps)	Modulation	WLAN 0[dBm]	WLAN 1[dBm]	WLAN 0+1[dBm]
802.11a	6	OFDM	11	11	14
	9	OFDM			
	12	OFDM			
	18	OFDM			
	24	OFDM			
	36	OFDM			
	48	OFDM			
	54	OFDM			
802.11n-HT20 802.11ac-VHT20	MCS0	BPSK	11.5	11.5	14.5
	MCS1	BPSK			
	MCS2	QPSK			
	MCS3	QPSK			
	MCS4	16-QAM			
	MCS5	16-QAM			
	MCS6	64-QAM			
	MCS7	64-QAM			
802.11n-HT40 802.11ac-VHT40	MCS0	BPSK	14	14	17
	MCS1	QPSK			
	MCS2	QPSK			
	MCS3	16-QAM			
	MCS4	16-QAM			
	MCS5	64-QAM			
	MCS6	64-QAM			
	MCS7	64-QAM			
	MCS8	256-QAM			
	MCS9	256-QAM			
802.11ac-VHT80	MCS0	BPSK	12	12	15
	MCS1	QPSK			
	MCS2	QPSK			
	MCS3	16-QAM			
	MCS4	16-QAM			
	MCS5	64-QAM			
	MCS6	64-QAM			
	MCS7	64-QAM			
	MCS8	256-QAM			
	MCS9	256-QAM			

2-4 WiFi RF Specification – RX

Table 6 IEEE 802.11 b/g/n RX Sensitivity (WLAN0&WLAN1)

Data Rate (Mbps)	Modulation	Rx Sensitivity (dBm)	Data Rate (Mbps)	Modulation	Rx Sensitivity (dBm)
		Typ.			Typ.
1	DBPSK	-98	HT20-MCS0	BPSK	-94.5
2	DQPSK	-95.5	HT20-MCS1	QPSK	-91.5
5.5	CCK	-93.5	HT20-MCS2	QPSK	-88.5
11	CCK	-90.5	HT20-MCS3	16-QAM	-86
6	OFDM	-95.5	HT20-MCS4	16-QAM	-82.5
9	OFDM	-93	HT20-MCS5	64-QAM	-78.5
12	OFDM	-92.5	HT20-MCS6	64-QAM	-76.5
18	OFDM	-90	HT20-MCS7	64-QAM	-75.5
24	OFDM	-87	HT40-MCS0	BPSK	-91.5
36	OFDM	-83	HT40-MCS1	QPSK	-88.5
48	OFDM	-78.5	HT40-MCS2	QPSK	-86
54	OFDM	-77.5	HT40-MCS3	16-QAM	-82.5
			HT40-MCS4	16-QAM	-79.5
			HT40-MCS5	64-QAM	-74.5
			HT40-MCS6	64-QAM	-74
			HT40-MCS7	64-QAM	-72.5

Table 7 IEEE 802.11 a/n/ac RX Sensitivity (WLAN0&WLAN1)

Data Rate (Mbps)	Modulation	Rx Sensitivity (dBm)	Data Rate (Mbps)	Modulation	Rx Sensitivity (dBm)
		Typ.			Typ.
6	OFDM	-94	HT40-MCS0	BPSK	-90
9	OFDM	-91	HT40-MCS1	QPSK	-86.5
12	OFDM	-91	HT40-MCS2	QPSK	-84.5
18	OFDM	-88	HT40-MCS3	16-QAM	-81.5
24	OFDM	-85	HT40-MCS4	16-QAM	-77.5
36	OFDM	-82	HT40-MCS5	64-QAM	-73.5
48	OFDM	-77.5	HT40-MCS6	64-QAM	-72.5
54	OFDM	-76	HT40-MCS7	64-QAM	-71
HT20-MCS0	BPSK	-93.5	HT40-MCS8	256-QAM	-66
HT20-MCS1	QPSK	-90	HT40-MCS9	256-QAM	-65
HT20-MCS2	QPSK	-87.5	HT80-MCS0	BPSK	-86.5
HT20-MCS3	16-QAM	-84.5	HT80-MCS1	QPSK	-83.5
HT20-MCS4	16-QAM	-81.5	HT80-MCS2	QPSK	-80.5
HT20-MCS5	64-QAM	-77	HT80-MCS3	16-QAM	-77.5
HT20-MCS6	64-QAM	-75.5	HT80-MCS4	16-QAM	-74.5
HT20-MCS7	64-QAM	-73.5	HT80-MCS5	64-QAM	-70
			HT80-MCS6	64-QAM	-68.5
			HT80-MCS7	64-QAM	-67.5
			HT80-MCS8	256-QAM	-63
			HT80-MCS9	256-QAM	-61

2-5 Bluetooth RF Specification

Parameter	Condition	Min.	Typ.	Max.	Unit
Basic Data Rate – Transmit Performance					
RF Transmit Power (TRM01)		8	9	10	dBm
Power Density (TRM02)	Per 100kHz	≤20			dBm
Power Control (TRM03)		2≤ step size ≤ 8			dB
TX Output Spectrum – Freq. Range (TRM04)	F(low)- CH0	> 2400			MHz
	F(high)-CH78	< 2483.5			
TX Output Spectrum – 20dB BW (TRM05)		$\lvert f_H - f_L \rvert$ < 1000			MHz
TX Output Spectrum – Adjacent Channel Power (TRM06)	$\lvert f - f_0 \rvert$ = 2MHz	≤ -20			dBm
	$\lvert f - f_0 \rvert$ ≥ 3MHz	≤ -40			
TX Output Spectrum – Out of Band Spurious Emission	30MHz – 1GHz	≤ -36			dBm
	1GHz -12.75GHz	≤ -30			
	5.15GHz -5.35GHz	≤ -47			
	5.725GHz-5.825GHz	≤ -47			
Modulation Characteristic (TRM07)	Delta f1 avg	140 ≤ $\Delta f1_{avg}$ ≤ 175			kHz
	Delta f2 max	≥ 115 at 99.9%			
	Delta f2 avg/Delta f1 avg	≥ 0.8			
Initial Carrier Frequency Tolerance (TRM08)		≤± 75			kHz
Carrier Frequency Drift (TRM09)	DH1	≤± 25			kHz
	DH3	≤± 40			
	DH5	≤± 40			
Maximum Drift Rate (TRM09)		20 kHz/50 us			
Enhanced Data Rate – Transmit Performance					
RF Transmit Power	π/4 DQPSK	8	9	10	dBm
	8DPSK	8	9	10	
Relative Transmit Power (TRM10)	All pairs	(P_{GFSK}-4 dB)<P_{DPSK}<(P_{GFSK}+1 dB)			
Carrier Frequency Stability (TRM11)	All packets	-75 ≤ w_i ≤ 75			kHz
	All blocks	-75 ≤ (w_0+w_i) ≤ 75			
	All blocks	-10 ≤ w_0 ≤ 10			
Modulation Accuracy – RMS DEVM (TRM11)	π/4 DQPSK	≤ 20			%
	8DPSK	≤ 13			
Modulation Accuracy – Peak DEVM (TRM11)	π/4 DQPSK	≤ 35			
	8DPSK	≤ 25			
Modulation Accuracy – 99% DEVM (TRM11)	π/4 DQPSK	≤ 30			
	8DPSK	≤ 20			
EDR Differential Phase Emissions (TRM12)		≥ 99			%

In-band Spurious Emission (TRM13)	$\lvert f-f_0 \rvert = 1MHz$	≤ -26	dB
	$\lvert f-f_0 \rvert = 2MHz$	≤ -20	dBm
	$\lvert f-f_0 \rvert \geq 3MHz$	≤ -40	
TX Output Spectrum –	30MHz – 1GHz	≤ -36	dBm
Out of Band Spurious Emission	1GHz -12.75GHz	≤ -30	
	5.15GHz -5.35GHz	≤ -47	
	5.725GHz-5.825GHz	≤ -47	
Enhanced power control (TRM14)	Step Size	2 ≤ Step Size ≤ 8	dB
	Difference. Btw. GFSK, π/4 DQPSK,&8DPSK	≤ 10	
Basic Data Rate – Receiver Performance			
Sensitivity at 0.1% BER (RCV01-02)		≤ -81	dBm
C/I Co-Channel interference (RCV03)		≤ 11	dB
C/I Adjacent CH interference (RCV03)	$\lvert f-f_0 \rvert = 1MHz$	≤ 0	
	$\lvert f-f_0 \rvert = 2MHz$	≤ -30	
	$\lvert f-f_0 \rvert \geq 3MHz$	≤ -40	
C/I Image CH interference (RCV03)	C/I_{image}	≤ -9	
	$C/I_{image\pm1MHz}$	≤ -20	
Out of band Blocking (RCV04)	30MHz – 2000 MHz	-10	dBm
	2003MHz – 2399MHz	-27	
	2484MHz – 2997MHz	-27	
	3000MHz – 12750MHz	-10	
Intermodulation Performance at ≤ 0.1% BER (RCV05)		-64	dBm
Maximum input power level		≥ -20	dBm
Spurious Emission	30MHz – 12.75GHz	≤ -57	dBm

Enhanced Data Rate – Receiver Performance			
Sensitivity at 0.1% BER (RCV07)	π/4 DQPSK	≤ -94	dBm
	8DPSK	≤ -88	
EDR BER Floor Performance at ≤ 0.0007% BER (RCV08)		-60	dBm
C/I Co-Channel interference (RCV09)	π/4 DQPSK 8DPSK	≤ +13 ≤ +21	dB
C/I Adjacent Channel C/I $\lvert f-f_0 \rvert$= 1MHz (RCV09)	π/4 DQPSK	≤ 0	
	8DPSK	≤ +5	
C/I Adjacent Channel C/I $\lvert f-f_0 \rvert$= 2MHz (RCV09)	π/4 DQPSK	≤ -30	
	8DPSK	≤ -25	
C/I Adjacent Channel C/I $\lvert f-f_0 \rvert \geq$3MHz (RCV09)	π/4 DQPSK	≤ -40	
	8DPSK	≤ -33	
C/I Image Channel C/I_{image} (RCV09)	π/4 DQPSK	≤ -7	
	8DPSK	≤ 0	
C/I Image Channel $C/I_{image \pm 1MHz}$ (RCV09)	π/4 DQPSK	≤ -20	
	8DPSK	≤ -13	
Maximum input power level (RCV10)		≥ -20	dBm
Spurious Emission	30MHz – 12.75GHz	≤ -57	Pass

2-6 Bluetooth Low Energy RF Specification

Parameter	Condition	Min.	Typ.	Max.	Unit
Transmit Performance					
RF Transmit Power (TRM-LE01,02)		7	8	9	dBm
In-Band Emission (TRM-LE03,04)	$\lvert f-f_0 \rvert = 2$MHz		≤ -20		dBm
	$\lvert f-f_0 \rvert \geq 3$MHz		≤ -30		
TX Output Spectrum – Out of Band Spurious Emission	30MHz – 1GHz		≤ -36		dBm
	1GHz -12.75GHz		≤ -30		
	5.15GHz -5.35GHz		≤ -47		
	5.725GHz-5.825GHz		≤ -47		
Modulation Characteristic (TRM-LE05)	Delta f1 avg		$225 \leq \Delta f1_{avg} \leq 275$		kHz
	Delta f2 max		≥ 185 at 99.9%		
	Delta f2 avg/Delta f1 avg		≥ 0.8		
Carrier Frequency Drift (TRM-LE06,07)	Center frequency		≤± 150		kHz
	During any packet		≤± 50		
Maximum Drift Rate (TRM-LE06,07)			20 Hz/50 us		
Receiver Performance					
Sensitivity at 30.8% PER(0.1%BER) (RCV-LE01,02)			≤ -81		dBm
C/I Co-Channel interference (RCV-LE03)	Co-channel		≤ 21		dB
C/I Adjacent CH interference (RCV-LE03)	$\lvert f-f_0 \rvert = 1$MHz		≤ 15		
	$\lvert f-f_0 \rvert = 2$MHz		≤ -17		
	$\lvert f-f_0 \rvert \geq 3$MHz		≤ -27		
C/I Image CH interference (RCV-LE03)	C/I_{image}		≤ -9		
	$C/I_{image\pm1MHz}$		≤ -15		
Out of band Blocking (RCV-LE04)	30MHz – 2000 MHz		-30		dBm
	2003MHz – 2399MHz		-35		
	2484MHz – 2997MHz		-35		
	3000MHz – 12750MHz		-30		
Intermodulation Performance at ≤30.8% (≤ 0.1% BER) (RCV-LE05)			-64		dBm
Maximum input power level (RCV-LE06)			≥ -10		dBm
PER Report Integrity 50% ≤ PER ≤ 65.4% (RCV-LE07)			-30		dBm
Spurious Emission	30MHz – 12.75GHz		≤ -57		dBm

2-7 Environment Specifications

Operating Conditions (preliminary)

Operation Temperature : 0 ~ 60˚C

Storage Conditions (preliminary)

Non-Operation Temperature : -10 ~ 60˚C (Typ. 25˚C)

CHAPTER3: MECHANICAL SPECIFICATION

3-1 Module Assembly Dimension

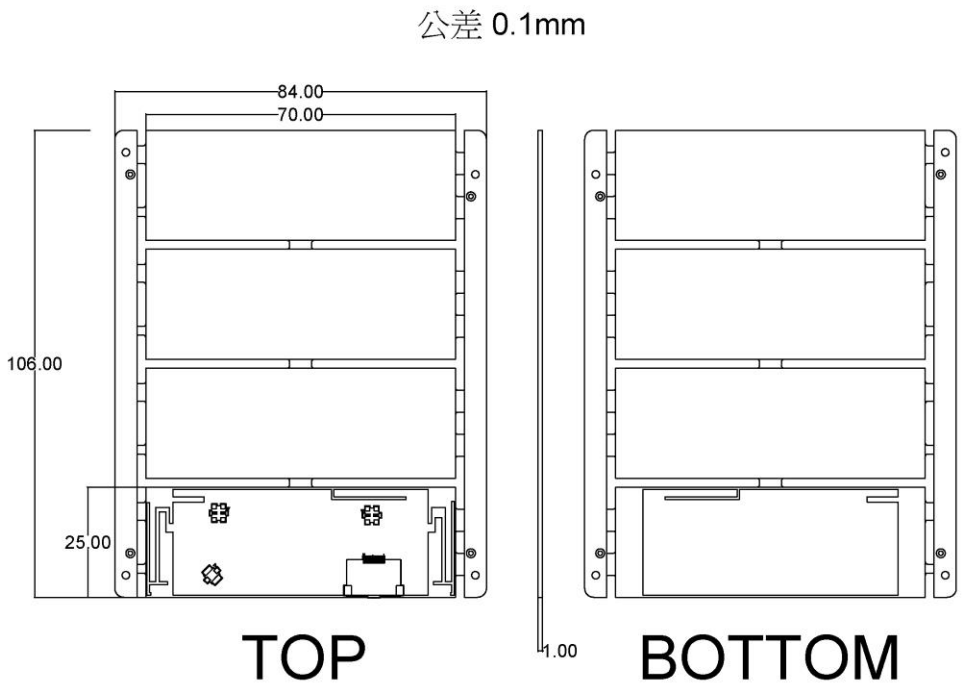

Figure 2 Mechanical Drawing

3-2 Label Specification

Figure 3 Label Drawing

3-3 Module Photo

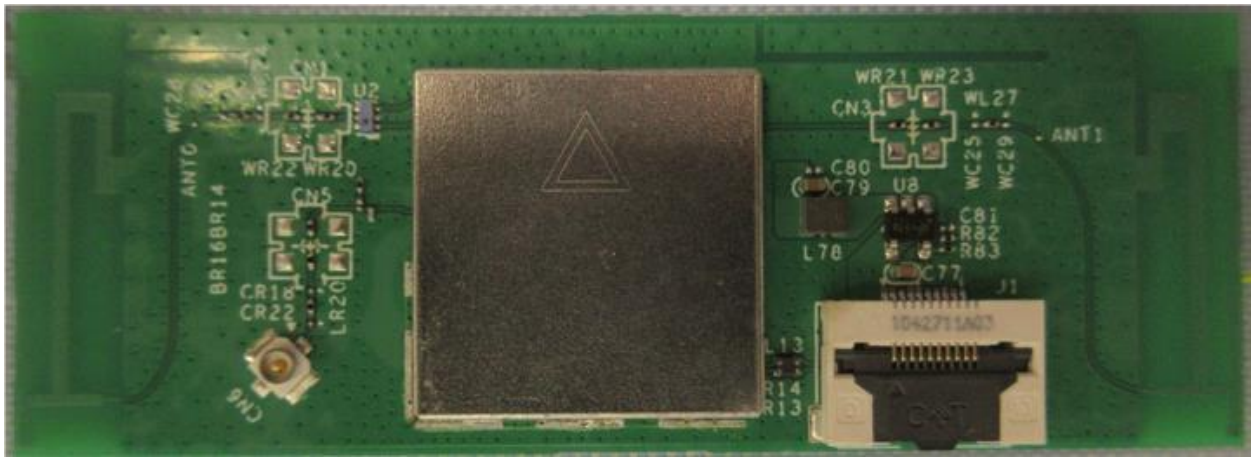

Figure 4 Module Photo(top)

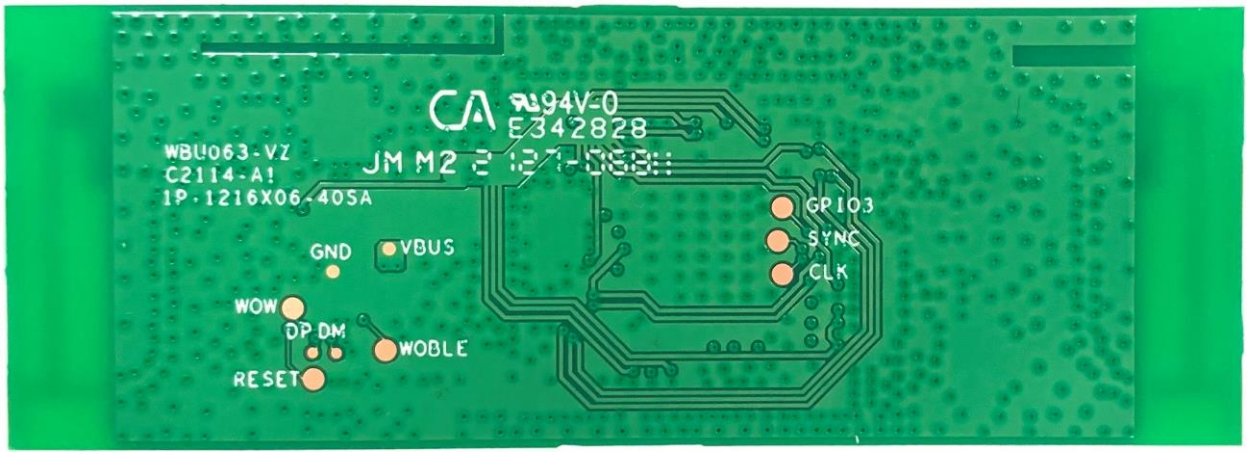

Figure 5 Module Photo(bottom)

CHAPTER4: WIRELESS MODULE INSTALLATION PROCEDURE

1, Prepare wireless module and open connector as red part

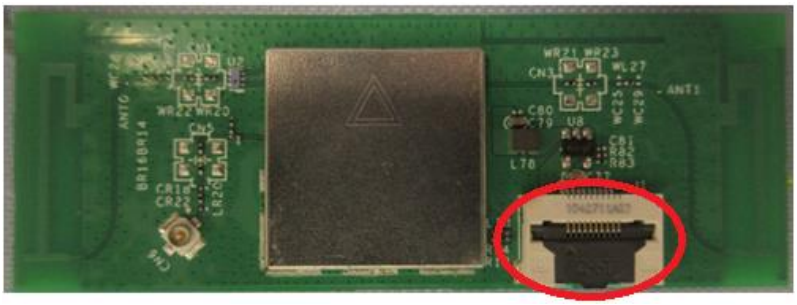

2, Prepare a FFC(Flexible Flat Cable) to connect with wireless module connector and press

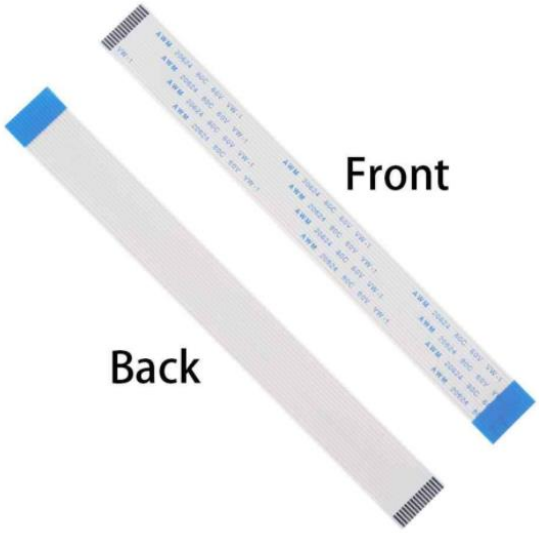

3, Another FFC site to connect with host main board and press
4, Module connection BT antenna

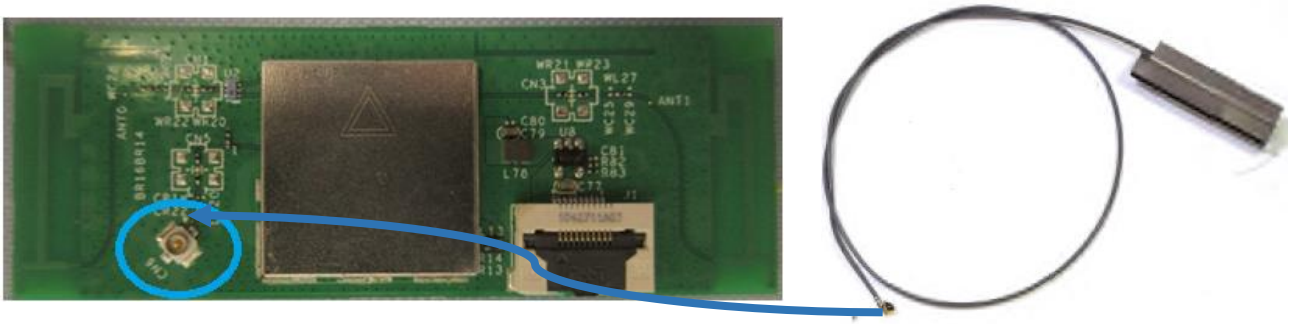

CHAPTER5: REGULATORY STATEMENT

FCC Statement:

This device complies with Part 15 of the FCC Rules. Operation is subject to the following two conditions: (1) This device may not cause harmful interference, and (2) this device must accept any interference received, including interference that may cause undesired operation.
This equipment has been tested and found to comply with the limits for a Class B digital device, pursuant to Part 15 of the FCC Rules. These limits are designed to provide reasonable protection against harmful interference in a residential installation. This equipment generates, uses and can radiate radio frequency energy and, if not installed and used in accordance with the instructions, may cause harmful interference to radio communications. However, there is no guarantee that interference will not occur in a particular installation. If this equipment does cause harmful interference to radio or television reception, which can be determined by turning the equipment off and on, the user is encouraged to try to correct the interference by one of the following measures:

- Reorient or relocate the receiving antenna.
- Increase the separation between the equipment and receiver.
- Connect the equipment into an outlet on a circuit different from that to which the receiver is connected.
- Consult the dealer or an experienced radio/TV technician for help.

FCC Caution: Any changes or modifications not expressly approved by the party responsible for compliance could void the user's authority to operate this equipment. This transmitter must not be co-located or operating in conjunction with any other antenna or transmitter.
Operations in the 5.15-5.25GHz band are restricted to indoor usage only.
This device meets all the other requirements specified in Part 15E, Section 15.407 of the FCC Rules.

Radiation Exposure Statement:

This equipment complies with FCC radiation exposure limits set forth for an uncontrolled environment. This equipment should be installed and operated with minimum distance 20cm between the radiator & your body.

This device is intended only for OEM integrators under the following conditions:

1) The antenna must be installed such that 20 cm is maintained between the antenna and users, and 2) The transmitter module may not be co-located with any other transmitter or antenna.
As long as 2 conditions above are met, further transmitter test will not be required. However, the OEM integrator is still responsible for testing their end-product for any additional compliance requirements required with this module installed

IMPORTANT NOTE:

In the event that these conditions can not be met (for example certain laptop configurations or co-location with another transmitter), then the FCC authorization is no longer considered valid and the FCC ID can not be used on the final product. In these circumstances, the OEM integrator will be responsible for reevaluating the end product (including the transmitter) and obtaining a separate FCC authorization.

The module is tested for standalone mobile RF exposure use condition. Any other usage conditions such as co-location with other transmitter(s) or being used in a portable condition will need a separate reassessment through a class II permissive change application or new certification.

End Product Labeling

This transmitter module is authorized only for use in device where the antenna may be installed such that 20 cm may be maintained between the antenna and users. The final end product must be labeled in a visible area with the following: "Contains FCC ID: RX3-WBU063VZ". The grantee's FCC ID can be used only when all FCC compliance requirements are met.

Antennas

The following antennas have been certified for use with this module; antennas of the same type with equal or lower gain may also be used with this module. The antenna must be installed such that 20 cm can be maintained between the antenna and users.

WLAN Type : PCB, Internal

BT Type : PIFA, External

				Frequencies			
Functionality	Model #	Supplier Name	Cable Length	2400~2483.5MHz	5150~5350MHz	5470~5725MHz	5725~5850MHz
WLAN 1	-	Foxconn	-	-0.57 dBi	3.61 dBi	4.5 dBi	4.5 dBi
WALN 2	-	Foxconn	-	0.48 dBi	1.85 dBi	1.49 dBi	1.49 dBi
BT	6903B0000V000	Foxconn	190mm	0.133 dBi	-	-	-
	6903B0000N000	Foxconn	230mm	4.28 dBi	-	-	-
	6903B0000P000	Foxconn	390mm	2.47 dBi	-	-	-
	6903B0000U000	Zhong Tian Xun	190mm	1.95 dBi			
	6903B0000Q000	Zhong Tian Xun	230mm	2.04 dBi			
	6903B0000R000	Zhong Tian Xun	390mm	1.42 dBi			

Part 15 Subpart B disclaimer

This transmitter module is tested as a subsystem and its certification does not cover the FCC Part 15 Subpart B rule requirement applicable to the final host. The final host will still need to be reassessed for compliance to this portion of rule requirements if applicable.

As long as all conditions above are met, further transmitter test will not be required. However, the OEM integrator is still responsible for testing their end-product for any additional compliance requirements required with this module installed.

Manual Information To the End User

The OEM integrator has to be aware not to provide information to the end user regarding how to install or remove this RF module in the user's manual of the end product which integrates this module. The end user manual shall include all required regulatory information/warning as show in this manual.

The host integrator must follow the integration instructions provided in this document and ensure that the composite-system end product complies with the requirements by a technical assessment or evaluation to the rules and to KDB Publication 996369.

The host integrator installing this module into their product must ensure that the final composite product complies with the requirements by a technical assessment or evaluation to the rules, including the transmitter operation and should refer to guidance in KDB 996369.

OEM/Host manufacturer responsibilities

OEM/Host manufacturers are ultimately responsible for the compliance of the Host and Module. The final product must be reassessed against all the essential requirements of the FCC rule such as FCC Part 15 Subpart B before it can be placed on the US market. This includes reassessing the transmitter module for compliance with the Radio and EMF essential requirements of the FCC rules. This module must not be incorporated into any other device or system without retesting for compliance as multi-radio and combined equipment

ISED Statement:

This Class B digital apparatus complies with Canadian ICES-003.

Cet appareil numérique de classe B est conforme à la norme canadienne ICES-003.

This device complies with Industry Canada licence-exempt RSS standard(s). Operation is subject to the following two conditions:
(1) this device may not cause interference, and
(2) this device must accept any interference, including interference that may cause undesired operation of the device.

Le présent appareil est conforme aux CNR d'Industrie Canada applicables auxappareils radio exempts de licence.*L'exploitation est autorisée aux deux conditions suivantes:*
(1) l'appareil ne doit pas produire de brouillage, et
(2) l'utilisateur de l'appareil doit accepter tout brouillage adioélectrique subi, même si le brouillage est susceptible d'en compromettre le fonctionnement.

RF Radiation Exposure Statement:

This equipment complies with ISED radiation exposure limits set forth for an uncontrolled environment. This equipment should be installed and operated with a minimum distance of 20 centimeters between the radiator and your body.
Operation in the band 5150-5250 MHz is only for indoor use to reduce the potential for harmful interference to co-channel mobile satellite systems.

Déclaration d'exposition aux radiations:

Cet appareil est conforme aux limites d'exposition aux rayonnements définies pour un environnement non contrôlé. Cet équipement doit être installé et utilisé à une distance minimale de 20 centimètres entre le radiateur et votre corps.
Le fonctionnement dans la bande 5150-5250 MHz est uniquement destiné à une utilisation en intérieur afin *de réduire le potentiel d'interférences nuisibles aux systèmes mobiles par satellite dans le même canal..*

This device is intended only for OEM integrators under the following conditions:

The transmitter module may not be co-located with any other transmitter or antenna.
As long as above conditions is met, further transmitter test will not be required. However, the OEM integrator is still responsible for testing their end-product for any additional compliance requirements required with this module installed.

Cet appareil est conçu uniquement pour les intégrateurs OEM dans les conditions suivantes:

Le module émetteur peut ne pas être coïmplanté avec un autre émetteur ou antenne.
Tant que les 1 conditions ci-dessus sont remplies, des essais supplémentaires sur l'émetteur ne seront pas nécessaires. Toutefois, l'intégrateur OEM est toujours responsable des essais sur son produit final pour toutes exigences de conformité supplémentaires requis pour ce module installé.

IMPORTANT NOTE:

In the event that these conditions can not be met (for example certain laptop configurations or co-location with another transmitter), then the Canada authorization is no longer considered valid and the IC ID can not be used on the final product. In these circumstances, the OEM integrator will be responsible for re-evaluating the end product (including the transmitter) and obtaining a separate Canada authorization.

NOTE IMPORTANTE:

Dans le cas où ces conditions ne peuvent être satisfaites (par exemple pour certaines configurations d'ordinateur portable ou de certaines co-localisation avec un autre émetteur), l'autorisation du Canada n'est plus considéré comme valide et l'ID IC ne peut pas être utilisé sur le produit final. Dans ces circonstances, l'intégrateur OEM sera chargé de réévaluer le produit final (y compris l'émetteur) et l'obtention d'une autorisation distincte au Canada.

Required end product labeling:

This transmitter module is authorized only for use in device where the antenna may be installed and operated with greater than 20cm between the antenna and users. The final end product must be labeled in a visible area with the following: “Contains IC: 2878F-WBU063VZ”.

Plaque signalétique du produit final

Ce module émetteur est autorisé uniquement pour une utilisation dans un appareil où l’antenne peut être installée et utilisée à plus de 20 cm entre l’antenne et les utilisateurs. Le produit final doit être étiqueté dans un endroit visible avec l'inscription suivante: "Contient des IC: 2878F-WBU063VZ ".

Manual Information To the End User

The OEM integrator has to be aware not to provide information to the end user regarding how to install or remove this RF module in the user’s manual of the end product which integrates this module.

The end user manual shall include all required regulatory information/warning as show in this manual.

Manuel d'information à l'utilisateur final

L'intégrateur OEM doit être conscient de ne pas fournir des informations à l'utilisateur final quant à la façon d'installer ou de supprimer ce module RF dans le manuel de l'utilisateur du produit final qui intègre ce module.

Le manuel de l'utilisateur final doit inclure toutes les informations réglementaires requises et avertissements comme indiqué dans ce manuel.

Antennas

The following antennas have been certified for use with this module; antennas of the same type with equal or lower gain may also be used with this module. The antenna must be installed such that 20 cm can be maintained between the antenna and users.

This radio transmitter [2878F-WBU063VZ] has been approved by Innovation, Science and Economic Development Canada to operate with the antenna types listed below, with the maximum permissible gain indicated. Antenna types not included in this list that have a gain greater than the maximum gain indicated for any type listed are strictly prohibited for use with this device.

WLAN Type : PIFA, Internal

BT Type : PIFA, External

ANTENNE

Les antennes suivantes ont été certifiées pour une utilisation avec ce module; des antennes du même type à gain égal ou inférieur peuvent également être utilisées avec ce module. L'antenne doit être installée de telle sorte que 20 cm puissent être maintenus entre l'antenne et les utilisateurs.

Cet émetteur radio [2878F-WBU063VZ] a été approuvé par Innovation, Sciences et Développement économique Canada pour fonctionner avec les types d'antenne énumérés ci-dessous, avec le gain maximal autorisé indiqué. Les types d'antenne non inclus dans cette liste qui ont un gain supérieur au gain maximum indiqué pour tout type répertorié sont strictement interdits pour l'utilisation avec cet appareil.

Type de WLAN: PIFA, interne

Type de BT: PIFA, externe

				Frequencies			
Functionality	Model #	Supplier Name	Cable Length	2400~2483.5MHz	5150~5350MHz	5470~5725MHz	5725~5850MHz
WLAN 1	-	Foxconn	-	-0.57 dBi	3.61 dBi	4.5 dBi	4.5 dBi
WALN 2	-	Foxconn	-	0.48 dBi	1.85 dBi	1.49 dBi	1.49 dBi
BT	6903B0000V000	Foxconn	190mm	0.133 dBi	-	-	-
	6903B0000N000	Foxconn	230mm	4.28 dBi	-	-	-
	6903B0000P000	Foxconn	390mm	2.47 dBi	-	-	-
	6903B0000U000	Zhong Tian Xun	190mm	1.95 dBi			
	6903B0000Q000	Zhong Tian Xun	230mm	2.04 dBi			
	6903B0000R000	Zhong Tian Xun	390mm	1.42 dBi			