Accredited testing laboratory

DAR registration number: DAT-P-176/94-D1

Federal Motor Transport Authority (KBA)
DAR registration number: KBA-P 00070-97

Appendix to test report 4-1723-01-02/05
Calibration data, Phantom certificate
and detail information of the DASY4 System

Table of Content

1 Calibration report “Probe ET3DV6” 3
2 Calibration report “1900 MHz System validation dipole 11
3 Calibration certificate of Data Aquisition Unit (DAE) 20
4 Certificate of “SAM Twin Phantom V4.0/V4.0C” 21
5 Application Note System Performance Check 23

1 Calibration report "Probe ET3DV6"

Calibration Laboratory of
Schmid & Partner
Engineering AG
Zeughausstrasse 43, 8004 Zurich, Switzerland

Client **Cetecom**

CALIBRATION CERTIFICATE

Object(s)	ET3DV6 - SN:1558
Calibration procedure(s)	QA CAL-01.v2 Calibration procedure for dosimetric E-field probes
Calibration date:	September6, 2004
Condition of the calibrated item	In Tolerance (according to the specific calibration document)

This calibration certificate documents the traceability to national standards, which realize the physical units of measurements (SI).
The measurements and the uncertainties with confidence probability are given on the following pages and are part of the certificate.

All calibrations have been conducted in the closed laboratory facility: environment temperature 22 +/- 2 degrees Celsius and humidity < 75%.

Calibration Equipment used (M&TE critical for calibration)

Model Type	ID #	Cal Date (Calibrated by, Certificate No.)	Scheduled Calibration
Power meter EPM E4419B	GB41293874	5-May-04 (METAS, No 251-00388)	May-05
Power sensor E4412A	MY41495277	5-May-04 (METAS, No 251-00388)	May-05
Reference 20 dB Attenuator	SN: 5086 (20b)	3-May-04 (METAS, No 251-00389)	May-05
Power sensor HP 8481A	MY41092180	18-Sep-02 (SPEAG, in house check Oct03)	In house check: Oct 05
RF generator HP 8684C	US3642U01700	4-Aug-99 (SPEAG, in house check Aug02)	In house check: Aug05
Network Analyzer HP 8753E	US37390585	18-Oct-01 (SPEAG, in house check Oct03)	In house check: Oct 05

	Name	Function	Signature
Calibrated by:	Nico Vetterli	Technician	N. Vetterli
Approved by:	Katja Pokovic	Laboratory Director	

Date issued:September6, 2004

This calibration certificate is issued as an intermediate solution until the accreditation process (based on ISO/IEC 17025 International Standard) for Calibration Laboratory of Schmid & Partner Engineering AG is completed.

880-KP0301061-A Page 1 of 8

Probe ET3DV6

SN:1558

Manufactured:	September 16, 2003
Last calibrated:	September 6, 2004

Calibrated for DASY Systems

(Note: non-compatible with DASY2 system!)

ET3DV6 SN:1558 **September 6, 2004**

DASY - Parameters of Probe: ET3DV6 SN:1558

Sensitivity in Free Space

NormX	**2.03**	$\mu V/(V/m)^2$	DCP X	**94**	mV
NormY	**1.92**	$\mu V/(V/m)^2$	DCP Y	**94**	mV
NormZ	**1.63**	$\mu V/(V/m)^2$	DCP Z	**94**	mV

Diode Compression[A]

Sensitivity in Tissue Simulating Liquid (Conversion Factors)

Please see Page 7.

Boundary Effect

Head **900 MHz** **Typical SAR gradient: 5 % per mm**

Sensor Center to Phantom Surface Distance		**3.7 mm**	**4.7 mm**
SAR_{be} [%]	Without Correction Algorithm	9.6	5.2
SAR_{be} [%]	With Correction Algorithm	0.1	0.2

Head **1750 MHz** **Typical SAR gradient: 10 % per mm**

Sensor Center to Phantom Surface Distance		**3.7 mm**	**4.7 mm**
SAR_{be} [%]	Without Correction Algorithm	13.8	9.0
SAR_{be} [%]	With Correction Algorithm	0.2	0.1

Sensor Offset

Probe Tip to Sensor Center	**2.7** mm
Optical Surface Detection	**in tolerance**

The reported uncertainty of measurement is stated as the standard uncertainty of measurement multiplied by the coverage factor k=2, which for a normal distribution corresponds to a coverage probability of approximately 95%.

[A] numerical linearization parameter: uncertainty not required

ET3DV6 SN:1558

September 6, 2004

Frequency Response of E-Field

(TEM-Cell:ifi110, Waveguide R22)

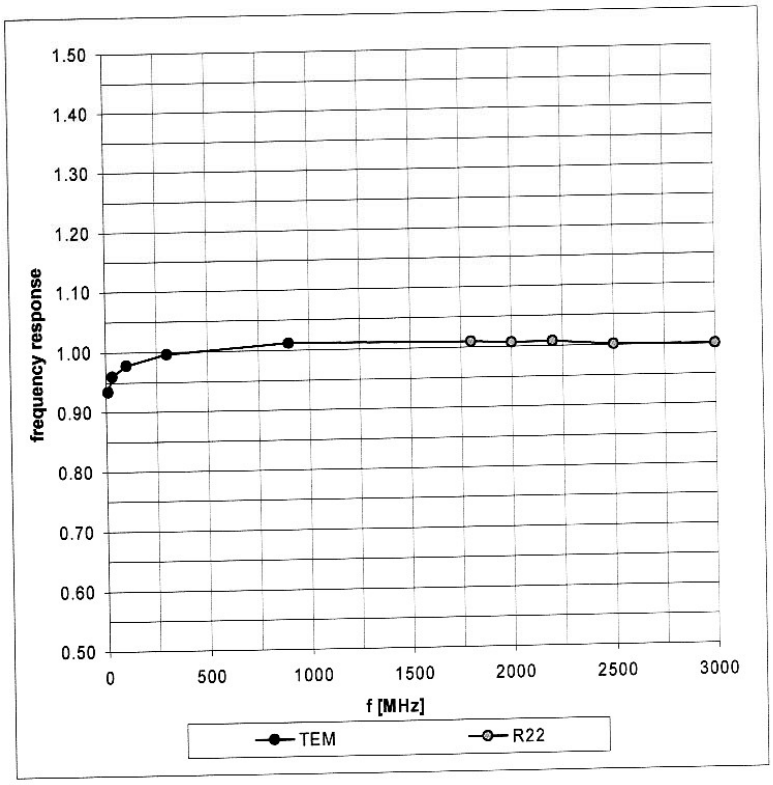

Page 4 of 8

ET3DV6 SN:1558 **September 6, 2004**

Receiving Pattern (ϕ), θ = 0°

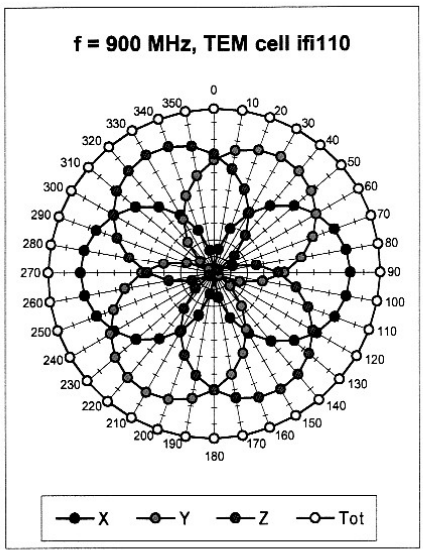

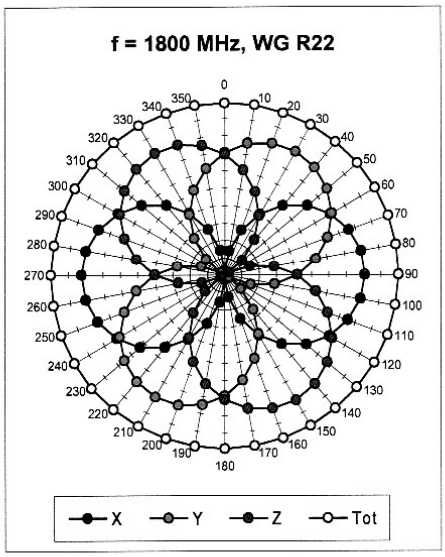

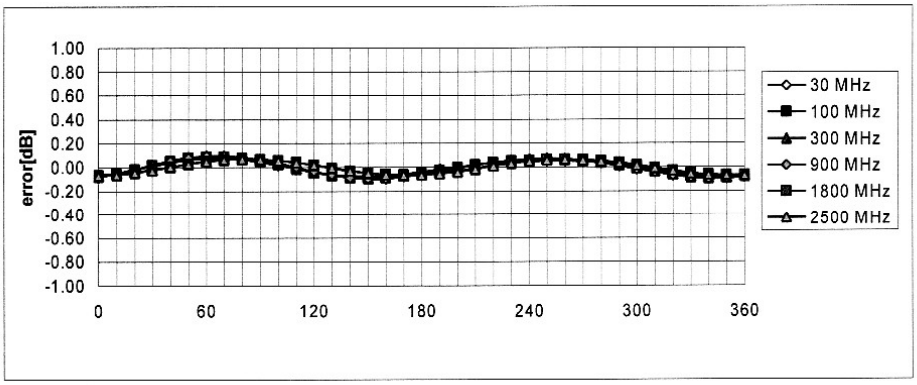

Axial Isotropy Error < ± 0.2 dB

Page 5 of 8

ET3DV6 SN:1558 **September 6, 2004**

Dynamic Range f(SAR_{head})

(Waveguide R22)

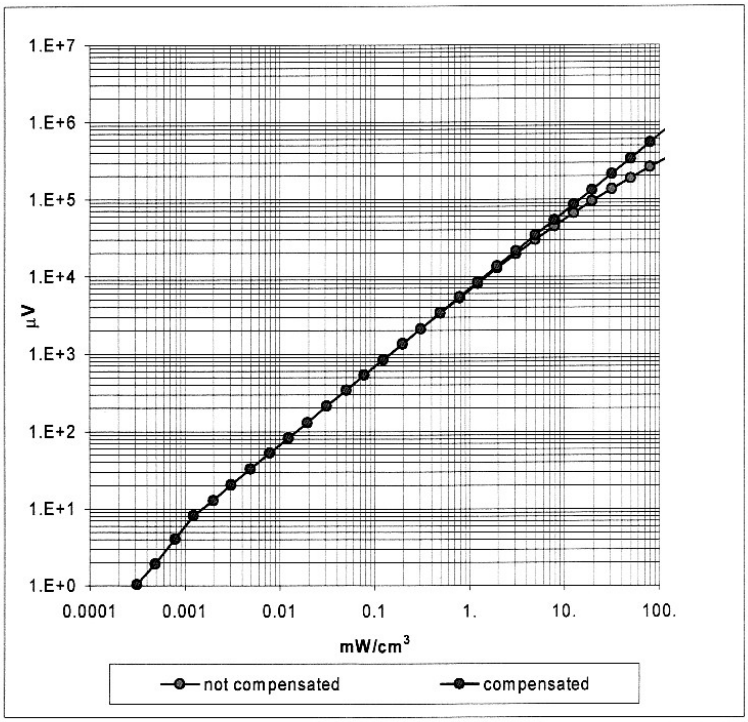

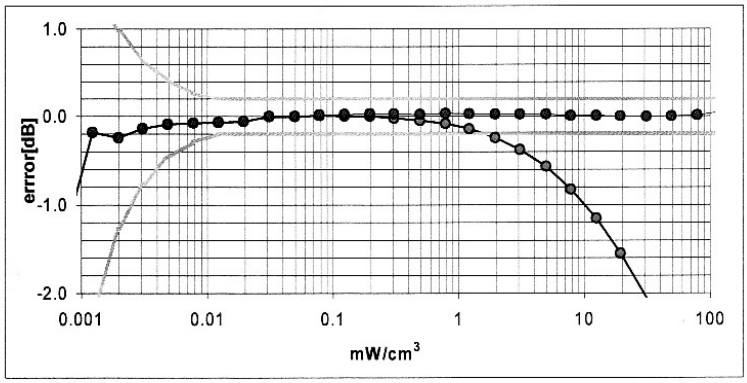

Probe Linearity Error < ± 0.2 dB

Page 6 of 8

ET3DV6 SN:1558 **September 6, 2004**

Conversion Factor Assessment

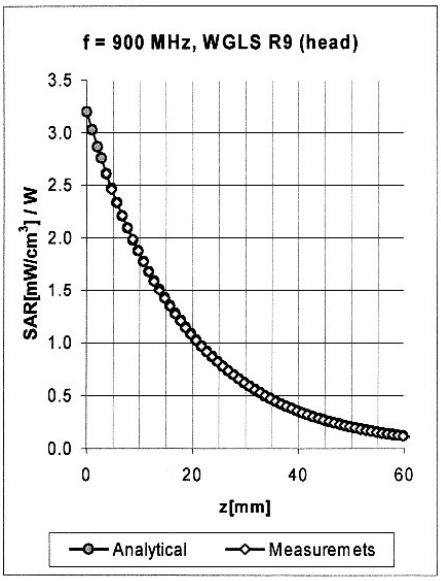

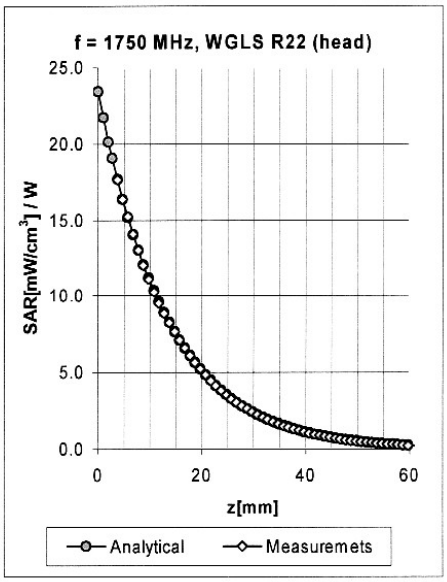

f [MHz]	Validity [MHz][B]	Tissue	Permittivity	Conductivity	Alpha	Depth	ConvF Uncertainty
835	785-885	Head	41.5 ± 5%	0.90 ± 5%	0.60	1.89	6.31 ± 9.7% (k=2)
900	850-950	Head	41.5 ± 5%	0.97 ± 5%	0.62	1.89	6.03 ± 9.7% (k=2)
1750	1700-1800	Head	40.0 ± 5%	1.40 ± 5%	0.52	2.56	4.96 ± 9.7% (k=2)
1900	1850-1950	Head	40.0 ± 5%	1.40 ± 5%	0.52	2.64	4.82 ± 9.7% (k=2)
2450	2400-2500	Head	39.2 ± 5%	1.80 ± 5%	0.95	1.92	4.27 ± 9.7% (k=2)
835	785-885	Body	55.2 ± 5%	0.97 ± 5%	0.51	2.15	6.01 ± 9.7% (k=2)
900	850-950	Body	55.0 ± 5%	1.05 ± 5%	0.47	2.24	5.78 ± 9.7% (k=2)
1750	1700-1800	Body	53.3 ± 5%	1.52 ± 5%	0.52	2.85	4.45 ± 9.7% (k=2)
1900	1850-1950	Body	53.3 ± 5%	1.52 ± 5%	0.57	2.83	4.32 ± 9.7% (k=2)
2450	2400-2500	Body	52.7 ± 5%	1.95 ± 5%	1.01	1.69	4.06 ± 9.7% (k=2)

[B] The total standard uncertainty is calculated as root-sum-square of standard uncertainty of the Conversion Factor at calibration frequency and the standard uncertainty for the indicated frequency band.

ET3DV6 SN:1558 **September 6, 2004**

Deviation from Isotropy in HSL

Error (θ, ϕ), f = 900 MHz

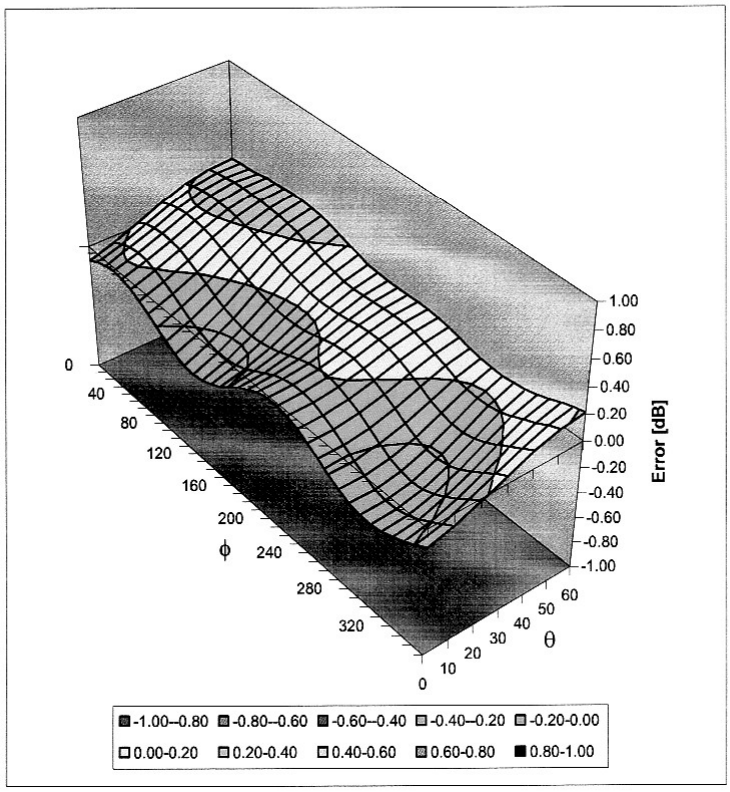

Spherical Isotropy Error < ± 0.4 dB

Page 8 of 8

2 Calibration report "1900 MHz System validation dipole

Calibration Laboratory of
Schmid & Partner
Engineering AG
Zeughausstrasse 43, 8004 Zurich, Switzerland

Client **Cetecom**

CALIBRATION CERTIFICATE

Object(s)	D1900V2 - SN:5d009
Calibration procedure(s)	QA CAL-05.v2 Calibration procedure for dipole validation kits
Calibration date:	August 31, 2004
Condition of the calibrated item	In Tolerance (according to the specific calibration document)

This calibration statement documents traceability of M&TE used in the calibration procedures and conformity of the procedures with the ISO/IEC 17025 international standard.

All calibrations have been conducted in the closed laboratory facility: environment temperature 22 +/- 2 degrees Celsius and humidity < 75%.

Calibration Equipment used (M&TE critical for calibration)

Model Type	ID #	Cal Date (Calibrated by, Certificate No.)	Scheduled Calibration
Power meter EPM E442	GB37480704	6-Nov-03 (METAS, No. 252-0254)	Nov-04
Power sensor HP 8481A	US37292783	6-Nov-03 (METAS, No. 252-0254)	Nov-04
Power sensor HP 8481A	MY41092317	18-Oct-02 (Agilent, No. 20021018)	Oct-04
RF generator R&S SML-03	100698	27-Mar-2002 (R&S, No. 20-92389)	In house check: Mar-05
Network Analyzer HP 8753E	US37390585	18-Oct-01 (SPEAG, in house check Nov-03)	In house check: Oct 05

	Name	Function	Signature
Calibrated by:	Judith Mueller	Technician	
Approved by:	Katja Pokovic	Laboratory Director	

Date issued: September 1, 2004

This calibration certificate is issued as an intermediate solution until the accreditation process (based on ISO/IEC 17025 International Standard) for Calibration Laboratory of Schmid & Partner Engineering AG is completed.

880-KP0301061-A Page 1 (1)

Schmid & Partner Engineering AG

s p e a g

Zeughausstrasse 43, 8004 Zurich, Switzerland
Phone +41 1 245 9700, Fax +41 1 245 9779
info@speag.com, http://www.speag.com

DASY

Dipole Validation Kit

Type: D1900V2

Serial: 5d009

Manufactured: February 22, 2002
Calibrated: August 31, 2004

1. Measurement Conditions

The measurements were performed in the quarter size flat phantom filled with **head simulating liquid** of the following electrical parameters at 1900 MHz:

Relative Dielectricity	**39.4**	± 5%
Conductivity	**1.44 mho/m**	± 5%

The DASY4 System with a dosimetric E-field probe ET3DV6 (SN:1507, Conversion factor 4.96 at 1900 MHz) was used for the measurements.

The dipole was mounted on the small tripod so that the dipole feedpoint was positioned below the center marking of the quarter size flat phantom and the dipole was oriented parallel to the body axis (the long side of the phantom). The standard measuring distance was 10mm from dipole center to the solution surface. The included distance spacer was used during measurements for accurate distance positioning.

The coarse grid with a grid spacing of 15mm was aligned with the dipole. The 7x7x7 fine cube was chosen for cube integration.
The dipole input power (forward power) was 250mW ± 3 %. The results are normalized to 1W input power.

2. SAR Measurement with DASY4 System

Standard SAR-measurements were performed according to the measurement conditions described in section 1. The results (see figure supplied) have been normalized to a dipole input power of 1W (forward power). The resulting averaged SAR-values measured with the dosimetric probe ET3DV6 SN:1507 and applying the advanced extrapolation are:

averaged over 1 cm^3 (1 g) of tissue:	**39.4 mW/g** ± 16.8 % (k=2)[1]
averaged over 10 cm^3 (10 g) of tissue:	**20.7 mW/g** ± 16.2 % (k=2)[1]

[1] validation uncertainty

3. Dipole Impedance and Return Loss

The impedance was measured at the SMA-connector with a network analyzer and numerically transformed to the dipole feedpoint. The transformation parameters from the SMA-connector to the dipole feedpoint are:

Electrical delay:	**1.186 ns**	(one direction)
Transmission factor:	**0.982**	(voltage transmission, one direction)

The dipole was positioned at the flat phantom sections according to section 1 and the distance spacer was in place during impedance measurements.

Feedpoint impedance at 1900 MHz:	Re{Z} = **52.5 Ω**
	Im {Z} = **1.6 Ω**
Return Loss at 1900 MHz	**-31.0 dB**

4. Measurement Conditions

The measurements were performed in the quarter size flat phantom filled with **body simulating tissue** of the following electrical parameters at 1900 MHz:

Relative Dielectricity	**52.2**	± 5%
Conductivity	**1.58 mho/m**	± 5%

The DASY4 System with a dosimetric E-field probe ET3DV6 (SN:1507, Conversion factor 4.57 at 1900 MHz) was used for the measurements.

The dipole was mounted on the small tripod so that the dipole feedpoint was positioned below the center marking of the quarter size flat phantom and the dipole was oriented parallel to the body axis (the long side of the phantom). The standard measuring distance was 10mm from dipole center to the solution surface. The included distance spacer was used during measurements for accurate distance positioning.

The coarse grid with a grid spacing of 15mm was aligned with the dipole. The 7x7x7 fine cube was chosen for cube integration.
The dipole input power (forward power) was 250mW ± 3 %. The results are normalized to 1W input power.

5. SAR Measurement with DASY4 System

Standard SAR-measurements were performed according to the measurement conditions described in section 4. The results (see figure supplied) have been normalized to a dipole input power of 1W (forward power). The resulting averaged SAR-values measured with the dosimetric probe ET3DV6 SN:1507and applying the advanced extrapolation are:

averaged over 1 cm^3 (1 g) of tissue:	**41.2 mW/g** ± 16.8 % (k=2)[2]
averaged over 10 cm^3 (10 g) of tissue:	**21.5 mW/g** ± 16.2 % (k=2)[2]

6. Dipole Impedance and Return Loss

The dipole was positioned at the flat phantom sections according to section 4 and the distance spacer was in place during impedance measurements.

Feedpoint impedance at 1900 MHz:	Re{Z} = **48.7 Ω**
	Im {Z} = **2.7 Ω**
Return Loss at 1900 MHz	**-30.3 dB**

7. Handling

Do not apply excessive force to the dipole arms, because they might bend. Bending of the dipole arms stresses the soldered connections near the feedpoint leading to a damage of the dipole.

8. Design

The dipole is made of standard semirigid coaxial cable. The center conductor of the feeding line is directly connected to the second arm of the dipole. The antenna is therefore short-circuited for DC-signals.

Small end caps have been added to the dipole arms in order to improve matching when loaded according to the position as explained in Section 1. The SAR data are not affected by this change. The overall dipole length is still according to the Standard.

9. Power Test

After long term use with 40W radiated power, only a slight warming of the dipole near the feedpoint can be measured.

[2] validation uncertainty

Page 1 of 1

Date/Time: 08/31/04 11:30:20

Test Laboratory: SPEAG, Zurich, Switzerland

DUT: Dipole 1900 MHz; Type: D1900V2; Serial: D1900V2 - SN5d009

Communication System: CW-1900; Frequency: 1900 MHz;Duty Cycle: 1:1
Medium: HSL 1900 MHz;
Medium parameters used: f = 1900 MHz; σ = 1.44 mho/m; ε_r = 39.4; ρ = 1000 kg/m^3
Phantom section: Flat Section
Measurement Standard: DASY4 (High Precision Assessment)

DASY4 Configuration:

- Probe: ET3DV6 - SN1507; ConvF(4.96, 4.96, 4.96); Calibrated: 1/23/2004
- Sensor-Surface: 4mm (Mechanical Surface Detection)
- Electronics: DAE4 Sn601; Calibrated: 7/22/2004
- Phantom: Flat Phantom quarter size; Type: QD000P50AA; Serial: SN:1001;
- Measurement SW: DASY4, V4.3 Build 17; Postprocessing SW: SEMCAD, V1.8 Build 124

Pin = 250 mW; d = 10 mm/Area Scan (81x81x1): Measurement grid: dx=15mm, dy=15mm
Maximum value of SAR (interpolated) = 11.2 mW/g

Pin = 250 mW; d = 10 mm/Zoom Scan (7x7x7)/Cube 0: Measurement grid: dx=5mm, dy=5mm, dz=5mm
Reference Value = 91.5 V/m; Power Drift = -0.006 dB
Peak SAR (extrapolated) = 17.4 W/kg
SAR(1 g) = 9.86 mW/g; SAR(10 g) = 5.17 mW/g
Maximum value of SAR (measured) = 11.1 mW/g

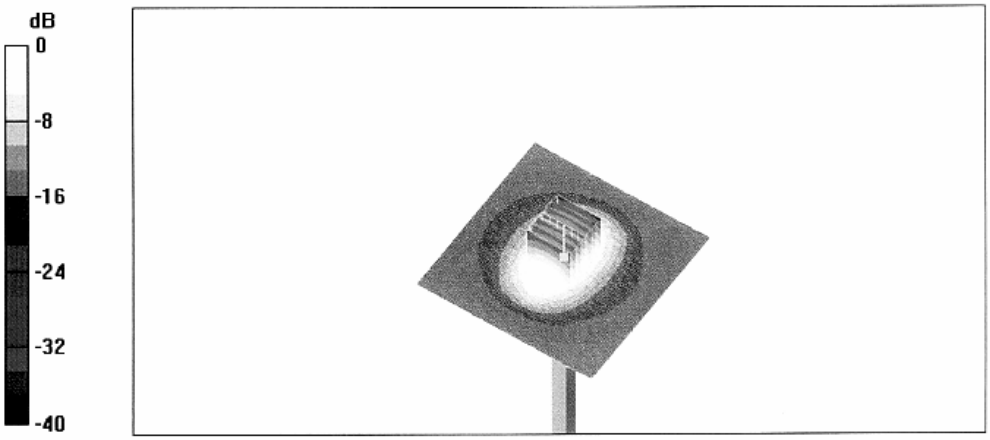

0 dB = 11.1mW/g

5d009

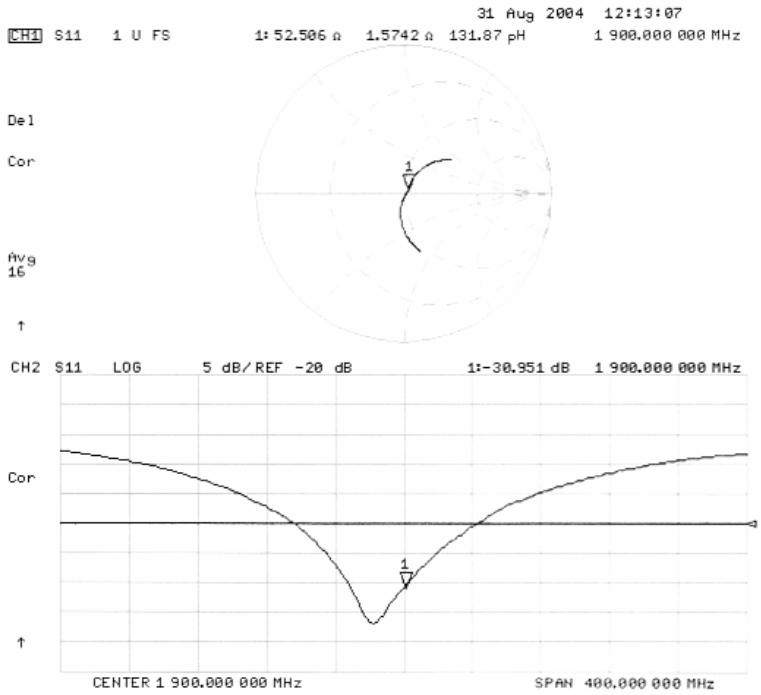
31 Aug 2004 12:13:07
CH1 S11 1 U FS 1: 52.506 Ω 1.5742 Ω 131.87 pH 1 900.000 000 MHz
Del
Cor
Avg
16
CH2 S11 LOG 5 dB/ REF -20 dB 1:-30.951 dB 1 900.000 000 MHz
Cor
CENTER 1 900.000 000 MHz
SPAN 400.000 000 MHz

Page 1 of 1

Date/Time: 08/16/04 14:01:47

Test Laboratory: SPEAG, Zurich, Switzerland

DUT: Dipole 1900 MHz; Type: D1900V2; Serial: D1900V2 - SN5d009

Communication System: CW-1900; Frequency: 1900 MHz;Duty Cycle: 1:1
Medium: Muscle 1900 MHz;
Medium parameters used: f = 1900 MHz; σ = 1.58 mho/m; ε_r = 52.2; ρ = 1000 kg/m^3
Phantom section: Flat Section
Measurement Standard: DASY4 (High Precision Assessment)

DASY4 Configuration:

- Probe: ET3DV6 - SN1507; ConvF(4.57, 4.57, 4.57); Calibrated: 1/23/2004
- Sensor-Surface: 4mm (Mechanical Surface Detection)
- Electronics: DAE4 Sn601; Calibrated: 7/22/2004
- Phantom: Flat Phantom quarter size; Type: QD000P50AA; Serial: SN:1001;
- Measurement SW: DASY4, V4.3 Build 14; Postprocessing SW: SEMCAD, V1.8 Build 123

Pin = 250 mW; d = 10 mm/Area Scan (81x81x1): Measurement grid: dx=15mm, dy=15mm
Maximum value of SAR (interpolated) = 11.8 mW/g

Pin = 250 mW; d = 10 mm/Zoom Scan (7x7x7)/Cube 0: Measurement grid: dx=5mm, dy=5mm, dz=5mm
Reference Value = 90.2 V/m; Power Drift = 0.0 dB
Peak SAR (extrapolated) = 18.1 W/kg
SAR(1 g) = 10.3 mW/g; SAR(10 g) = 5.38 mW/g
Maximum value of SAR (measured) = 11.7 mW/g

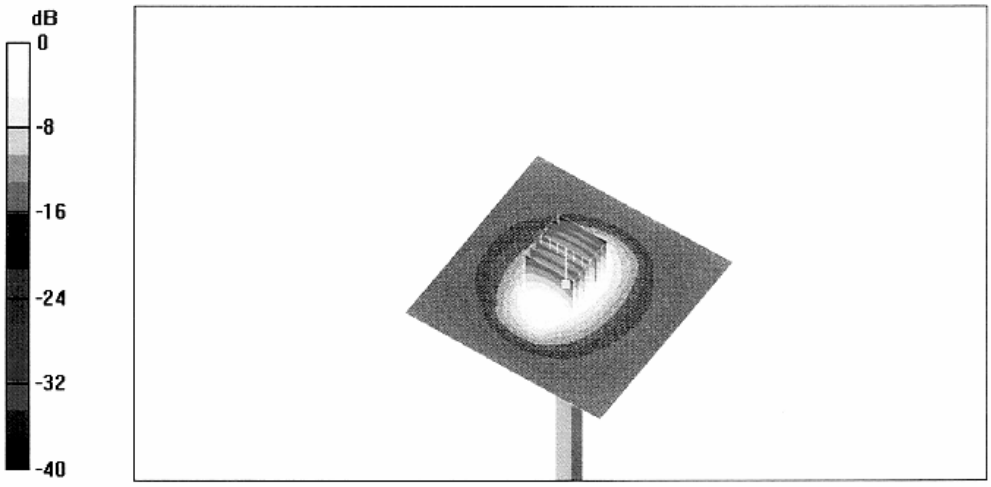

0 dB = 11.7mW/g

5d009
Body

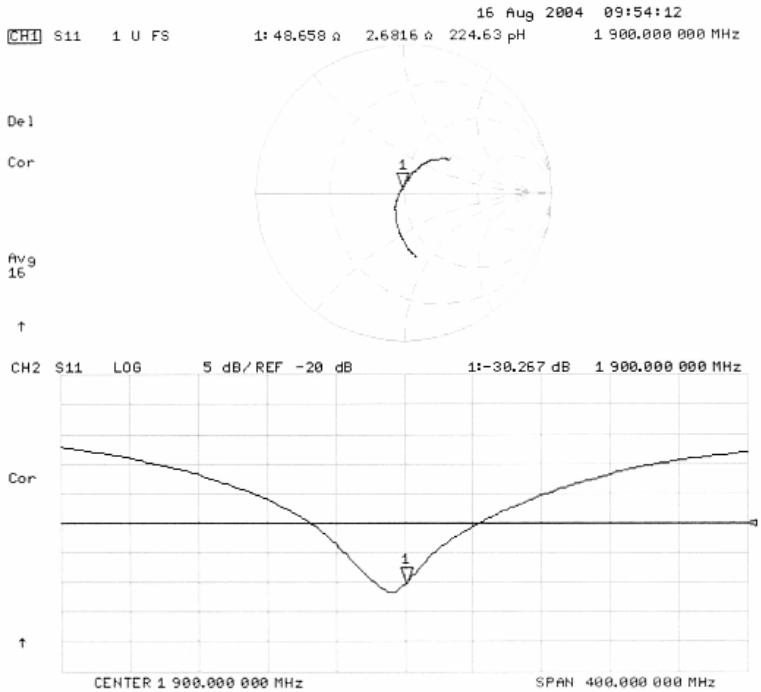
16 Aug 2004 09:54:12
CH1 S11 1 U FS 1: 48.658 Ω 2.6816 Ω 224.63 pH 1 900.000 000 MHz
Del
Cor
Avg
16
CH2 S11 LOG 5 dB/ REF -20 dB 1:-30.267 dB 1 900.000 000 MHz
Cor
CENTER 1 900.000 000 MHz
SPAN 400.000 000 MHz

3 Calibration certificate of Data Aquisition Unit (DAE)

Calibration Laboratory of
Schmid & Partner
Engineering AG
Zeughausstrasse 43, 8004 Zurich, Switzerland

S Schweizerischer Kalibrierdienst
C Service suisse d'étalonnage
Servizio svizzero di taratura
S Swiss Calibration Service

Accredited by the Swiss Federal Office of Metrology and Accreditation
The Swiss Accreditation Service is one of the signatories to the EA Multilateral Agreement for the recognition of calibration certificates

Accreditation No.: SCS 108

Client **Cetecom**

Certificate No: DAE3-413_May05

CALIBRATION CERTIFICATE

Object	DAE3 - SD 000 D03 AA - SN: 413
Calibration procedure(s)	QA CAL-06.v11 Calibration procedure for the data acquisition unit (DAE)
Calibration date:	May 30, 2005
Condition of the calibrated item	In Tolerance

This calibration certificate documents the traceability to national standards, which realize the physical units of measurements (SI).
The measurements and the uncertainties with confidence probability are given on the following pages and are part of the certificate.

All calibrations have been conducted in the closed laboratory facility: environment temperature (22 ± 3)°C and humidity < 70%.

Calibration Equipment used (M&TE critical for calibration)

Primary Standards	ID #	Cal Date (Calibrated by, Certificate No.)	Scheduled Calibration
Fluke Process Calibrator Type 702	SN: 6295803	7-Sep-04 (Sintrel, No.E-040073)	Sep-05
Secondary Standards	**ID #**	**Check Date (in house)**	**Scheduled Check**
Calibrator Box V1.1	SE UMS 006 AB 1002	16-Jul-04 (SPEAG, in house check)	In house check Jul-05

	Name	Function	Signature
Calibrated by:	Daniel Steinacher	Technician	
Approved by:	Fin Bomholt	R&D Director	

Issued: May 30, 2005

This calibration certificate shall not be reproduced except in full without written approval of the laboratory.

Certificate No: DAE3-413_May05 Page 1 of 5

4 Certificate of "SAM Twin Phantom V4.0/V4.0C"

Schmid & Partner Engineering AG

Zeughausstrasse 43, 8004 Zurich, Switzerland, Phone +41 1 245 97 00, Fax +41 1 245 97 79

EINGANG
14. Jan. 2002
CETECOM

CETECOM ICT Services GmbH
Bernd Rebmann
Untertürkheimer Str. 6-10
66117 Saarbrücken
Deutschland

Zurich, January 10, 2002

Certificate of Conformity

Dear Bernd

It has been a while since you have received your SAM Twin Phantom V4.0/V4.0C.

Several of our customers have required a document to justify to the authorities that the SAM phantom used for SAR measurements is conformant with the respective standards.

For your documentation please find enclosed a copy of the duly signed "Certificate of Conformity/First Article Inspection" (Document No. 881 - QD 000 P40 BA - B). With this certificate we confirm conformity with the CENELEC EN 50361, IEEE P1528-200x draft 6.5 and the IEC PT 62209 draft 0.9 standards.

Please do not hesitate to contact us in case you have any questions or are in need of further clarification. You can always reach us at +41-1-245 97 00 or by e-mail to info@speag.com.

Best regards,

Schmid & Partner Engineering AG

Sibyl Akrong

Schmid & Partner Engineering AG

Zeughausstrasse 43, 8004 Zurich, Switzerland, Phone +41 1 245 97 00, Fax +41 1 245 97 79

Certificate of conformity / First Article Inspection

Item	SAM Twin Phantom V4.0
Type No	QD 000 P40 BA
Series No	TP-1002 and higher
Manufacturer / Origin	Untersee Composites Hauptstr. 69 CH-8559 Fruthwilen Switzerland

Tests

The series production process used allows the limitation to test of first articles.
Complete tests were made on the pre-series Type No. QD 000 P40 AA, Serial No. TP-1001 and on the series first article Type No. QD 000 P40 BA, Serial No. TP-1006. Certain parameters have been retested using further series units (called samples).

Test	Requirement	Details	Units tested
Shape	Compliance with the geometry according to the CAD model.	IT'IS CAD File (*)	First article, Samples
Material thickness	Compliant with the requirements according to the standards	2mm +/- 0.2mm in specific areas	First article, Samples
Material parameters	Dielectric parameters for required frequencies	200 MHz – 3 GHz Relative permittivity < 5 Loss tangent < 0.05.	Material sample TP 104-5
Material resistivity	The material has been tested to be compatible with the liquids defined in the standards	Liquid type HSL 1800 and others according to the standard.	Pre-series, First article

Standards

[1] CENELEC EN 50361
[2] IEEE P1528-200x draft 6.5
[3] IEC PT 62209 draft 0.9
(*) The IT'IS CAD file is derived from [2] and is also within the tolerance requirements of the shapes of [1] and [3].

Conformity

Based on the sample tests above, we certify that this item is in compliance with the uncertainty requirements of SAR measurements specified in standard [1] and draft standards [2] and [3].

Date 18.11.2001

Signature / Stamp

Schmid & Partner Engineering AG
Zeughausstrasse 43, CH-8004 Zurich
Tel. +41 1 245 97 00, Fax +41 1 245 97 79

Doc No 881 – QD 000 P40 BA – B Page 1 (1)

5 Application Note System Performance Check

5.1.1.1 Purpose of system performance check

The system performance check verifies that the system operates within its specifica-tions. System and operator errors can be detected and corrected. It is recommended that the system performance check is performed prior to any usage of the system in order to guarantee reproducible results.
The measurement of the Specific Absorption Rate (SAR) is a complicated task and the result depends on the proper functioning of many components and the correct settings of many param-eters. Faulty results due to drift, failures or incorrect parameters might not be recognized, since they often look similar in distribution to the correct ones. The Dosimetric Assessment System DASY4 incorporates a system performance check procedure to test the proper functioning of the system. The system performance check uses normal SAR measurements in a simplified setup (the at section of the SAM Twin Phantom) with a well characterized source (a matched dipole at a specified distance). This setup was selected to give a high sensitivity to all parameters that might fail or vary over time (e.g., probe, liquid parameters, and software settings) and a low sensitivity to external effects inherent in the system (e.g., positioning uncertainty of the device holder). The system performance check does not replace the calibration of the components. The accuracy of the system performance check is not sufficient for calibration purposes. It is possible to calculate the field quite accurately in this simple setup; however, due to the open field situation some factors (e.g., laboratory re ections) cannot be accounted for. Calibrations in the at phantom are possible
with transfer calibration methods, using either temperature probes or calibrated E-field probes. The system performance check also does not test the system performance for arbitrary field sit-uations encountered during real measurements of mobile phones. These checks are performed at SPEAG by testing the components under various conditions (e.g., spherical isotropy measurements in liquid, linearity measurements, temperature variations, etc.), the results of which are used for an error estimation of the system. The system performance check will indicate situations where the system uncertainty is exceeded due to drift or failure.

5.1.1.2 System Performance check procedure

Preparation

The conductivity should be measured before the validation and the measured liquid parameters must be entered in the software. If the measured values differ from targeted values in the dipole document, the liquid composition should be adjusted. If the validation is performed with slightly different (measured) liquid parameters, the expected SAR will also be different. See the application note about SAR sensitivities for an estimate of possible SAR deviations. Note that the liquid parameters are temperature dependent with approximately – 0.5% decrease in permitivity and + 1% increase in conductivity for a temperature decrease of 1° C. The dipole must be placed beneath the flat phantom section of the Generic Twin Phantom with the correct distance holder in place. The distance holder should touch the phantom surface with a light pressure at the reference marking (little hole) and be oriented parallel to the long side of the phantom. Accurate positioning is not necessary, since the system will search for the peak SAR location, except that the dipole arms should be parallel to the surface. The device holder for mobile phones can be left in place but should be rotated away from the dipole. The forward power into the dipole at the dipole SMA connector should be determined as accurately as possible. See section 4 for a description of the recommended setup to measure the dipole input power. The actual dipole input power level can be between 20mW and several watts. The result can later be normalized to any power level. It is strongly recommended to note the actually used power level in the „comment“-window of the measurement file; otherwise you loose this crucial information for later reference.
System Performance Check

The DASY4 installation includes predefined files with recommended procedures for measurements and validation. They are read-only document files and destined as fully defined but unmeasured masks, so you must save the finished validation under a different name. The validation document requires the Generic Twin Phantom, so this phantom must be properly installed in your system. (You can create your own measurement procedures by opening a new document or editing an existing document file). Before you start the validation, you just have to tell the system with which components (probe, medium, and device) you are performing the validation; the system will take care of all parameters. After the validation, which will take about 20 minutes, the results of each task are

displayed in the document window. Selecting all measured tasks and opening the predefined "validation" graphic format displays all necessary information for validation. A description of the different measurement tasks in the predefined document is given below, together with the information that can be deduced from their results:

- The „reference" and „drift" measurements are located at the beginning and end of the batch process. They measure the field drift at one single point in the liquid over the complete procedure. The indicated drift is mainly the variation of the amplifier output power. If it is too high (above ± 0.1dB) the validation should be repeated; some amplifiers have very high drift during warm-up. A stable amplifier gives drift results in the DASY4 system below ± 0.02 dB.
- The „surface check" measurement tests the optical surface detection system of the DASY4 system by repeatedly detecting the surface with the optical and mechanical surface detector and comparing the results. The output gives the detecting heights of both systems, the difference between the two systems and the standard deviation of the detection repeatability. Air bubbles or refraction in the liquid due to separation of the sugar-water mixture gives poor repeatability (above ± 0.1mm). In that case it is better to abort the validation and stir the liquid. The difference between the optical surface detection and the actual surface depends on the probe and is specified with each probe. (It does not depend on the surface reflectivity or the probe angle to the surface within ± 30°.) However, varying breaking indices of different liquid compositions might also influence the distance. If the indicated difference varies from the actual setting, the probe parameter „optical surface distance" should be changed in the probe settings (see manual). For more information see the application note about SAR evaluation.
- The „area scan" measures the SAR above the dipole on a parallel plane to the surface. It is used to locate the approximate location of the peak SAR with 2D spline interpolation. The proposed scan uses large grid spacing for faster measurement; due to the symmetric field the peak detection is reliable. If a finer graphic is desired, the grid spacing can be reduced. Grid spacing and orientation have no influence on the SAR result.
- The zoom scan job measures the field in a volume around the peak SAR value assessed in the previous „area" scan (for more information see the application note on SAR evaluation).

If the validation measurements give reasonable results, the peak 1g and 10g spatial SAR values averaged between the two cubes and normalized to 1W dipole input power give the reference data for comparisons. The next section analyzes the expected uncertainties of these values. Section 6 describes some additional checks for further information or troubleshooting.

5.1.1.3 Uncertainty Budget

Please note that in the following Tables, the tolerance of the following uncertainty components depends on the actual equipment and setup at the user location and need to be either assessed or verified on-site by the end user of the DASY4 system:

• RF ambient conditions
• Dipole Axis to Liquid Distance
• Input power and SAR drift measurement
• Liquid permittivity - measurement uncertainty
• Liquid conductivity - measurement uncertainty

Note: All errors are given in percent of SAR, so 0.1 dB corresponds to 2.3%. The field error would be half of that.

the liquid parameter assessment give the targeted values from the dipole document. All errors are given in percent of SAR, so 0.1dB corresponds to 2.3%. The field error would be half of that.

System validation

In the table below, the system validation uncertainty with respect to the analytically assessed SAR value of a dipole source as given in the P1528 standard is given. This uncertainty is smaller than the expected uncertainty for mobile phone measurements due to the simplified setup and the symmetric field distribution.

Error Sources	Uncertainty Value	Probability Distribution	Divi-sor	c_i 1g	c_i 10g	Standard Uncertainty	Standard Uncertainty	v_i^2 or v_{eff}
Measurement System								
Probe calibration	± 4.8%	Normal	1	1	1	± 4.8%	± 4.8%	∞
Axial isotropy	± 4.7%	Rectangular	√3	0.7	0.7	± 1.9%	± 1.9%	∞
Hemispherical isotropy	± 0.0%	Rectangular	√3	0.7	0.7	± 0.0%	± 0.0%	∞
Boundary effects	± 1.0%	Rectangular	√3	1	1	± 0.6%	± 0.6%	∞
Probe linearity	± 4.7%	Rectangular	√3	1	1	± 2.7%	± 2.7%	∞
System detection limits	± 1.0%	Rectangular	√3	1	1	± 0.6%	± 0.6%	∞
Readout electronics	± 1.0%	Normal	1	1	1	± 1.0%	± 1.0%	∞
Response time	± 0.0%	Rectangular	√3	1	1	± 0.0%	± 0.0%	∞
Integration time	± 0.0%	Rectangular	√3	1	1	± 0.0%	± 0.0%	∞
RF ambient conditions	± 3.0%	Rectangular	√3	1	1	± 1.7%	± 1.7%	∞
Probe positioner	± 0.4%	Rectangular	√3	1	1	± 0.2%	± 0.2%	∞
Probe positioning	± 2.9%	Rectangular	√3	1	1	± 1.7%	± 1.7%	∞
Max. SAR evaluation	± 1.0%	Rectangular	√3	1	1	± 0.6%	± 0.6%	∞
Dipole								
Dipole axis toliquid distance	± 2.0%	Normal	1	1	1	± 1.2%	± 1.2%	∞
Input power and power drift	± 4.7%	Rectangular	√3	1	1	± 2.7%	± 2.7%	∞
Phantom and Set-up								
Phantom uncertainty	± 4.0%	Rectangular	√3	1	1	± 2.3%	± 2.3%	∞
Liquid conductivity (target)	± 5.0%	Rectangular	√3	0.64	0.43	± 1.8%	± 1.2%	∞
Liquid conductivity (meas.)	± 2.5%	Rectangular	1	0.64	0.43	± 1.6%	± 1.1%	∞
Liquid permittivity (target)	± 5.0%	Rectangular	√3	0.6	0.49	± 1.7%	± 1.4%	∞
Liquid permittivity (meas.)	± 2.5%	Rectangular	1	0.6	0.49	± 1.5%	± 1.2%	∞
Combined Uncertainty						**± 8.4%**	**± 8.1%**	∞
Expanded Std. Uncertainty						**± 16.8%**	**± 1.2%**	

Performance check repeatability

The repeatability check of the validation is insensitive to external effects and gives an indication of the variations in the DASY4 measurement system, provided that the same power reading setup is used for all validations. The repeatability estimate is given in the following table:

Error Sources	Uncertainty Value	Probability Distribution	Divi-sor	c_i 1g	c_i 10g	Standard Uncertainty	Standard Uncertainty	v_i^2 or v_{eff}
Measurement System								
Probe calibration	± 4.8%	Normal	1	1	1	0	0	∞
Axial isotropy	± 4.7%	Rectangular	√3	0.7	0.7	0	0	∞
Hemispherical isotropy	± 0.0%	Rectangular	√3	0.7	0.7	0	0	∞
Boundary effects	± 1.0%	Rectangular	√3	1	1	0	0	∞
Probe linearity	± 4.7%	Rectangular	√3	1	1	0	0	∞
System detection limits	± 1.0%	Rectangular	√3	1	1	0	0	∞
Readout electronics	± 1.0%	Normal	1	1	1	0	0	∞
Response time	± 0.0%	Rectangular	√3	1	1	0	0	∞
Integration time	± 0.0%	Rectangular	√3	1	1	0	0	∞
RF ambient conditions	± 3.0%	Rectangular	√3	1	1	0	0	∞
Probe positioner	± 0.4%	Rectangular	√3	1	1	0	0	∞
Probe positioning	± 2.9%	Rectangular	√3	1	1	0	0	∞
Max. SAR evaluation	± 1.0%	Rectangular	√3	1	1	0	0	∞
Dipole								
Dipole axis toliquid distance	± 2.0%	Normal	1	1	1	± 1.2%	± 1.2%	∞
Input power and power drift	± 4.7%	Rectangular	√3	1	1	± 2.7%	± 2.7%	∞
Phantom and Set-up								
Phantom uncertainty	± 4.0%	Rectangular	√3	1	1	± 2.3%	± 2.3%	∞
Liquid conductivity (target)	± 5.0%	Rectangular	√3	0.64	0.43	± 1.8%	± 1.2%	∞
Liquid conductivity (meas.)	± 2.5%	Rectangular	1	0.64	0.43	± 1.6%	± 1.1%	∞
Liquid permittivity (target)	± 5.0%	Rectangular	√3	0.6	0.49	± 1.7%	± 1.4%	∞
Liquid permittivity (meas.)	± 2.5%	Rectangular	1	0.6	0.49	± 1.5%	± 1.2%	∞
Combined Uncertainty						**± 5.3%**	**± 4.9%**	∞
Expanded Std. Uncertainty						**± 10.6%**	**± 9.7%**	

The expected repeatability deviation is low. Excessive drift (e.g., drift in liquid parameters), partial system failures or incorrect parameter settings (e.g., wrong probe or device settings) will lead to unexpectedly high repeatability deviations. The repeatability gives an indication that the system operates within its initial specifications. Excessive drift, system failure and operator errors are easily detected.

5.1.1.4 Power set-up for validation

The uncertainty of the dipole input power is a significant contribution to the absolute uncertainty and the expected deviation in interlaboratory comparisons. The values in Section 2 for a typical and a sophisticated setup are just average values. Refer to the manual of the power meter and the detector head for the evaluation of the uncertainty in your system. The uncertainty also depends on the source matching and the general setup. Below follows the description of a recommended setup and procedures to increase the accuracy of the power reading:

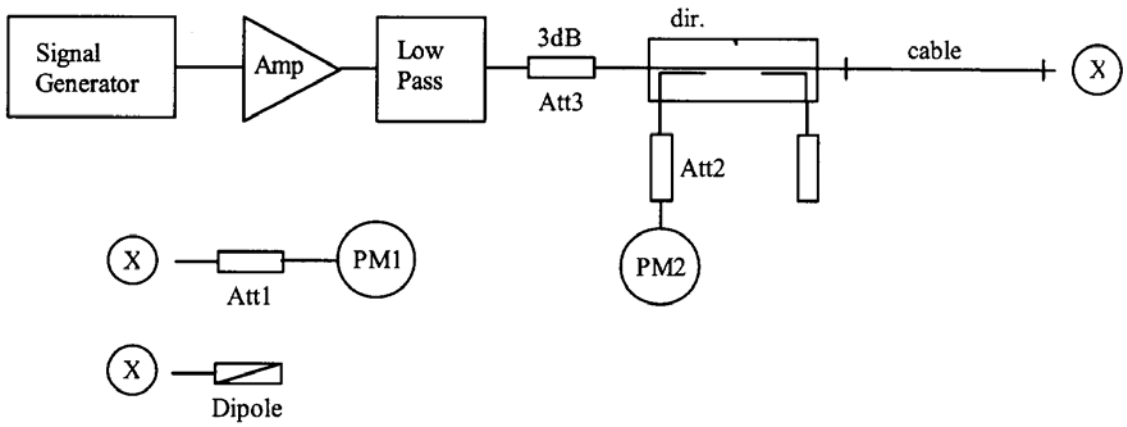

The figure shows the recommended setup. The PM1 (incl. Att1) measures the forward power at the location of the validation dipole connector. The signal generator is adjusted for the desired forward power at the dipole connector and the power meter PM2 is read at that level. After connecting the cable to the dipole, the signal generator is readjusted for the same reading at power meter PM2. If the signal generator does not allow a setting in 0.01dB steps, the remaining difference at PM2 must be noted and considered in the normalization of the validation results. The requirements for the components are:

- The signal generator and amplifier should be stable (after warm-up). The forward power to the dipole should be above 10mW to avoid the influence of measurement noise. If the signal generator can deliver 15dBm or more, an amplifier is not necessary. Some high power amplifiers should not be operated at a level far below their maximum output power level (e.g. a 100W power amplifier operated at 250mW output can be quite noisy). An attenuator between the signal generator and amplifier is recommended to protect the amplifier input.
- The low pass filter after the amplifier reduces the effect of harmonics and noise from the amplifier. For most amplifiers in normal operation the filter is not necessary.
- The attenuator after the amplifier improves the source matching and the accuracy of the power head. (See power meter manual.) It can also be used also to make the amplifier operate at its optimal output level for noise and stability. In a setup without directional coupler, this attenuator should be at least 10dB.
- The directional coupler (recommended ³ 20dB) is used to monitor the forward power and adjust the signal generator output for constant forward power. A medium quality coupler is sufficient because the loads (dipole and power head) are well matched. (If the setup is used for reflective loads, a high quality coupler with respect to directivity and output matching is necessary to avoid additional errors.)
- The power meter PM2 should have a low drift and a resolution of 0.01dBm, but otherwise its accuracy has no impact on the power setting. Calibration is not required.
- The cable between the coupler and dipole must be of high quality, without large attenuation and phase changes when it is moved. Otherwise, the power meter head PM1 should be brought to the location of the dipole for measuring.
- The power meter PM1 and attenuator Att1 must be high quality components. They should be calibrated, preferably together. The attenuator (³10dB) improves the accuracy of the power reading. (Some higher power

heads come with a built-in calibrated attenuator.) The exact attenuation of the attenuator at the frequency used must be known; many attenuators are up to 0.2dB off from the specified value.

- Use the same power level for the power setup with power meter PM1 as for the actual measurement to avoid linearity and range switching errors in the power meter PM2. If the validation is performed at various power levels, do the power setting procedure at each level.
- The dipole must be connected directly to the cable at location "X". If the power meter has a different connector system, use high quality couplers. Preferably, use the couplers at the attenuator Att1 and calibrate the attenuator with the coupler.
- Always remember: We are measuring power, so 1% is equivalent to 0.04dB.

5.1.1.5 Laboratory reflections

In near-field situations, the absorption is predominantly caused by induction effects from the magnetic near-field. The absorption from reflected fields in the laboratory is negligible. On the other hand, the magnetic field around the dipole depends on the currents and therefore on the feedpoint impedance. The feedpoint impedance of the dipole is mainly determined from the proximity of the absorbing phantom, but reflections in the laboratory can change the impedance slightly. A 1% increase in the real part of the feedpoint impedance will produce approximately a 1% decrease in the SAR for the same forward power. The possible influence of laboratory reflections should be investigated during installation. The validation setup is suitable for this check, since the validation is sensitive to laboratory reflections. The same tests can be performed with a mobile phone, but most phones are less sensitive to reflections due to the shorter distance to the phantom. The fastest way to check for reflection effects is to position the probe in the phantom above the feedpoint and start a continuous field measurement in the DASY4 multimeter window. Placing absorbers in front of possible reflectors (e.g. on the ground near the dipole or in front of a metallic robot socket) will reveal their influence immediately. A 10dB absorber (e.g. ferrite tiles or flat absorber mats) is probably sufficient, as the influence of the reflections is small anyway. If you place the absorber too near the dipole, the absorber itself will interact with the reactive near-field. Instead of measuring the SAR, it is also possible to monitor the dipole impedance with a network analyzer for reflection effects. The network analyzer must be calibrated at the SMA connector and the electrical delay (two times the forward delay in the dipole document) must be set in the NWA for comparisons with the reflection data in the dipole document. If the absorber has a significant influence on the results, the absorber should be left in place for validation or measurements. The reference data in the dipole document are produced in a low reflection environment.

5.1.1.6 Additional system checks

While the validation gives a good check of the DASY4 system components, it does not include all parameters necessary for real phone measurements (e.g. device modulation or device positioning). For system validation (repeatability) or comparisons between laboratories a reference device can be useful. This can be any mobile phone with a stable output power (preferably a device whose output power can be set through the keyboard). For comparisons, the same device should be sent around, since the SAR variations between samples can be large. Several measurement possibilities in the DASY software allow additional tests of the performance of the DASY system and components. These tests can be useful to localize component failures:

- The validation can be performed at different power levels to check the noise level or the correct compensation of the diode compression in the probe.
- If a pulsed signal with high peak power levels is fed to the dipole, the performance of the diode compression compensation can be tested. The correct crest factor parameter in the DASY software must be set (see manual). The system should give the same SAR output for the same averaged input power.
- The probe isotropy can be checked with a 1D-probe rotation scan above the feedpoint. The automatic probe alignment procedure must be passed through for accurate probe rotation movements (optional DASY4 feature with a robot-mounted light beam unit). Otherwise the probe tip might move on a small circle during rotation, producing some additional isotropy errors in gradient fields.