# Aj220B 火焰灯说明书

单页：240*140mm,折后:80*140mm, 正反印刷

## Flame Speaker

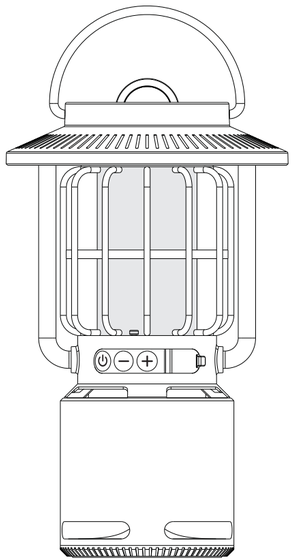

Please read carefully before use

### Product Information

- Flame lamp
- Yellow light
- White light
- Wireless speaker function
- Can rotate a variety of forms
- Support TWS any two speakers in series stereo output
- More portable for outdoor to use with built-in high-capacity rechargeable lithium battery
- IP65 dustproof and waterproof

### Technical Parameters

| | | | |
|---|---|---|---|
| Wireless Version | V5.1 | Distortion Rate | ≤10% |
| Wireless Name | Aj220 | Output Power | 10W |
| Transmission Distance | ≥10m | SNR | 79dB |
| Frequency Response | 70Hz-20kHz | Horn Parameters | Φ52mm 4Ω 10W |
| Yellow Light Power | 1W | White Light Power | 1W |
| Charging Interface | Type-C | Power Supply | 5V 0.8A |
| Built-in Lithium Battery | 3.7V/4000mAh | Product Size | 130x130x210mm |

### Lighting Use

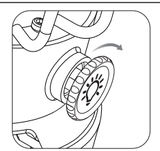

- Turn the light switch knob clockwise and enter the flame lamp mode after hearing the "clomp" sound;
- Continue to rotate the knob into the warm yellow light long bright mode, rotate to adjust the brightness of the warm yellow light;
- Then rotate to yellow-white alternating mode, yellow light and white light up at the same time.
- Then turn the knob to enter the white light long bright mode, rotate to adjust the brightness of the white light, and finally stop at the brightest white light mode.
- Turn the knob counterclockwise until you hear the "clomp" sound and turn off the light.

### Single Speaker Use

- Long press the button ⏻ to turn on speaker and with a beep.The green indicator light flashes slowly,search wireless name" Aj220" on the phone.After the connection is successful,the indicator light will be always on and accompanied with a beep.
- Long press the button — to switch to the previous song,short press to lower the volume.
- Long press the button + to next song,short press to increase the volume.When the volume reaches the maximum,there will be a beep.
- Hold down the + and — button at the same time to cancel connect with your phone.
- Short press the button ⏻ to pause or resume playing.

### TWS Doble Speaker Use

- Method 1: Long press ⏻ button at the same time to turn on the two speakers,double press the ⏻ button of any speaker to enter the pairing.There will be a beep "Ture Wireless Stereo Pair Mode" After the pairing is successful,the indicator light will be on and there will be a beep" Pair Successful" .
- Method 2:If one speaker is successfully connected to the mobile phone and to connect another one to form left and right channels, just turn on the other speaker power, and then double press the ⏻ button of the connected speaker. There will be a beep "Ture Wireless Stereo Pair Mode" to wait for the two speakers to pair automatically. After the pairing is successful, there will be a beep" Pair Successful"

⚠ Be sure to double press the ⏻ button on the speaker that is first paired to the mobile phone, otherwise, the pairing will not be successful.

- When two speakers are paired successfully. Only one search name will be displayed on the phone. After the connection is successful, the sound will come out from both speakers at the same time.
- If only want to use single speaker,press the + and — button to cancel the combination.

### Charging Instruction

Plug the Type-C cable into the USB port for charging,the red light will be on when charging,and it will go out when fully charged.

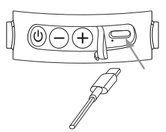

### Attention:

- Please don't charge the speaker under the temperature of 0°C-40°C.
- Not recommended for charging while using.
- Please pull out the USB cable after a full charge.
- Please don't charge the speaker in high-humidity situations.

### Rotational deformation

Pull up the small hand ring on the top cover and rotate the speaker body to operate, either the speaker or the lamp.

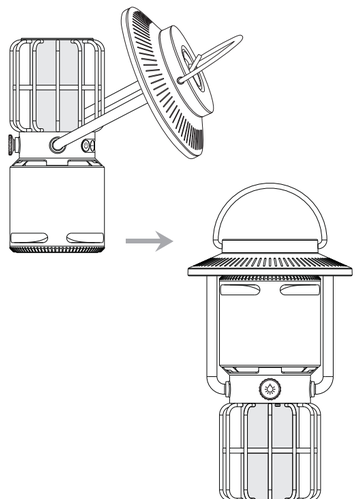

## Warranty Card

Applicable for

- Since buying date, the user enjoys one year free repair services under normal use. After one year,will be charged according to each component part cost.
- In case change component part, will be charged according to our company's component part cost list.
- The following situations without free repair services in warranty period
  1)Damage caused by natural earthquake, rat disaster, and abnormal use.
  2)Damage caused in transportation, fall, and improper storage.
  3)Consumable component, such as spare parts, batteries, light bulbs,etc.
  4)Warranty information records is not complete, no purchase date, no buying shop seal,etc.
  5)Featured using environment, such as humidity, sulfur area, high salty and on board,etc,easy corrosion area.
  6)Using not according to the instructions.
  7)Products sold by special agreement.
- When return to factory for repair, the user should make sure the product packed property to avoid any damage during transportation.
- Factory not responsible for the damages caused by the users themselves improper disassemble.

## FCC Statement

This device complies with part 15 of the FCC Rules. Operation is subject to the following two conditions:

(1) This device may not cause harmful interference, and

(2) this device must accept any interference received, including interference that may cause undesired operation.

This equipment has been tested and found to comply with the limits for a Class B digital device, pursuant to part 15 of the FCC Rules. These limits are designed to provide reasonable protection against harmful interference in a residential installation. This equipment generates, uses and can radiate radio frequency energy and, if not installed and used in accordance with the instructions, may cause harmful interference to radio communications. However, there is no guarantee that interference will not occur in a particular installation. If this equipment does cause harmful interference to radio or television reception, which can be determined by turning the equipment off and on, the user is encouraged to try to correct the interference by one or more of the following measures:

- Reorient or relocate the receiving antenna.
- Increase the separation between the equipment and receiver.
- Connect the equipment into an outlet on a circuit different from that to which the receiver is connected.
- Consult the dealer or an experienced radio/TV technician for help.

FCC Caution: Any changes or modifications not expressly approved by the party responsible for compliance could void the user's authority to operate the equipment. This transmitter must not be co-located or operating in conjunction with any other antenna or transmitter.

This device complies with FCC radiation exposure limits set forth for an uncontrolled environment.