# Wireless Home Music System

User's Guide for Model IHCTB627CW v1831-01

# Safety Instructions & Warnings

**WARNING**: To reduce the risk of electric shock, do not remove cover (or back). No user-serviceable parts inside. Refer servicing to qualified service personnel.

The exclamation point within an equilateral triangle is intended to alert the user to the presence of important operating and maintenance (servicing) instructions in the literature accompanying the appliance.

The lightning flash with arrowhead symbol, within an equilateral triangle, is intended to alert the user to the presence of un-insulated “dangerous voltage” within the product’s enclosure that may be of sufficient magnitude to constitute a risk of electric shock to persons.

This symbol indicates that this product incorporates double insulation between hazardous mains voltage and user accessible parts.

This product utilizes a Class 1 laser to read Compact Discs. This laser Compact Disc Player is equipped with safety switches to avoid exposure when the CD door is open and the safety interlocks are defeated. Invisible laser radiation is present when the CD Player’s lid is open and the system’s interlock has failed or been defeated. It is very important that you avoid direct exposure to the laser beam at all times. Please do not attempt to defeat or bypass the safety switches.



IHCTB627CW-IB -Lab.indd 2 1/18/2017 10:02:59 AM

## Important Safety Instructions

- Read these Instructions.
- Keep these Instructions.
- Heed all Warnings.
- Follow all instructions.
- Do not use this apparatus near water.
- Clean only with a dry cloth.
- Do not block any ventilation openings. Install in accordance with the manufacturer's instructions.
- Do not install near any heat sources such as radiators, heat registers, stoves, or other apparatus (including amplifiers) that produce heat.
- Do not defeat the safety purpose of the polarized or grounding - type plug. A polarized plug has two blades with one wider than the other. A grounding type plug has two blades and a third grounding prong. The wide blade or the third prong are provided for your safety. When the provided plug does not fit into your outlet, consult an electrician for replacement of the obsolete outlet.
- Protect the power cord from being walked on or pinched particularly at plugs, convenience receptacles, and the point where they exit from the apparatus.
- Only use attachments/accessories specified by the manufacturer.
- Unplug this apparatus during lightning storms or when unused for long periods of time.
- Refer all servicing to qualified service personnel. Servicing is required when the apparatus has been damaged in any way, such as power-supply cord or plug is damaged, liquid has been spilled or objects have fallen into the apparatus, the apparatus has been exposed to rain or moisture, does not operate normally, or has been dropped.
- Use only with a cart, stand, tripod, bracket, or table specified by the manufacturer, or sold with the apparatus. When a cart is used, use caution when moving the cart/ apparatus combination to avoid injury from tip-over.

## FCC Warnings

Warning: Changes or modifications to this unit not expressly approved by the party responsible for compliance could void the user's authority to operate the equipment.

**FCC Notice:**

NOTE: This equipment has been tested and found to comply with the limits for a Class B digital device, pursuant to Part 15 of the FCC Rules. These limits are designed to provide reasonable protection against harmful interference in a residential installation. This equipment generates uses and can radiate radio frequency energy and, if not installed and used in accordance with the instructions, may cause harmful interference to radio communications. However, there is no guarantee that interference will not occur in a particular installation. If this equipment does cause harmful interference to radio or television reception, which can be determined by turning the equipment off and on, the user is encouraged to try to correct the interference by one or more of the following measures:

- Reorient or relocate the receiving antenna.
- Increase the separation between the equipment and receiver.
- Connect the equipment into an outlet on a circuit different from that to which the receiver is connected.
- Consult the dealer or an experienced radio/TV technician for help.

## Battery Warnings

- WARNING: Do not ingest the battery, Chemical Burn Hazard.
- The remote control supplied with this product contains a coin/button cell battery.
- If the coin/button cell battery is swallowed, it can cause severe internal burns in just 2 hours and can lead to death.
- Keep new and used batteries away from children. Iff the battery compartment does not close securely, stop using the product and keep it away from children.
- If you think batteries might have been swallowed or placed inside and part of the body, seek immediate medical attention.
- CAUTION: Danger of explosion if battery is incorrectly replaced. Replace only with the same or equivalent type.
- WARNING: There is a danger of explosion if you attempt to charge standard Alkaline batteries in the unit. Only use rechargeable NiMH batteries.
- Battery shall not be exposed to excessive heat such as sunshine, fire or the like.
- Do not mix old and new batteries.
- Completely replace all old batteries with new ones.
- Do not mix alkaline, standard (carbon-zinc), or rechargeable (ni-cad, ni-mh, etc) batteries.
- Batteries should be recycled or disposed of as per state and local guidelines.

## Additional Warnings and Precautions

- CAUTION: TO PREVENT ELECTRIC SHOCK, MATCH WIDE BLADE OF PLUG TO WIDE SLOT, FULLY INSERT.
- Mains plug is used as disconnect device and it should remain readily operable during intended use. In order to disconnect the apparatus from the mains completely, the mains plug should be disconnected from the mains socket outlet completely.
- **CAUTION**: Use of controls or adjustments or performance of procedures other than those specified may result in hazardous radiation exposure.
- **WARNING**: Changes or modifications not expressly approved by the party responsible for compliance could void the user's authority to operate the equipment.

This device complies with Part 15 of the FCC Rules. Operation is subject to the following two conditions: (1) This device may not cause harmful interference. (2) This device must accept any interference received, including interference that may cause undesired operation.

- WARNING: Use of this unit near fluorescent lighting may cause interference regarding use of the remote. If the unit is displaying erratic behavior move away from any fluorescent lighting, as it may be the cause.
- WARNING: Shock hazard - Do Not Open.
- Caution and marking information is located at the rear or bottom of the apparatus.
- WARNING: To reduce the risk of fire or electric shock, do not expose this apparatus to rain, moisture, dripping, or splashing.
- Objects filled with liquids, such as vases, shall not be placed on the apparatus.
- WARNING: This product may contain chemicals known to the State of California to cause birth defects, or other reproductive harm (California Prop 65). Wash hands after handling.
- This product meets and complies with all Federal regulations.



IHCTB627CW-IB -Lab.indd 3 1/18/2017 10:02:59 AM

# Table of Contents

**Setup** . . . . . 5
Includes
Power
Speakers

**Orientation** . . . . . 6
Features & Controls

**Remote Control** . . . . . 8
Functions
Batteries

**Connecting External Devices** . . . . . 9
Pairing Bluetooth and Playing Audio Wirelessly
Using the Aux In (3.5mm Audio Input)
RCA Audio Output

**Operation** . . . . . 10
Playing a Record
Loading and Playing a CD
Programming a CD
Playing the AM/FM Radio
Programming Radio Station Presets
Playing a Cassette Tape

**Customer Support** . . . . . 12
Contact Information
Warranty
International Support



IHCTB627CW-IB -Lab.indd 4 1/18/2017 10:02:59 AM

# Setup

## Includes

- Remote control with CR2025 battery
- 45 rpm adapter
- User's Guide

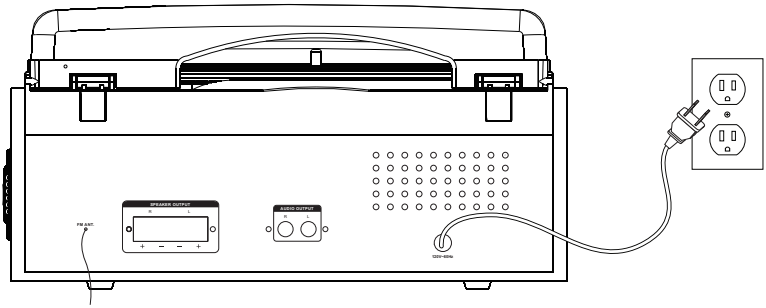


## Power

Plug the built in AC power cord into a standard wall outlet.

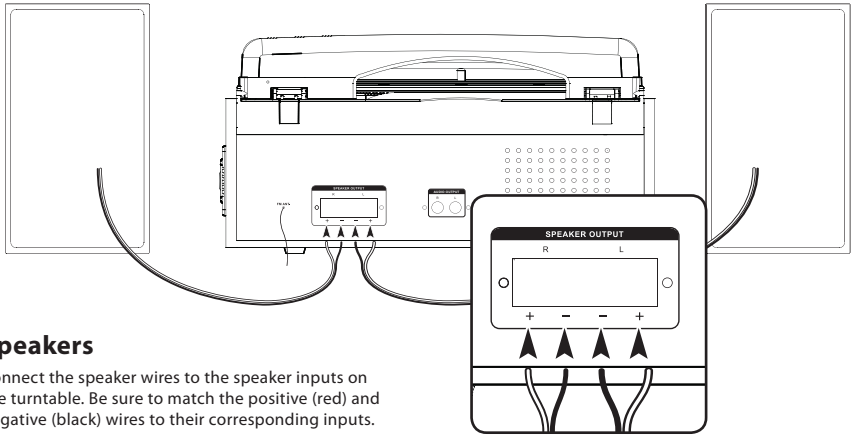


## Speakers

Connect the speaker wires to the speaker inputs on the turntable. Be sure to match the positive (red) and negative (black) wires to their corresponding inputs.



IHCTB627CW-IB -Lab.indd 5 1/18/2017 10:03:01 AM

# Orientation

## Features & Controls

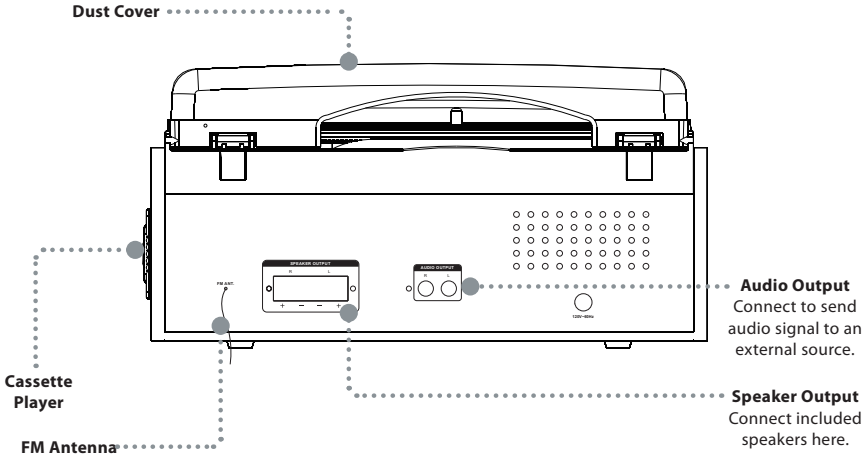


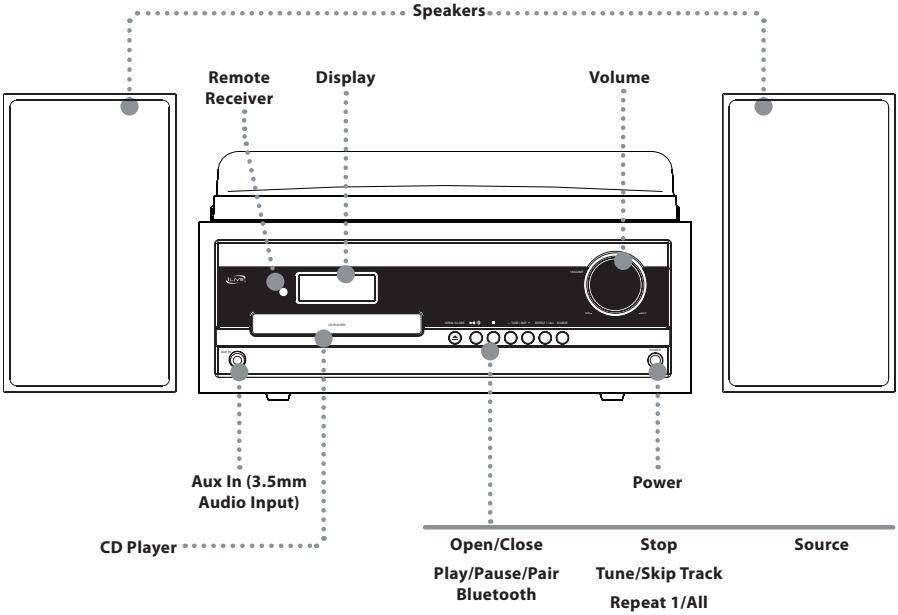




IHCTB627CW-IB -Lab.indd 6 1/18/2017 10:03:02 AM

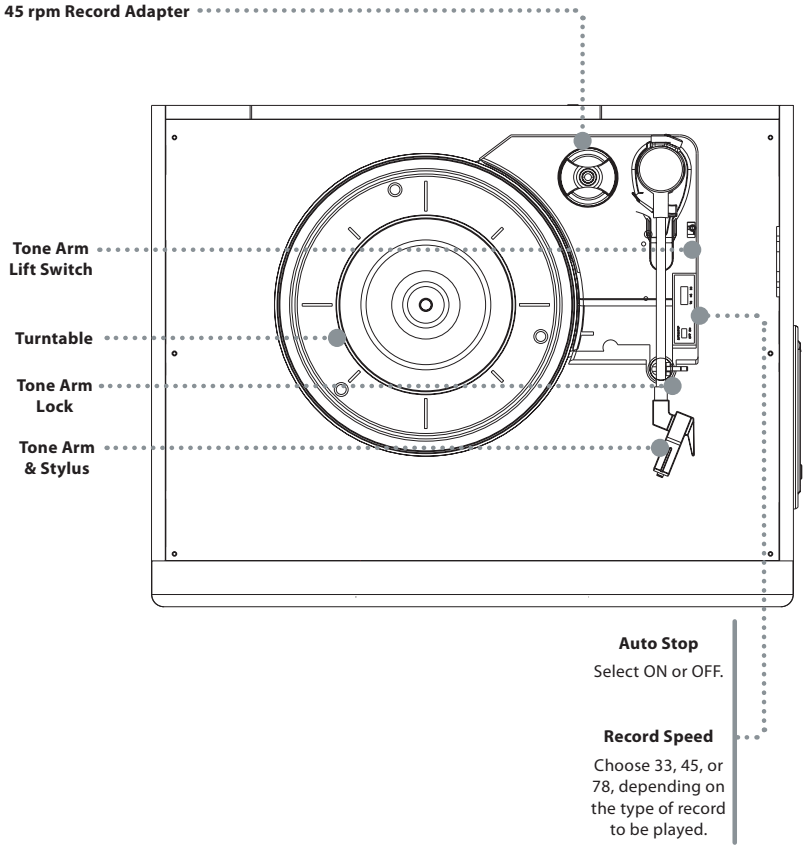




IHCTB627CW-IB -Lab.indd 7 1/18/2017 10:03:03 AM

# Remote Control

## Functions

**Power**
Press to power the system ON or OFF.

**Source**
Press to set the media source.

**Repeat 1/All**
Press to repeat 1 audio track or all audio tracks on a loaded CD.

**Stop**
Press to stop and audio track.

**Skip/Tune**
Press to skip and audio track.
In FM radio mode, press to adjust the tuning.

**Prog**
Press to program tracks to play in a specific order.

**Open**
Press to open the CD player.

**Stop**
Press to stop audio track.

**Play/Pause/Pair**
Press to play or pause an audio track.
In Bluetooth mode, press and hold to pair.

**Volume**
Press to adjust volume.

**Mute**
Press to mute volume.

## Batteries

Requires 1 CR2025 battery (included).

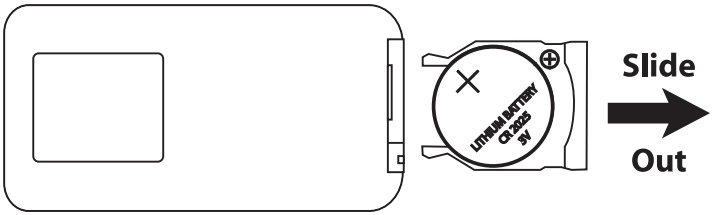




IHCTB627CW-IB -Lab.indd 8 1/18/2017 10:03:03 AM

# Connecting External Devices

## Pairing Bluetooth and Playing Audio Wirelessly

1. Set the **Source** to **BT** and press and hold the **Play/Pause/Pair** button. The pairing indicator will begin quickly flashing blue. *When pairing, remain within 3 feet of the unit.*

2. Using the controls on your Bluetooth device, search for and select **IHCTB627** in your Bluetooth settings to pair. If your device requests a password, enter the default password **0 0 0 0** . *If need be, refer to the user's manual for your specific device for instructions on pairing and connecting Bluetooth devices.*

3. When successfully paired and connected, an audible chime will sound and the pairing indicator will turn solid. After initial pairing, the unit will stay paired unless unpaired manually by the user or erased due to a reset of the device. If your device should become unpaired or you find it is unable to connect, repeat these steps.

4. Use the controls on your connected Bluetooth Device to select and begin playing audio. Play, pause or skip a selected track using the controls on the connected Bluetooth Device or the controls on the turntable.

## Using the Aux In (3.5mm Audio Input)

Requires 3.5 mm audio input cable (not included).

1. Plug a 3.5 mm audio input cable into the **Aux In** on the unit and the headphone jack on an MP3 Player or other audio source.

2. Set the **Source** to **Aux** and use the controls on your connected music player to select and play audio.

3. Audio played through the connected device should now be heard through the speakers.

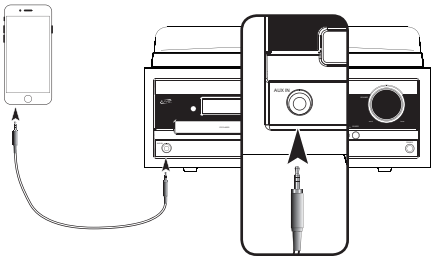


## RCA Audio Output

Requires RCA audio cables (red/white, not included). Use to connect the turntable to an external stereo system.

1. Connect RCA audio cables to the **Audio Output** on the back of the turntable, and to the **audio input** of an external stereo system.

2. If need be, adjust the external stereo system to accept input from the turntable.

3. Audio played through the turntable should now be heard through the connected stereo system.

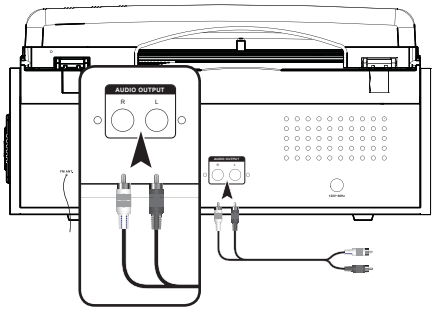


Note : The Audio Output sends a fixed audio volume level to any connected audio device. To adjust the volume, you must change it from the connected device.



IHCTB627CW-IB -Lab.indd 9 1/18/2017 10:03:06 AM

# Operation

## Playing a Record

It is recommended that you use extreme care when manipulating the tone arm, stylus, and other components of this turntable. These parts are very sensitive and can easily break or become damaged if they are carelessly handled.

1. Set the **Source** to **Phono**.
2. Lift open the turntable cover and place the record on the turntable. **If you are playing a 45 rpm record,** use the included 45 rpm adapter and place it between the turntable and the record.
3. Remove the shroud that protects the stylus and release the lock that holds the Tone Arm in place.

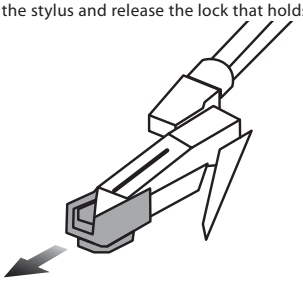

4. Use the **Tone Arm Lift Switch** to raise the **Tone Arm** from its catch.

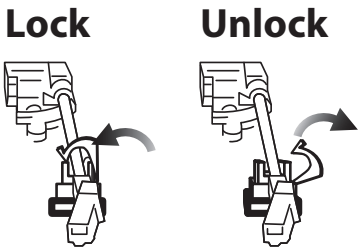


5. Using your hand, *gently* swing the **Tone Arm** into the desired location over the record. The turntable will start spinning as the Tone Arm is moved into position.
6. Use the **Tone Arm Lift Switch** to safely lower the stylus onto the record.
   *Using the Lift Switch instead of your hand will reduce the chance of accidentally damaging the record or the stylus.*
7. Slide the **Auto Stop Switch** to **ON** to enable the Auto Stop feature. When the record is finished playing, it will automatically stop the turntable. Use the **Lift Switch** to raise the stylus off of the record, and *gently* return the Tone Arm to the catch by hand.
   *Note: Some records place their Auto Stop area outside of the range of this unit. In these cases, the record will stop playing before the last track is reached. Set the Auto Stop Switch to OFF and use the Tone Arm Lift Switch to safely raise the stylus off the record when the end of the record has been reached.*
8. When not in use, secure and lock the Tone Arm in its resting position and replace the protective shroud over the stylus. This will minimize the risk of accidental damage to these sensitive parts.



IHCTB627CW-IB -Lab.indd 10 1/18/2017 10:03:06 AM

## Loading and Playing a CD

1. Press the **Open/Close button** to open the CD tray.
2. Place a CD in the tray, label side facing up, and close the CD tray.
3. Set the **Source** to **CD mode.**
4. Use the controls on the unit to begin play, pause, stop and skip audio on the loaded disc.

## Programming a CD

1. Press the **Stop** button to stop a loaded CD.
2. Press the **Prog** button on the remote. *"01" will blink on the display.*
3. Press the **Skip Fwd/Rev** buttons to select a track.
4. Press the **Prog** button to add the selected track to the program. Repeat this process to program up to 20 tracks to play in a specified order.
5. Press the **Stop** button to cancel a program.

## Playing the AM/FM Radio

Adjust the position of the antenna to improve AM/FM radio reception.

1. Set the **Source** to **Tune mode.**
2. Use the **Tuning buttons** to tune to a desired frequency band.

## Programming Radio Station Presets

1. With the radio on, tune to a desired frequency and press & hold the **Prog** button on the remote or the unit.
2. Press the **Tune+/-** buttons on the remote to select a preset number. Up to 20 stations may be preset.
3. Once you have selected the preset number you wish to program, press the **Prog** button again to save the current station to that preset.

## Playing a Cassette Tape

1. Set the **Source** to **Tape.**
2. Insert a cassette tape in the **Cassette Door** on the side of the unit.
3. Use the **control button** on the side of the unit to play, fast forward and eject the cassette.

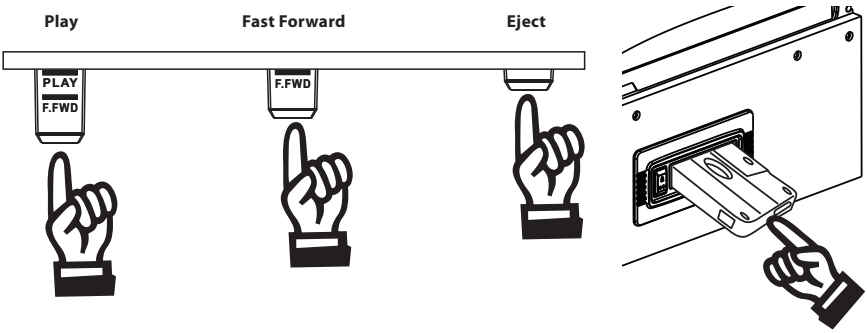




IHCTB627CW-IB -Lab.indd 11 1/18/2017 10:03:07 AM

# Customer Support

## Contact Information

**Website:** www.iliveelectronics.com

**Email Support:** prodinfo@dpiinc.com

**Email Parts:** partsinfo@dpiinc.com

**Phone Support:** 1-888-999-4215

## International Support

To download this User's Guide in English, Spanish, and French, or to get answers to frequently asked questions, visit the support section at: **www.iliveelectronics.com**

Para descargar este Manual del Usuario en inglés, español y francés, o para obtener respuestas a preguntas frecuentes, visite la sección de apoyo en: **www.iliveelectronics.com**

Pour télécharger ce guide de l'utilisateur en anglais, espagnol ou français, ou pour obtenir des réponses à des questions fréquemment posées, consultez la rubrique d'assistance sur: **www.iliveelectronics.com**

Made Green

***Protect for Today***
***Sustain for Tomorrow***

Copyright © 2017 Digital Products International (DPI, Inc.). All other trademarks appearing herein are the property of their respective owners. Specifications are subject to change without notice.



IHCTB627CW-IB -Lab.indd 12 1/18/2017 10:03:07 AM