Turntable with Bluetooth Wireless

User's Guide for Model ITTB476BU v1565-01

For the User's Guide, go to **www.iLiveElectronics.com**

Warnings & Precautions

Important Safety Instructions

- Read these Instructions.
- Keep these Instructions.
- Heed all Warnings.
- Follow all instructions.
- Do not use this apparatus near water.
- Clean only with a dry cloth.
- Do not block any ventilation openings. Install in accordance with the manufacturer's instructions.
- Do not install near any heat sources such as radiators, heat registers, stoves, or other apparatus (including amplifiers) that produce heat.
- Do not defeat the safety purpose of the polarized or grounding - type plug. A polarized plug has two blades with one wider than the other. A grounding type plug has two blades and a third grounding prong. The wide blade or the third prong are provided for your safety. When the provided plug does not fit into your outlet, consult an electrician for replacement of the obsolete outlet.
- Protect the power cord from being walked on or pinched particularly at plugs, convenience receptacles, and the point where they exit from the apparatus.
- Only use attachments/accessories specified by the manufacturer.
- Unplug this apparatus during lightning storms or when unused for long periods of time.
- Refer all servicing to qualified service personnel. Servicing is required when the apparatus has been damaged in any way, such as power-supply cord or plug is damaged, liquid has been spilled or objects have fallen into the apparatus, the apparatus has been exposed to rain or moisture, does not operate normally, or has been dropped.
- Use only with a cart, stand, tripod, bracket, or table specified by the manufacturer, or sold with the apparatus. When a cart is used, use caution when moving the cart/apparatus combination to avoid injury from tip-over.

FCC Warnings

Warning: Changes or modifications to this unit not expressly approved by the party responsible for compliance could void the user's authority to operate the equipment.
NOTE: This equipment has been tested and found to comply with the limits for a Class B digital device, pursuant to Part 15 of the FCC Rules. These limits are designed to provide reasonable protection against harmful interference in a residential installation. This equipment generates, uses, and can radiate radio frequency energy and, if not installed and used in accordance with the instructions, may cause harmful interference to radio communications. However, there is no guarantee that interference will not occur in a particular installation. If this equipment does cause harmful interference to radio or television reception, which can be determined by turning the equipment off and on, the user is encouraged to try to correct the interference by one or more of the following measures:

- Reorient or relocate the receiving antenna.
- Increase the separation between the equipment and receiver.
- Connect the equipment into an outlet on a circuit different from that to which the receiver is connected.
- Consult the dealer or an experienced radio/TV technician for help.

Additional Warnings and Precautions

- **CAUTION**: TO PREVENT ELECTRIC SHOCK, MATCH WIDE BLADE OF PLUG TO WIDE SLOT, FULLY INSERT.
- Caution and marking information is located at the rear or bottom of the apparatus.
- Objects filled with liquids, such as vases, shall not be placed on the apparatus.
- Mains plug is used as disconnect device and it should remain readily operable during intended use. In order to disconnect the apparatus from the mains completely, the mains plug should be disconnected form the mains socket outlet completely.
- **WARNING:** To reduce the risk of fire or electric shock, do not expose this apparatus to rain, moisture, dripping, or splashing. **CAUTION:** Use of controls or adjustments or performance of procedures other than those specified may result in hazardous radiation exposure.
- **WARNING:** Changes or modifications to this unit not expressly approved by the party responsible for compliance could void the user's authority to operate the equipment.
- **WARNING:** Do not place this unit directly onto furniture surfaces with any type of soft, porous, or sensitive finish. As with any rubber compound made with oils, the feet could cause marks or staining where the feet reside. We recommend using a protective barrier such as a cloth or a piece of glass between the unit and the surface to reduce the risk of damage and/or staining.
- **WARNING:** This product may contain chemicals known to the State of California to cause birth defects, or other reproductive harm (California Prop 65). Wash hands after handling.
- This product meets and complies with all Federal Regulations.

Table of Contents

Introduction & Setup **5**
- Features
- Includes
- Power

Orientation **6**
- Main Features
- Rear Inputs

Operation **8**
- Playing a Record

Bluetooth **9**
- Pairing a Bluetooth Device
- Playing Audio Wirelessly

Connecting to External Systems **10**
- RCA Audio Output

Connecting Devices to the Turntable **11**
- Using the Aux In (3.5mm Audio Input)
- Using the Headphone Jack

Company Information **12**
- Contact Information
- Warranty
- International Support

Introduction & Setup

Features

- 8 inch, 3 speed turntable plays 33 1/3, 78, and 45 rpm records
- Supports Bluetooth
- Wireless range: 60 feet
- Aux In 3.5mm audio input
- Built-in stereo speakers
- RCA stereo audio outputs
- Analog volume control
- DC power input:
  requires an AC/DC power adapter (included)

Includes

- 45 rpm adapter
- Stylus
- AC/DC power adapter
- Warranty
- User's guide

Power

Plug the power cord into the DC Input on the back of the unit and a standard wall power outlet.

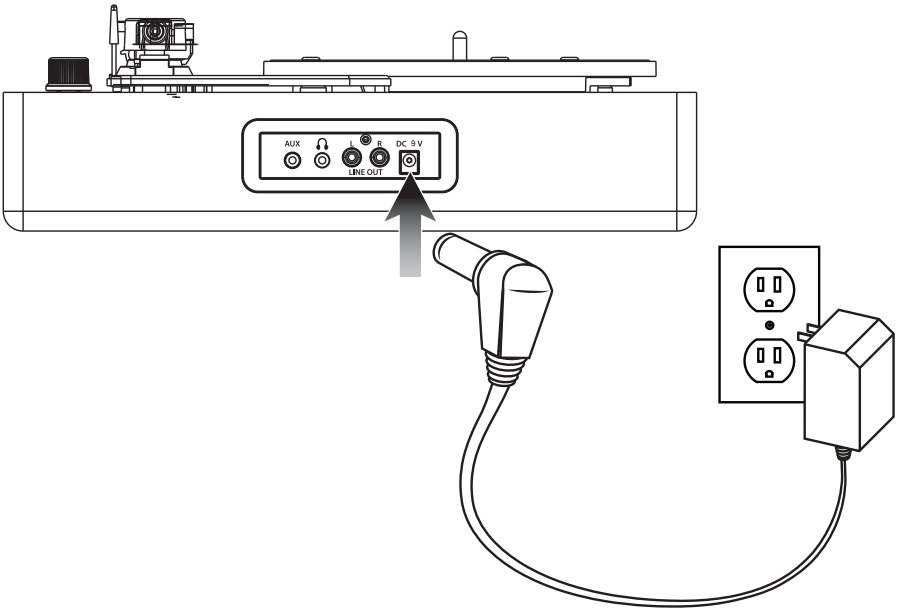

Orientation

Main Features

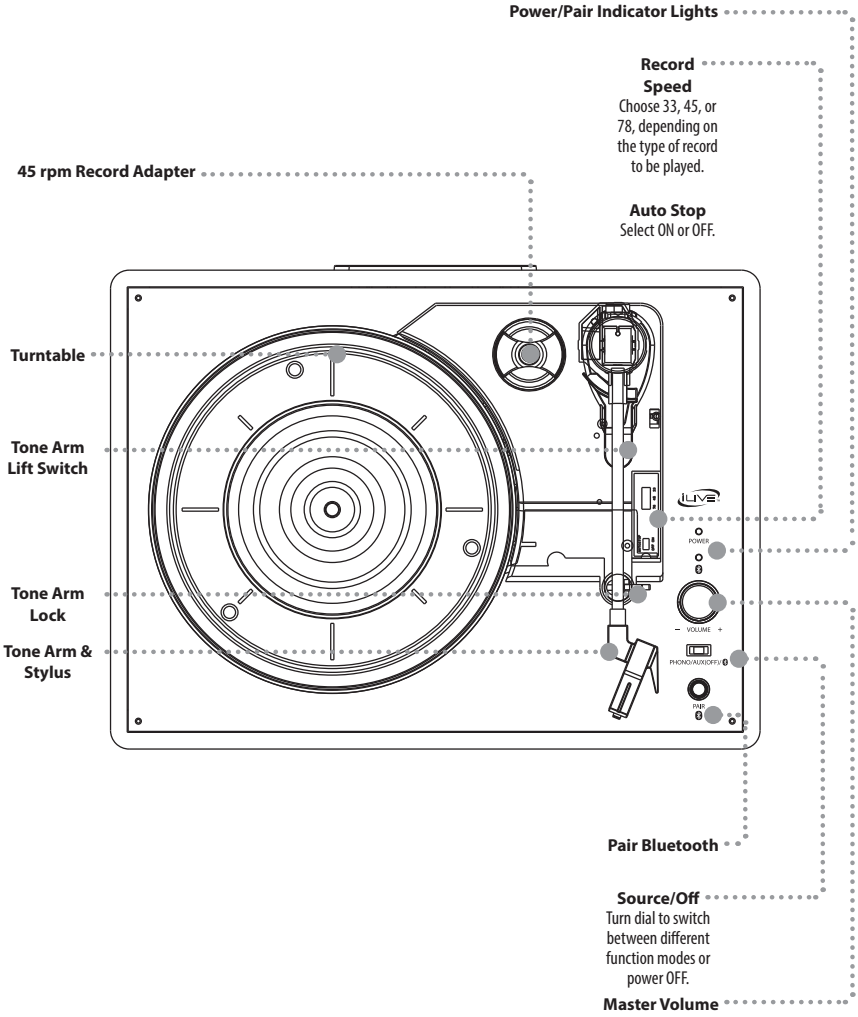

Rear Inputs

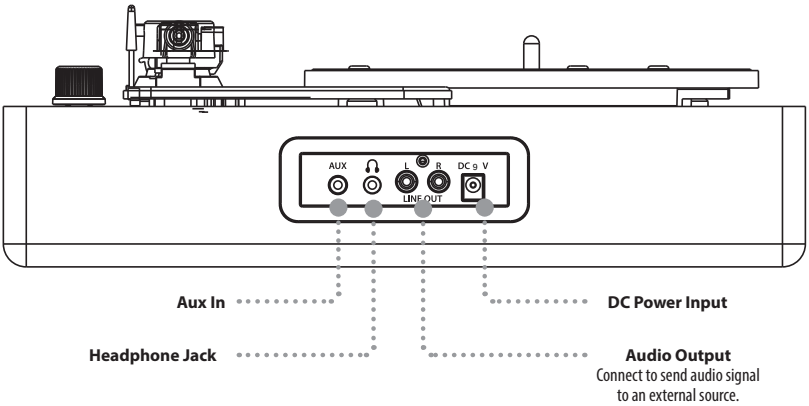
AUX
L
R
DC 9 V
LINE OUT
Aux In
DC Power Input
Headphone Jack
Audio Output
Connect to send audio signal
to an external source.

Operation

Playing a Record

It is recommended that you use extreme care when manipulating the tone arm, stylus, and other components of this turntable. These parts are very sensitive and can easily break or become damaged if they are carelessly handled.

1. Set the **Source Dial** to **Phono**.
2. Open the turntable, remove the shroud that protects the stylus, and release the lock that holds the Tone Arm in it's resting position.

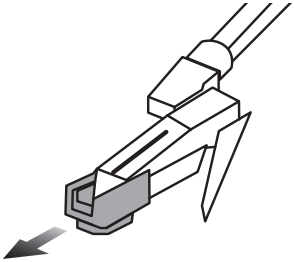

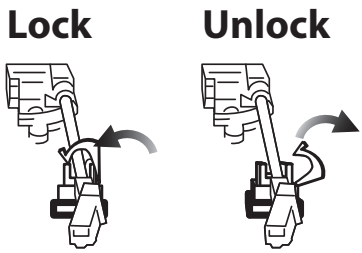

3. Select the correct turntable speed based on the type of record you wish to play, and place the record on the turntable. **If you are playing a 45 rpm record,** use the included adapter and place it between the turntable and the record.
4. Use the **Tone Arm Lift Switch** to raise the **Tone Arm** from its catch.
5. Using your hand, *gently* swing the **Tone Arm** into the desired location over the record. The turntable will start spinning as the Tone Arm is moved into position.
6. Use the **Tone Arm Lift Switch** to safely lower the stylus onto the record.
   Using the Lift Switch instead of your hand will reduce the chance of accidentally damaging the record or the stylus.
7. Slide the **Auto Stop Switch** to **ON** to enable the Auto Stop feature. When the record is finished playing, it will automatically stop the turntable. Use the **Lift Switch** to raise the stylus off of the record, and *gently* return the Tone Arm to the catch by hand.
   Note: Some records place their Auto Stop area outside of the range of this unit. In these cases, the record will stop playing before the last track is reached. Set the Auto Stop Switch to OFF and use the Tone Arm Lift Switch to safely raise the stylus off the record when the end of the record has been reached.
8. When not in use, secure and lock the Tone Arm in its resting position and replace the protective shroud over the stylus. This will minimize the risk of accidental damage to these sensitive parts.

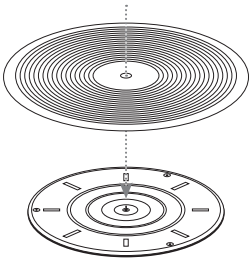

33 1/3 rpm
12in diameter

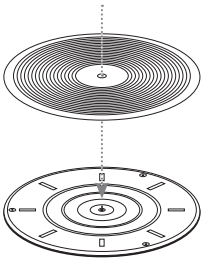

78 rpm
10in diameter

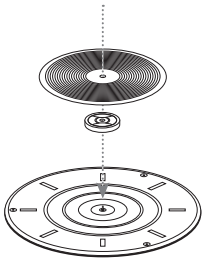

45 rpm & adapter
7in diameter

Bluetooth

Pairing a Bluetooth Device

1. Set the **Source** to and press and hold the **Play/Pause/Pair** button.
   The pairing indicator will flash blue quickly. When pairing, remain within 3 feet of the unit.

2. Using the controls on your Bluetooth device, search for and select **ITTB476** in your Bluetooth settings to pair. If your device requests a password, enter the default password **0 0 0 0** .
   Refer to the user's manual for your specific device for instructions on pairing and connecting Bluetooth devices.

3. When successfully paired and connected, an audible chime will sound and the **Pairing Indicator** on the display will stop flashing.
   *After initial pairing, the unit will stay paired unless unpaired manually by the user or erased due to a reset of the device. If your device should become unpaired or you find it is unable to connect, repeat the above steps or press & hold the **Play/Pause/Pair** button again.*

Playing Audio Wirelessly

1. After pairing to a Bluetooth device, use the controls on your connected Bluetooth Device to select a track.

2. Play, pause or skip a selected track using the controls on the connected Bluetooth Device or the controls on the turntable.

3. Audio played through the connected Bluetooth device will now be heard through the speakers.

Connecting to External Systems

RCA Audio Output

Requires RCA audio cables (red/white, not included). Use to connect the turntable to an external stereo, television, or other source.

1. Connect RCA audio cables to the **RCA Audio Output** on the back of the turntable, and to the **audio input** of an external stereo system.
2. Adjust the external stereo system to accept input from the turntable.
3. Audio played through the turntable will now be heard through the connected stereo system.

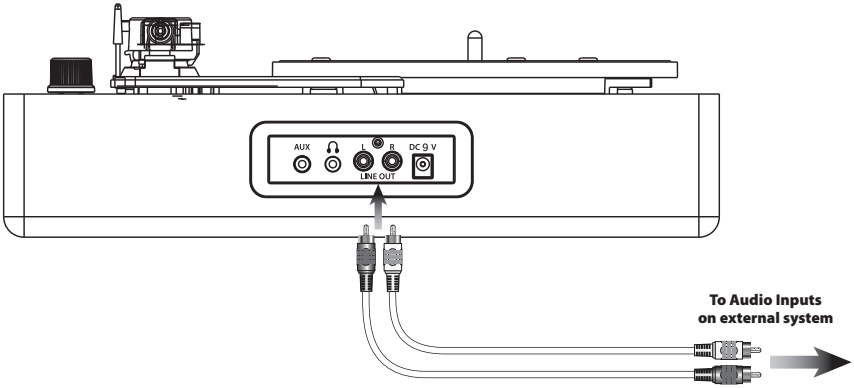

Connecting Devices to the Turntable

Using the Aux In (3.5mm Audio Input)

Requires 3.5 mm audio input cable (not included).

Note: When the Source selector is set to Aux In, this also powers the unit OFF. When a 3.5mm audio cable is plugged into the unit, it will automatically detect the input and power ON in Aux In mode. A light will indicate that the unit is ON and working.

1. Plug a 3.5 mm audio input cable into the **Aux In** on the unit and the audio output/headphone output on an MP3 Player or other audio source.
2. Set the **Source Dial** to **Aux** and use the controls on your connected music player to select and play audio.
3. Audio played through the connected device will now be heard through the speakers.

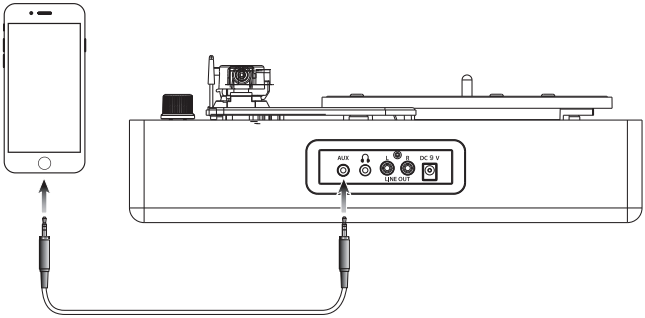

Using the Headphone Jack

Requires 3.5 mm audio input cable (not included).

1. Plug a 3.5 mm audio input cable into the **Headphone Jack** on the unit and the audio input/headphone jack on a pair of headphones.
2. Audio played from the turntable will now be heard through the headphones.

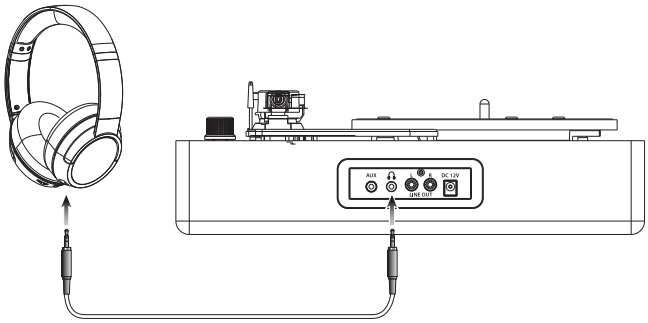

Company Information

Contact Information

Website: www.iLiveElectronics.com

Email Support: prodinfo@dpiinc.com

Email Parts: partsinfo@dpiinc.com

Phone Support: 1-888-999-4215

Warranty

For Warranty Information and the User's Guide, go to:
www.iLiveElectronics.com

International Support

To download this User's Guide in English, Spanish, and French, or to get answers to frequently asked questions, visit the support section at: **www.iLiveElectronics.com**

Para descargar este Manual del Usuario en inglés, español y francés, o para obtener respuestas a preguntas frecuentes, visite la sección de apoyo en: **www.iLiveElectronics.com**

Pour télécharger ce guide de l'utilisateur en anglais, espagnol ou français, ou pour obtenir des réponses à des questions fréquemment posées, consultez la rubrique d'assistance sur: **www.iLiveElectronics.com**

Made Green

Protect for Today
Sustain for Tomorrow

Copyright © 2016 Digital Products International (DPI, Inc.) All other trademarks appearing herein are the property of their respective owners. Specifications are subject to change without notice.