1190
ILAC MRA

Specific Absorption Rate (SAR) Test Report
for
Giant International (USA), Ltd.
on the
Wireless Media Player

Report No.	**: FA533150-01-1-2-01**
Trade Name	**: Tao**
Model Name	**: WMP235**
FCC ID	**: S26-WMP235**
IC ID	**: 5757A-WMP235**
Date of Testing	**: Apr. 14, 2005**
Date of Report	**: Aug. 08, 2005**
Date of Review	**: Aug. 08, 2005**

- The test results refer exclusively to the presented test model / sample only.
- Without written approval of SPORTON International Inc., the test report shall not be reproduced except in full.

SPORTON International Inc.

6F, No.106, Sec. 1, Hsin Tai Wu Rd., Hsi Chih, Taipei Hsien, Taiwan, R.O.C.

©2004 SPORTON International Inc..SAR Testing Lab
This report shall not be reproduced except in full, without the written approval of Sporton. ***Rev.01***

Table of Contents

1. Statement of Compliance 1
2. Administration Data 2
2.1. Testing Laboratory 2
2.2. Detail of Applicant 2
2.3. Detail of Manufacturer 2
2.4. Application Detail 2
3. Scope 3
3.1. Description of Device Under Test (DUT) 3
3.2. Product Photo 4
3.3. Applied Standards: 5
3.4. Device Category and SAR Limits 6
3.5. Test Conditons 6
3.5.1. Ambient Condition: ---------- 6
3.5.2. Test Configuration: ---------- 6
4. Specific Absorption Rate (SAR) 7
4.1. Introduction 7
4.2. SAR Definition 7
5. SAR Measurement Setup 8
5.1. DASY4 E-Field Probe System 9
5.1.1. ET3DV6 E-Field Probe Specification ---------- 10
5.1.2. ET3DV6 E-Field Probe Calibration ---------- 10
5.2. DATA Acquisition Electronics (DAE) 11
5.3. Robot 12
5.4. Measurement Server 12
5.5. SAM Twin Phantom 12
5.6. Data Storage and Evaluation 14
5.6.1. Data Storage ---------- 14
5.6.2. Data Evaluation ---------- 14
5.7. Test Equipment List 17
6. Tissue Simulating Liquids 18
7. Uncertainty Assessment 20
8. SAR Measurement Evaluation 22
8.1. Purpose of System Performance check 22
8.2. System Setup 22
8.3. Validation Results 23
9. Description for DUT Testing Position 24
10. Measurement Procedures 25
10.1. Spatial Peak SAR Evaluation 25
10.2. Scan Procedures 26
10.3. SAR Averaged Methods 26
11. SAR Test Results 27
11.1. Keypad Up 27
11.2. Keypad Down 27

©2004 SPORTON International Inc..SAR Testing Lab
Tel:886-22696-2468
Fax:886-2-2696-2255

12.References 28

Appendix A – System Performance Check Data
Appendix B – SAR Measurement Data
Appendix C – Calibration Data

©2004 SPORTON International Inc..SAR Testing Lab
Tel:886-22696-2468
Fax:886-2-2696-2255

1. *Statement of Compliance*

The Specific Absorption Rate (SAR) maximum result found during testing for the **Giant International (USA), Ltd. Wireless Media Player Tao WMP235 is 0.0000375 W/Kg on the WLAN body SAR** with expanded uncertainty 20.6%. It is in compliance with Specific Absorption Rate (SAR) for general population/uncontrolled exposure limits specified in FCC 47 CFR part 2 (2.1093) and ANSI/IEEE C95.1-1999 and had been tested in accordance with the measurement methods and procedures specified in OET Bulletin 65 Supplement C (Edition 01-01).

Tested by

Nilson She

Nilson She
Test Engineer

Approved by

Daniel Lee 8/8/2005

Dr. C.H. Daniel Lee
SAR Lab. Manager

©2004 SPORTON International Inc..SAR Testing Lab
This report shall not be reproduced except in full, without the written approval of Sporton. Rev.01

6F, No.106, Sec.1, Hsin Tai Wu Rd., Hsi Chih, Taipei Hsien, Taiwan, R.O.C. TEL:886-2-26962468 FAX:886-2-26962255

Scope of NVLAP Accreditation: IEC/CISPR 22, FCC Method - 47 CFR Part 15 - Digital Devices, AS-3548

2. Administration Data

2.1. Testing Laboratory

Company Name : Sporton International Inc.
Department : Antenna Design/SAR
Address : No.52, Hwa-Ya 1st RD., Hwa Ya Technology Park, Kwei-Shan Hsiang, TaoYuan Hsien, Taiwan, R.O.C.
Telephone Number : 886-3-327-3456
Fax Number : 886-3-327-0973

2.2. Detail of Applicant

Company Name : Giant International (USA), Ltd.
Address : 3500 Lenox Road, Suite 680, Atlanta, GA 30326, U.S.A.

2.3. Detail of Manufacturer

Company Name : DONG GUAN G-COM COMPUTER CO., LTD.
Address : 1st Row Yin Shan Rd., Yin Hwu Industrial Area Qingxi Town DongGuan City Guang Dong China

2.4. Application Detail

Date of reception of application: Mar. 31, 2005
Start of test : Apr. 14, 2005
End of test : Apr. 14, 2005

3. Scope

3.1. Description of Device Under Test (DUT)

DUT Type :	Wireless Media Player
Trade Name :	Tao
Model Name :	WMP235
FCC ID :	S26-WMP235
IC ID :	5757A-WMP235
Type of Modulation :	DSSS
Frequency Range :	2400~2483.5 MHz
Antenna Connector :	U.F.L.
Antenna Type :	Pifa Antenna
Maximum Output Power to Antenna :	15.1 dBm
Power Rating (DC/AC Voltage) :	DC 3.3V
DUT Stage :	Production Unit
Application Type :	Certification

©2004 SPORTON International Inc..SAR Testing Lab

This report shall not be reproduced except in full, without the written approval of Sporton. Rev.01

3.2. Product Photo

3.3. Applied Standards:

The Specific Absorption Rate (SAR) testing specification, method and procedure for this Wireless Media Player is in accordance with the following standards:

47 CFR Part 2 (2.1093),
IEEE C95.1-1999,
IEEE C95.3-2002,
IEEE P1528 -2003, and
OET Bulletin 65 Supplement C (Edition 01-01)

3.4. Device Category and SAR Limits

This device belongs to portable device category because its radiating structure is allowed to be used within 20 centimeters of the body of the user.

Limit for General Population/Uncontrolled exposure should be applied for this device, it is 1.6 W/kg as averaged over any 1 gram of tissue.

3.5. Test Conditons

3.5.1. Ambient Condition:

Item	802.11b
Ambient Temperature (°C)	20 ~ 24℃
Tissue simulating liquid temperature (°C)	22.7℃
Humidity (%)	< 60%

3.5.2. Test Configuration:

The data rate for SAR testing is 11Mbps for 802.11b. Engineering testing software installed on the DUT can provide continuous transmitting RF signal. This RF signal utilized in SAR measurement has almost 100% duty cycle and its crest factor is 1. The measurements were performed on the lowest, middle, and highest channel, i.e. channel 1, channel 6, and channel 11 for each testing position.

4. Specific Absorption Rate (SAR)

4.1. Introduction

SAR is related to the rate at which energy is absorbed per unit mass in an object exposed to a radio field. The SAR distribution in a biological body is complicated and is usually carried out by experimental techniques or numerical modeling. The FCC recommends limits for two tiers of groups, occupational/controlled and general population/uncontrolled, based on a person's awareness and ability to exercise control over his or her exposure. In general, occupational/controlled exposure limits are higher than the limits for general population/uncontrolled.

4.2. SAR Definition

The SAR definition is the time derivative (rate) of the incremental energy (dW) absorbed by (dissipated in) an incremental mass (dm) contained in a volume element (dv) of a given density.
ρ). The equation description is as below:

$$\mathbf{SAR} = \frac{d}{dt}\left(\frac{dW}{dm}\right) = \frac{d}{dt}\left(\frac{dW}{\rho dv}\right)$$

SAR is expressed in units of Watts per kilogram (W/kg)

SAR measurement can be either related to the temperature elevation in tissue by

$$\mathbf{SAR} = C\frac{\delta T}{\delta t}$$

, where C is the specific head capacity, δT is the temperature rise and δt the exposure duration,

or related to the electrical field in the tissue by

$$\mathbf{SAR} = \frac{\sigma |E|^2}{\rho}$$

, where σ is the conductivity of the tissue, ρ is the mass density of the tissue and ***E*** is the rms electrical field strength.

However for evaluating SAR of low power transmitter, electrical field measurement is typically applied.

5. SAR Measurement Setup

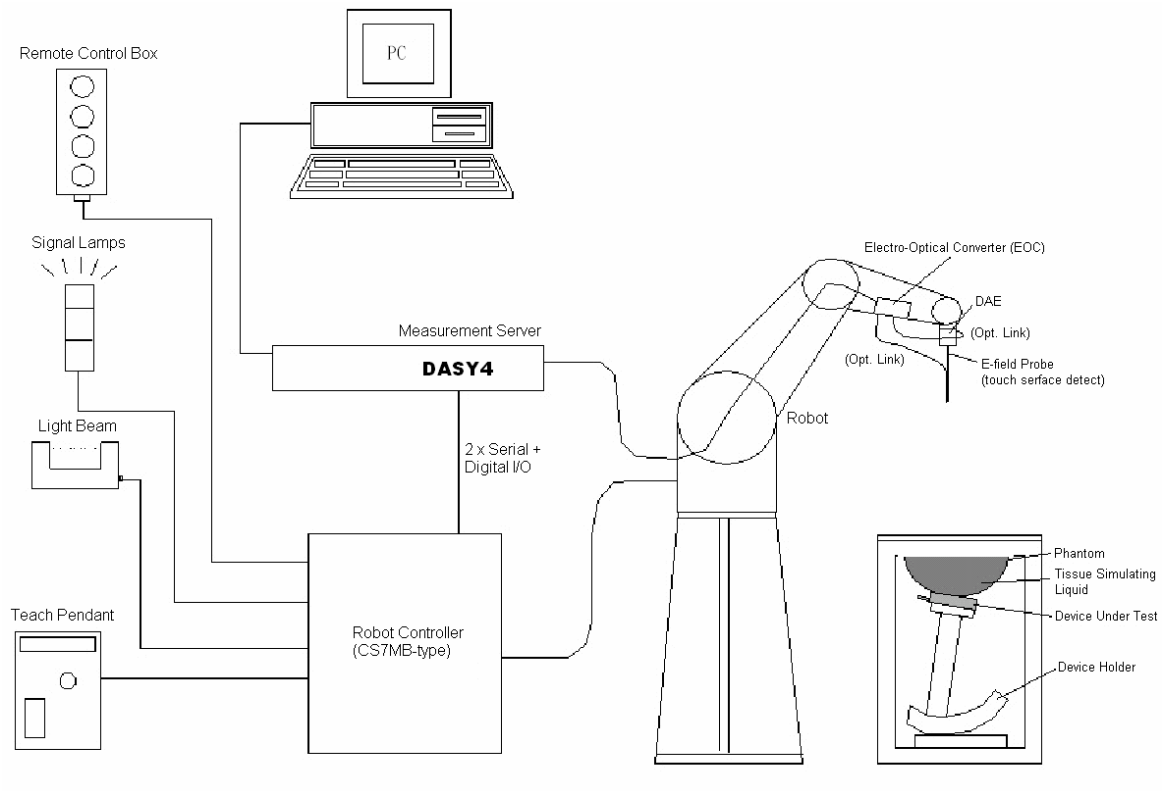

Fig. 5.1 DASY4 system

The DASY4 system for performance compliance tests is illustrated above graphically. This system consists of the following items:

- A standard high precision 6-axis robot with controller, a teach pendant and software
- A data acquisition electronic (DAE) attached to the robot arm extension
- A dosimetric probe equipped with an optical surface detector system
- The electro-optical converter (ECO) performs the conversion between optical and electrical signals
- A measurement server performs the time critical tasks such as signal filtering, control of the robot operation and fast movement interrupts.
- A probe alignment unit which improves the accuracy of the probe positioning
- A computer operating Windows XP
- DASY4 software
- Remove control with teach pendant and additional circuitry for robot safety such as warming lamps, etc.
- The SAM twin phantom
- A device holder
- Tissue simulating liquid
- Dipole for evaluating the proper functioning of the system

Some of the components are described in details in the following sub-sections.

5.1. DASY4 E-Field Probe System

The SAR measurement is conducted with the dosimetric probe ET3DV6 (manufactured by SPEAG). The probe is specially designed and calibrated for use in liquid with high permittivity. The dosimetric probe has special calibration in liquid at different frequency. This probe has a built in optical surface detection system to prevent from collision with phantom.

5.1.1. ET3DV6 E-Field Probe Specification

Construction	Symmetrical design with triangular core Built-in optical fiber for surface detection system Built-in shielding against static charges PEEK enclosure material (resistant to organic solvents)
Calibration	Simulating tissue at frequencies of 900MHz, 1.8GHz and 2.45GHz for brain and muscle (accuracy ±8%)
Frequency	10 MHz to > 3 GHz
Directivity	± 0.2 dB in brain tissue (rotation around probe axis) ± 0.4 dB in brain tissue (rotation perpendicular to probe axis)
Dynamic Range	5 μW/g to > 100mW/g; Linearity: ±0.2dB
Surface Detection	± 0.2 mm repeatability in air and clear liquids on reflecting surface
Dimensions	Overall length: 330mm Tip length: 16mm Body diameter: 12mm Tip diameter: 6.8mm Distance from probe tip to dipole centers: 2.7mm
Application	General dosimetry up to 3GHz Compliance tests for mobile phones and Wireless LAN Fast automatic scanning in arbitrary phantoms

Fig. 5.2 Probe setup on robot

5.1.2. ET3DV6 E-Field Probe Calibration

Each probe needs to be calibrated according to a dosimetric assessment procedure with accuracy better than ± 10%. The spherical isotropy shall be evaluated and within ± 0.25dB. The sensitivity parameters (NormX, NormY, and NormZ), the diode compression parameter (DCP) and the conversion factor (ConvF) of the probe are tested. The calibration data are as below:

Sensitivity	X axis : 1.68 µV		Y axis : 1.70 µV	Z axis : 1.74 µV
Diode compression point	X axis : 94 mV		Y axis : 94 mV	Z axis : 94 mV
Conversion factor (Head / Body)	**Frequency (MHz)**	**X axis**	**Y axis**	**Z axis**
	2350~2550	4.56 / 4.26	4.56 / 4.26	4.56 / 4.26
Boundary effect (Head / Body)	**Frequency (MHz)**	**Alpha**	**Depth**	
	2350~2550	0.65 / 0.72	2.22 / 2.00	

NOTE:

1. The probe parameters have been calibrated by the SPEAG.
2. For the detailed calibration data is shown in Appendix C.

5.2. DATA Acquisition Electronics (DAE)

The data acquisition electronics (DAE4) consists of a highly sensitive electrometer-grade preamplifier with auto-zeroing, a channel and gain-switching multiplexer, a fast 16 bit AD-converter and a command decoder and control logic unit. Transmission to the measurement server is accomplished through an optical downlink for data and status information as well as an optical uplink for commands and the clock.

The mechanical probe mounting device includes two different sensor systems for frontal and sideways probe contacts. They are used for mechanical surface detection and probe collision detection.

The input impedance of the DAE4 is 200M Ohm; the inputs are symmetrical and floating. Common mode rejection is above 80dB.

Calibration data is attached in Appendix C.

5.3. Robot

The DASY4 system uses the high precision robots RX90BL type out of the newer series from Stäubli SA (France). For the 6-axis controller DASYS system, the CS7MB robot controller version from Stäubli is used. The RX robot series have many features that are important for our application:

- High precision (repeatability 0.02 mm)
- High reliability (industrial design)
- Jerk-free straight movements
- Low ELF interference (the closed metallic construction shields against motor control fields)
- 6-axis controller

5.4. Measurement Server

The DASY4 measurement server is based on a PC/104 CPU board with
166 MHz CPU
32 MB chipset and
64 MB RAM.

Communication with
the DAE4 electronic box
the 16-bit AD-converter system for optical detection and digital I/O interface.

The measurement server performs all the real-time data evaluation for field measurements and surface detection, controls robot movements and handles safety operations.

5.5. SAM Twin Phantom

The SAM twin phantom is a fiberglass shell phantom with 2mm shell thickness (except the ear region where shell thickness increases to 6mm). It has three measurement areas:

- Left head
- Right head
- Flat phantom

The bottom plate contains three pair of bolts for locking the device holder. The device holder positions are adjusted to the standard measurement positions in the three sections.

A white cover is provided to tap the phantom during off-periods to prevent water evaporation and changes in the liquid parameters.

On the phantom top, three reference markers are provided to identify the phantom position with respect to the robot.

The phantom can be used with the following tissue simulating liquids:
*Water-sugar based liquid
*Glycol based liquids

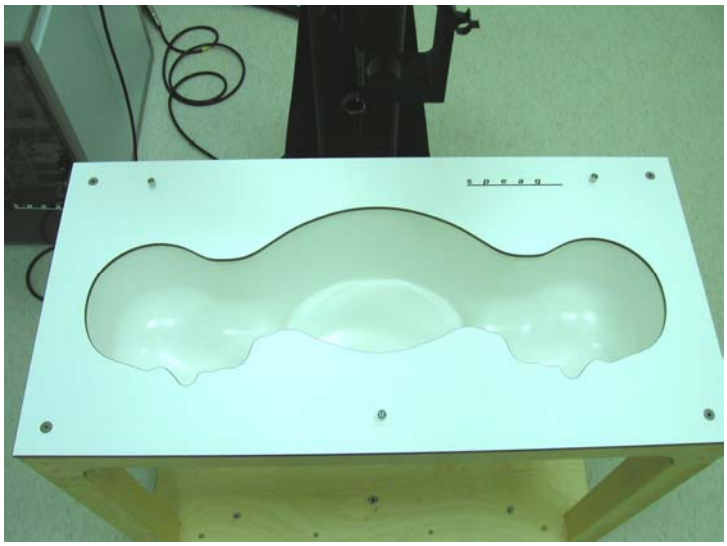

Fig. 5.3 Top view of twin phantom

Fig. 5.4 Bottom view of twin phantom

5.6. Data Storage and Evaluation

5.6.1. Data Storage

The DASY4 software stores the assessed data from the data acquisition electronics as raw data (in microvolt readings from the probe sensors), together with all the necessary software parameters for the data evaluation (probe calibration data, liquid parameters and device frequency and modulation data) in measurement files with the extension .DA4. The postprocessing software evaluates the desired unit and format for output each time the data is visualized or exported. This allows verification of the complete software setup even after the measurement and allows correction of erroneous parameter settings. For example, if a measurement has been performed with an incorrect crest factor parameter in the device setup, the parameter can be corrected afterwards and the data can be reevaluated.

The measured data can be visualized or exported in different units or formats, depending on the selected probe type (e.g., [V/m], [A/m], [mW/g]). Some of these units are not available in certain situations or give meaningless results, e.g., a SAR-output in a loseless media, will always be zero. Raw data can also be exported to perform the evaluation with other software packages.

5.6.2. Data Evaluation

The DASY4 postprocessing software (SEMCAD) automatically executes the following procedures to calculate the field units from the microvolt readings at the probe connector. The parameters used in the evaluation are stored in the configuration modules of the software：

Probe parameters：	- Sensitivity	$Norm_i$, a_{i0}, a_{i1}, a_{i2}
	- Conversion factor	$ConvF_i$
	- Diode compression point	dcp_i
Device parameters：	- Frequency	f
	- Crest factor	cf
Media parameters：	- Conductivity	σ
	- Density	ρ

These parameters must be set correctly in the software. They can be found in the component documents or they can be imported into the software from the configuration files issued for the DASY components. In the direct measuring mode of the multimeter option, the parameters of the actual system setup are used. In the scan visualization and export modes, the parameters stored in the corresponding document files are used.
The first step of the evaluation is a linearization of the filtered input signal to account for the compression characteristics of the detector diode. The compensation depends on the input signal, the diode type and the DC-transmission factor from the diode to the evaluation electronics. If the exciting field is pulsed, the crest factor of the signal must be known to correctly compensate for peak power. The formula for each channel

can be given as :

$$Vi = U_i + U_i^2 \cdot \frac{cf}{dcp_i}$$

with ***V_i = compensated signal of channel i (i = x, y, z)***
U_i = input signal of channel i (i = x, y, z)
cf = crest factor of exciting field (DASY parameter)
dcp_i = diode compression point (DASY parameter)

From the compensated input signals, the primary field data for each channel can be evaluated :

E-field probes : $E_i = \sqrt{\frac{V_i}{Norm_i ConvF}}$

H-field probes : $H_i = \sqrt{V_i} \frac{a_{i0+} a_{i1} f + a_{i2} f^2}{f}$

with ***V_i*** = compensated signal of channel *i* (*i* = x, y, z)
$Norm_i$ = sensor sensitivity of channel i (*i* = x, y, z)
μ V/(V/m)2 for E-field Probes
ConvF = sensitivity enhancement in solution
a_{ij} = sensor sensitivity factors for H-field probes
f = carrier frequency [GHz]
E_i = electric field strength of channel *i* in V/m
H_i = magnetic field strength of channel *i* in A/m

The RSS value of the field components gives the total field strength (Hermitian magnitude) :

$$E_{tot} = \sqrt{E_X^2 + E_Y^2 + E_Z^2}$$

The primary field data are used to calculate the derived field units.

$$\text{SAR} = E_{tot}^2 \cdot \frac{\sigma}{\rho \cdot 1000}$$

with ***SAR*** = local specific absorption rate in mW/g
Etot = total field strength in V/m
σ = conductivity in [mho/m] or [Siemens/m]
ρ = equivalent tissue density in g/ cm^3

∗Note that the density is set to 1, to account for actual head tissue density rather than the density of the tissue simulating liquid.

The power flow density is calculated assuming the excitation field to be a free space field.

$$P_{pwe} = \frac{E_{tot}^2}{3770} \quad \text{or} \quad P_{pwe} = H_{tot}^2 \cdot 37.7$$

with P_{pwe} = equivalent power density of a plane wave in mW/cm^2
E_{tot} = total electric field strength in V/m
H_{tot} = total magnetic field strength in A/m

5.7. Test Equipment List

Manufacture	Name of Equipment	Type/Model	Serial Number	Calibration	
				Last Cal.	Due Date
SPEAG	Dosimetric E-Filed Probe	ET3DV6	1788	Sep. 30, 2004	Sep. 30, 2005
SPEAG	835MHz System Validation Kit	D835V2	499	Feb. 12, 2004	Feb. 12, 2006
SPEAG	900MHz System Validation Kit	D900V2	190	July 17, 2003	July 17, 2005
SPEAG	1800MHz System Validation Kit	D1800V2	2d076	July 16, 2003	July 16, 2005
SPEAG	1900MHz System Validation Kit	D1900V2	5d041	Feb. 17, 2004	Feb. 17, 2006
SPEAG	2450MHz System Validation Kit	D2450V2	736	Aug. 26, 2003	Aug. 26, 2005
SPEAG	Data Acquisition Electronics	DAE3	577	Nov. 17, 2004	Nov. 17, 2005
SPEAG	Device Holder	N/A	N/A	NCR	NCR
SPEAG	Phantom	QD 000 P40 C	TP-1150	NCR	NCR
SPEAG	Robot	Staubli RX90BL	F03/5W15A1/A/01	NCR	NCR
SPEAG	Software	DASY4 V4.5 Build 19	N/A	NCR	NCR
SPEAG	Software	SEMCAD V1.8 Build 145	N/A	NCR	NCR
SPEAG	Measurement Server	SE UMS 001 BA	1021	NCR	NCR
Agilent	S-Parameter Network Analyzer (PNA)	E8358A	US40260131	Nov. 24,2004	Nov. 24, 2005
Agilent	Dielectric Probe Kit	85070D	US01440205	NCR	NCR
Agilent	Dual Directional Coupler	778D	50422	NCR	NCR
Agilent	Power Amplifier	8449B	3008A01917	NCR	NCR
R & S	Radio Communication Tester	CMU200	105934	Aug. 24, 2004	Aug 24, 2005
Agilent	Power Meter	E4416A	GB41292344	Jan. 21, 2005	Jan. 21, 2006
Agilent	Power Sensor	E9327A	US40441548	Jan. 28, 2005	Jan. 28, 2006
Agilent	Signal Generator	E8247C	MY43320596	Feb. 10, 2004	Feb. 10, 2006
Agilent	Base Station Emulator	E5515C	GB43460754	Jan. 12, 2004	Jan. 12, 2006

Table 5.1 Test Equipment List

6. Tissue Simulating Liquids

For the measurement of the field distribution inside the SAM phantom with DASY4, the phantom must be filled with around 25 liters of homogeneous body tissue simulating liquid. The liquid height from the bottom of the phantom body is 15.2 centimeters, which is shown in Fig. 6.1.

The following ingredients for tissue simulating liquid are used:

- **Water**: deionized water (pure H_20), resistivity ≧16MΩ - as basis for the liquid
- **Sugar**: refined sugar in crystals, as available in food shops – to reduce relative permittyvity
- **Salt**: pure NaCl – to increase conductivity
- **Cellulose**: Hydroxyethyl-cellulose, medium viscosity (75-125 mPa.s, 2% in water, 20°C), CAS#54290-to increase viscosity and to keep sugar in solution.
- **Preservative**: Preventol D-7 Bayer AG, D-51368 Leverkusen, CAS#55965-84-9- to prevent the spread of bacteria and molds.
- **DGMBE**: Deithlenglycol-monobuthyl ether (DGMBE), Fluka Chemie GmbH, CAS#112-34-5 – to reduce relative permittivity.

Table 6.1 gives the recipes for one liter of tissue simulating liquid for frequency band 2450 MHz.

Ingredient	MSL-2450
Water	698.3 ml
DGMBE	301.7 ml
Total amount	1 liter (1.0 kg)
Dielectric Parameters at 22°	f = 2450MHz ε_r= 52.5±5%, σ = 2.00±5% S/m

Table 6.1

The dielectric parameters of the liquids were verified prior to the SAR evaluation using an Agilent 85070D Dielectric Probe Kit and an Agilent E8358A Network Analyzer.

Table 6.2 shows the measuring results for muscle simulating liquid.

Bands	Frequency(MHz)	Permittivity (ε_r)	Conductivity (σ)	Measurement date
2450 MHz	2412	51.6	1.95	Apr. 14, 2005
	2437	51.6	1.98	
	2462	51.5	2.01	

Table 6.2

The measuring data are consistent with $\varepsilon_r = 52.5 \pm 5\%$ and $\sigma = 2.00 \pm 5\%$.

Fig. 6.1

7. Uncertainty Assessment

The component of uncertainly may generally be categorized according to the methods used to evaluate them. The evaluation of uncertainly by the statistical analysis of a series of observations is termed a Type A evaluation of uncertainty. The evaluation of uncertainty by means other than the statistical analysis of a series of observation is termed a Type B evaluation of uncertainty. Each component of uncertainty, however evaluated, is represented by an estimated standard deviation, termed standard uncertainty, which is determined by the positive square root of the estimated variance.

A Type A evaluation of standard uncertainty may be based on any valid statistical method for treating data. This includes calculating the standard deviation of the mean of a series of independent observations; using the method of least squares to fit a curve to the data in order to estimate the parameter of the curve and their standard deviations; or carrying out an analysis of variance in order to identify and quantify random effects in certain kinds of measurement.

A type B evaluation of standard uncertainty is typically based on scientific judgment using all of the relevant information available. These may include previous measurement data, experience and knowledge of the behavior and properties of relevant materials and instruments, manufacture's specification, data provided in calibration reports and uncertainties assigned to reference data taken from handbooks. Broadly speaking, the uncertainty is either obtained from an outdoor source or obtained from an assumed distribution, such as the normal distribution, rectangular or triangular distributions indicated in Table 7.1

Uncertainty Distributions	Normal	Rectangular	Triangular	U-shape
Multiplying factor[(a)]	1/k [(b)]	$1/\sqrt{3}$	$1/\sqrt{6}$	$1/\sqrt{2}$

(a) standard uncertainty is determined as the product of the multiplying factor and the estimated range of variations in the measured quantity
(b) k is the coverage factor

Table 7.1

The combined standard uncertainty of the measurement result represents the estimated standard deviation of the result. It is obtained by combining the individual standard uncertainties of both Type A and Type B evaluation using the usual "root-sum-squares" (RSS) methods of combining standard deviations by taking the positive square root of the estimated variances.

Expanded uncertainty is a measure of uncertainty that defines an interval about the measurement result within which the measured value is confidently believed to lie. It is obtained by multiplying the combined standard uncertainty by a coverage factor. Typically, the coverage factor ranges from 2 to 3. Using a coverage factor allows the true value of a measured quantity to be specified with a defined probability within the specified uncertainty range. For purpose of this document, a coverage factor two is used, which corresponds to confidence interval of about 95 %. The DASY4 uncertainty Budget is showed in Table 7.2.

Error Description	Uncertainty Value ± %	Probability Distribution	Divisor	C_i 1g	Standard Unc. (1-g)	v_i or V_{eff}
Measurement System						
Probe Calibration	± 4.8	Normal	1	1	±4.8	∞
Axial Isotropy	± 4.7	Rectangular	√3	0.7	±1.9	∞
Hemispherical Isotropy	± 9.6	Rectangular	√3	0.7	±3.9	∞
Boundary Effect	± 1.0	Rectangular	√3	1	±0.6	∞
Linearity	± 4.7	Rectangular	√3	1	±2.7	∞
System Detection Limit	± 1.0	Rectangular	√3	1	±0.6	∞
Readout Electronics	± 1.0	Normal	1	1	±1.0	∞
Response Time	± 0.8	Rectangular	√3	1	± 0.5	∞
Integration time	± 2.6	Rectangular	√3	1	± 1.5	∞
RF Ambient Conditions	± 3.0	Rectangular	√3	1	±1.7	∞
Probe Positioner Mech. Tolerance	± 0.4	Rectangular	√3	1	±0.2	∞
Probe Positioning with respect to Phantom Shell	± 2.9	Rectangular	√3	1	±1.7	∞
Extrapolation and Interpolation Algorithms for Max. SAR Evaluation	± 1.0	Rectangular	√3	1	±0.6	∞
Test sample Related						
Test sample Positioning	±2.9	Normal	1	1	±2.9	145
Device Holder Uncertainty	±3.6	Normal	1	1	±3.6	5
Output Power Variation-SAR drift measurement	±5.0	Rectangular	√3	1	±2.9	∞
Phantom and Setup						
Phantom uncertainty(Including shap and thickness tolerances)	±4.0	Rectangular	√3	1	±2.3	∞
Liquid Conductivity Target tolerance	±5.0	Rectangular	√3	0.64	±1.8	∞
Liquid Conductivity measurement uncertainty	±2.5	Normal	1	0.64	±1.6	∞
Liquid Permittivity Target tolerance	±5.0	Rectangular	√3	0.6	±1.7	∞
Liquid Permittivity measurement uncertainty	±2.5	Normal	1	0.6	±1.5	∞
Combined standard uncertainty					±10.3	330
Coverage Factor for 95 %		***K=2***				
Expanded uncertainty (Coverage factor = 2)			**Normal (k=2) 27**		**±20.6**	

Table 7.2. Uncertainty Budget of DASY

8. SAR Measurement Evaluation

Each DASY system is equipped with one or more system validation kits. These units, together with the predefined measurement procedures within the DASY software, enable the user to conduct the system performance check and system validation. System validation kit includes a dipole, tripod holder to fix it underneath the flat phantom and a corresponding distance holder.

8.1. Purpose of System Performance check

The system performance check verifies that the system operates within its specifications. System and operator errors can be detected and corrected. It is recommended that the system performance check be performed prior to any usage of the system in order to guarantee reproducible results. The system performance check uses normal SAR measurements in a simplified setup with a well characterized source. This setup was selected to give a high sensitivity to all parameters that might fail or vary over time. The system check does not intend to replace the calibration of the components, but indicates situations where the system uncertainty is exceeded due to drift or failure.

8.2. System Setup

In the simplified setup for system evaluation, the DUT is replaced by a calibrated dipole and the power source is replaced by a continuous wave which comes from a signal generator at frequency 2450 MHz. The calibrated dipole must be placed beneath the flat phantom section of the SAM twin phantom with the correct distance holder. The distance holder should touch the phantom surface with a light pressure at the reference marking and be oriented parallel to the long side of the phantom. The equipment setup is shown below:

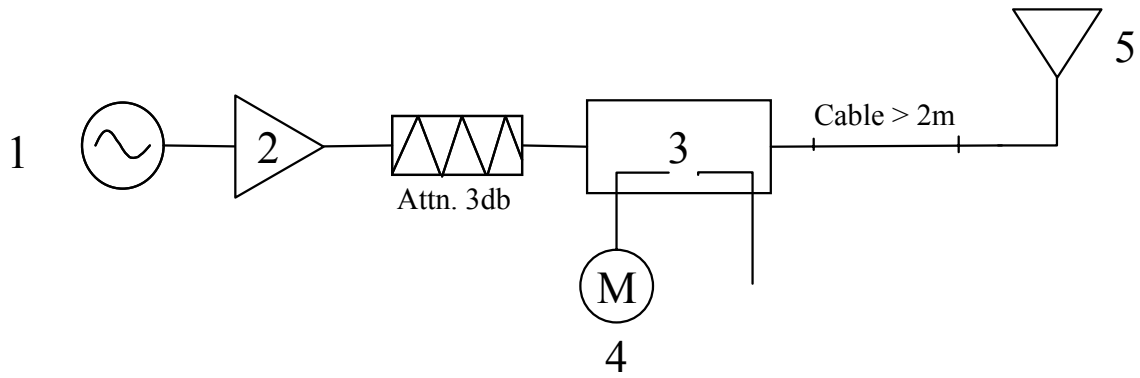

Fig. 8.1

1. Signal Generator
2. Amplifier
3. Directional Coupler
4. Power Meter
5. 2450 MHz Dipole

The output power on dipole port must be calibrated to 100 mW (20 dBm) before dipole is connected.

8.3. Validation Results

Comparing to the original SAR value provided by Speag, the validation data should within its specification of 10 %. Table 8.1 shows the target SAR and measured SAR after normalized to 1W input power.

		Target (W/kg)	Measurement data (W/kg)	Variation	Measurement date
ISM band (2450 MHz)	SAR (1g)	56	54.4	-2.9 %	Apr. 14, 2005
	SAR (10g)	25.8	25	-3.1 %	

Table 8.1

The table above indicates the system performance check can meet the variation criterion.

9. Description for DUT Testing Position

This DUT was tested in the position "Keypad Up" shown in Fig. 9.1 and "Keypad Down" shown in Fig. 9.2.

Fig. 9.1 Keypad Up

Fig. 9.2 Keypad Down

10. Measurement Procedures

The measurement procedures are as follows:

- Using engineering software to transmit RF power continuously (continuous Tx) in the low channel
- Placing the DUT in the positions described in the last section
- Setting scan area, grid size and other setting on the DASY4 software
- Taking data for the low channel
- Repeat the previous steps for the middle and high channels.

According to the IEEE P1528 draft standard, the recommended procedure for assessing the peak spatial-average SAR value consists of the following steps:

- Power reference measurement
- Area scan
- Zoom scan
- Power reference measurement

10.1. Spatial Peak SAR Evaluation

The procedure for spatial peak SAR evaluation has been implemented according to the IEEE1528-2003 standard. It can be conducted for 1g and 10g, as well as for user-specific masses. The DASY4 software includes all numerical procedures necessary to evaluate the spatial peak SAR value.

Base on the Draft: SCC-34, SC-2, WG-2-Computational Dosimetry, P1528/D1.2 (Recommended Practice for Determining the Peak Spatial-Average Specific Absorption Rate (SAR) in the Human Head from Wireless Communications Devices: Measurement Techniques), a new algorithm has been implemented. The spatial-peak SAR can be computed over any required mass.

The base for the evaluation is a "cube" measurement. The measured volume must include the 1g and 10g cubes with the highest averaged SAR values. For that purpose , the center of the measured volume is aligned to the interpolated peak SAR value of a previously performed area scan.

The entire evaluation of the spatial peak values is performed within the postprocessing engine (SEMCAD). The system always gives the maximum values for the 1g and 10g cubes. The algorithm to find the cube with highest averaged SAR is divided into the following stages:

- extraction of the measured data (grid and values) from the Zoom Scan
- calculation of the SAR value at every measurement point based on all stored data (A/D values and measurement parameters)
- generation of a high-resolution mesh within the measured volume
- interpolation of all measured values form the measurement grid to the high-resolution grid
- extrapolation of the entire 3-D field distribution to the phantom surface over the distance from sensor to surface
- calculation of the averaged SAR within masses of 1g and 10g

10.2. Scan Procedures

First **Area Scan** is used to locate the approximate location(s) of the local peak SAR value(s). The measurement grid within an **Area Scan** is defined by the grid extent, grid step size and grid offset. Next, in order to determine the EM field distribution in a three-dimensional spatial extension, **Zoom Scan** is required. The **Zoom Scan** measures 5x5x7 points with step size 8, 8 and 5 mm. The **Zoom Scan** is performed around the highest E-field value to determine the averaged SAR-distribution over 1 g.

10.3. SAR Averaged Methods

In DASY4, the interpolation and extrapolation are both based on the modified Quadratic Shepard's method. The interpolation scheme combines a least-square fitted function method and a weighted average method which are the two basic types of computational interpolation and approximation.
Extrapolation routines are used to obtain SAR values between the lowest measurement points and the inner phantom surface. The extrapolation distance is determined by the surface detection distance and the probe sensor offset. The uncertainty increases with the extrapolation distance. To keep the uncertainty within 1% for the 1 g and 10 g cubes, the extrapolation distance should not be larger than 5 mm.

11.SAR Test Results

11.1. Keypad Up

Mode	Chan.	Freq (MHz)	Modulation type	Conducted Power (dBm)	Power Drift (dB)	Measured 1g SAR (W/kg)	Limits (W/Kg)	Results
802.11b	1	2412(Low)	CCK	14.1	-	-	-	-
	6	2437(Mid)	CCK	14.4	-11.1	0.0000329	1.6	Pass
	11	2462(High)	CCK	15.1	-	-	-	-

11.2. Keypad Down

Mode	Chan.	Freq (MHz)	Modulation type	Conducted Power (dBm)	Power Drift (dB)	Measured 1g SAR (W/kg)	Limits (W/Kg)	Results
802.11b	1	2412(Low)	CCK	14.1	-	-	-	-
	6	2437(Mid)	CCK	14.4	-1.7	0.0000375	1.6	Pass
	11	2462(High)	CCK	15.1	-	-	-	-

Remark: The RF signal to noise ratio is so small that the power drift can not be kept under 2 dB.

12. References

[1] FCC 47 CFR Part 2 "Frequency Allocations and Radio Treaty Matters; General Rules and Regulations"
[2] IEEE Std. P1528-2003, "Recommended Practice for Determining the Peak Spatial-Average Specific Absorption Rate (SAR) in the Human Head from Wireless Communications Devices: Measurement Techniques", April 21,2003.
[3] Supplement C (Edition 01-01) to OET Bulletin 65 (Edition 97-01), "Additional Information for Evaluating Compliance of Mobile and Portable Devices with FCC Limits for Human Exposure to RF Emissions", June 2001
[4] IEEE Std. C95.3-2002, "IEEE Recommended Practice for the Meaurement of Potentially Hazardous Electromagnetic Fields-RF and Microwave", 2002
[5] IEEE Std. C95.1-1999, "IEEE Standard for Safety Levels with Respect to Human Exposure to Radio Frequency Electromagnetic Fields, 3 kHz to 300 GHz", 1999
[6] Robert J. Renka, "Multivariate Interpolation Of Large Sets Of Scattered Data", University of Noth Texas ACM Transactions on Mathematical Software, vol. 14, no. 2, June 1988, pp. 139-148
[7] DAYS4 System Handbook

Appendix A - System Performance Check Data

Test Laboratory: Sporton International Inc. SAR Testing Lab Date/Time: 4/14/2005 1:40:51 PM

System Check_Body_2450MHz_20050414

DUT: Dipole 2450 MHz; Type: D2450V2; Serial: D2450V2 - SN:736

Communication System: CW; Frequency: 2450 MHz;Duty Cycle: 1:1
Medium: MSL_2450 Medium parameters used: f = 2450 MHz; σ = 2 mho/m; ε_r = 51.5; ρ = 1000 kg/m^3
Ambient Temperature：21.0 ℃; Liquid Temperature：21.4 ℃

DASY4 Configuration:
- Probe: ET3DV6 - SN1788; ConvF(4.26, 4.26, 4.26); Calibrated: 9/30/2004
- Sensor-Surface: 4mm (Mechanical And Optical Surface Detection)Sensor-Surface: 4mm (Mechanical Surface Detection)
- Electronics: DAE3 Sn577; Calibrated: 11/17/2004
- Phantom: SAM 12; Type: QD 000 P40 C; Serial: TP-1150
- Measurement SW: DASY4, V4.5 Build 19; Postprocessing SW: SEMCAD, V1.8 Build 145

Pin=100mW/Area Scan (91x91x1): Measurement grid: dx=10mm, dy=10mm
Maximum value of SAR (interpolated) = 6.57 mW/g

Pin=100mW/Zoom Scan (7x7x7)/Cube 0: Measurement grid: dx=5mm, dy=5mm, dz=5mm
Reference Value = 58.8 V/m; Power Drift = -0.021 dB
Peak SAR (extrapolated) = 12.1 W/kg
SAR(1 g) = 5.44 mW/g; SAR(10 g) = 2.5 mW/g
Maximum value of SAR (measured) = 6.12 mW/g

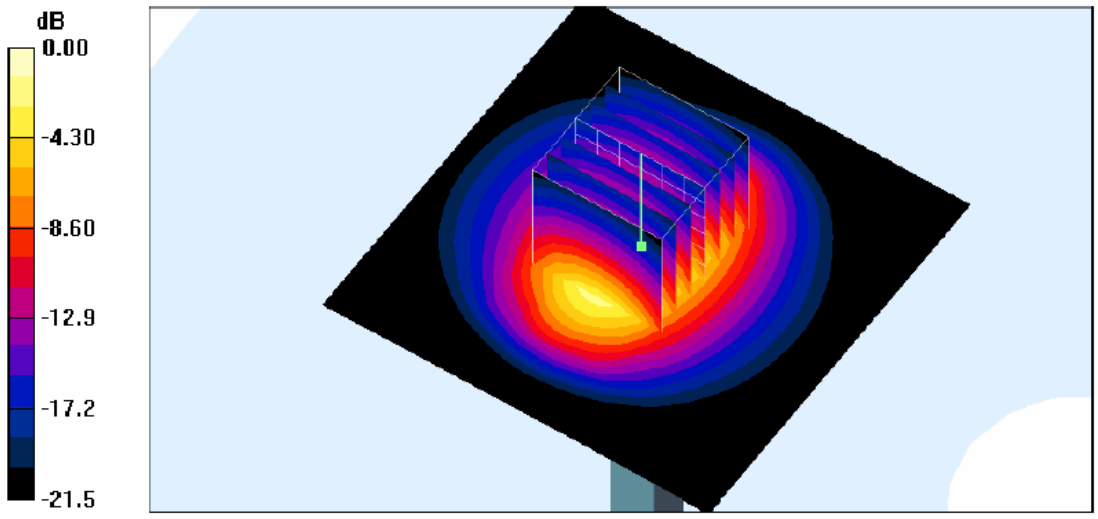

0 dB = 6.12mW/g

©2004 SPORTON International Inc..SAR Testing Lab
This report shall not be reproduced except in full, without the written approval of Sporton. Rev.01

Appendix B - SAR Measurement Data

Test Laboratory: Sporton International Inc. SAR Testing Lab Date/Time: 4/14/2005 2:37:30 PM

Body_802.11b Ch6_EUT Keypad Up_20050414

DUT: 533150; Type: MP3 AIREO20G

Communication System: 802.11b ; Frequency: 2437 MHz;Duty Cycle: 1:1
Medium: MSL_2450 Medium parameters used: f = 2437 MHz; σ = 1.98 mho/m; ε_r = 51.6; ρ = 1000 kg/m^3
Ambient Temperature：22.7 ℃; Liquid Temperature：22.4 ℃

DASY4 Configuration:
- Probe: ET3DV6 - SN1788; ConvF(4.26, 4.26, 4.26); Calibrated: 9/30/2004
- Sensor-Surface: 4mm (Mechanical And Optical Surface Detection)
- Electronics: DAE3 Sn577; Calibrated: 11/17/2004
- Phantom: SAM 12; Type: QD 000 P40 C; Serial: TP-1150
- Measurement SW: DASY4, V4.5 Build 19; Postprocessing SW: SEMCAD, V1.8 Build 145

Ch6/Area Scan (51x81x1): Measurement grid: dx=15mm, dy=15mm
Maximum value of SAR (interpolated) = 0.00 mW/g

Ch6/Zoom Scan (5x5x7)/Cube 0: Measurement grid: dx=8mm, dy=8mm, dz=5mm
Reference Value = 0.593 V/m; Power Drift = -11.1 dB
Peak SAR (extrapolated) = 0.00 W/kg
SAR(1 g) = 3.29e-005 mW/g; SAR(10 g) = 4.74e-006 mW/g
Maximum value of SAR (measured) = 0.00 mW/g

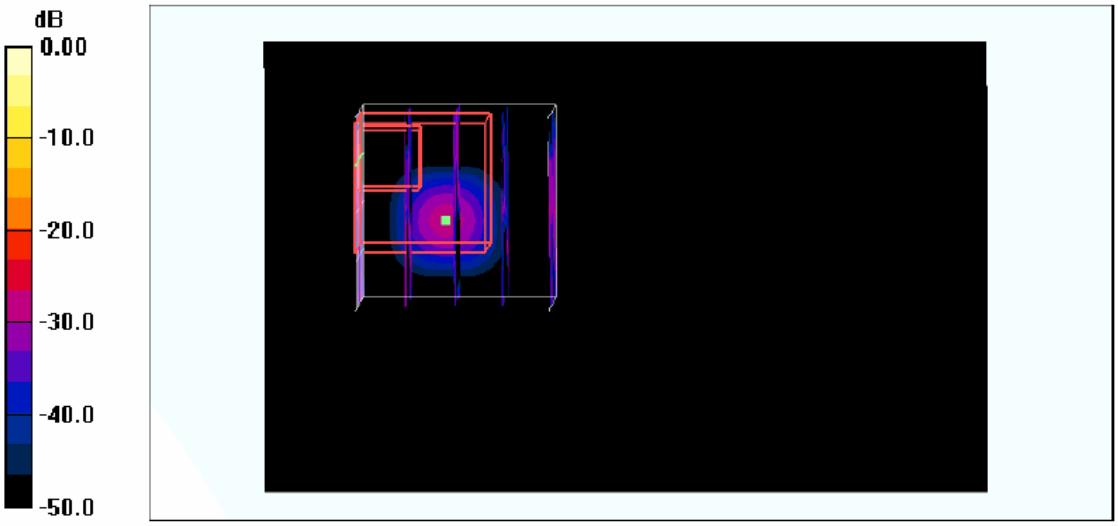

0 dB = 0.00mW/g

©2004 SPORTON International Inc..SAR Testing Lab
This report shall not be reproduced except in full, without the written approval of Sporton. Rev.01

Test Laboratory: Sporton International Inc. SAR Testing Lab Date/Time: 4/14/2005 2:20:08 PM

Body_802.11b Ch6_EUT Keypad Down_20050414

DUT: 533150; Type: MP3 AIREO20G

Communication System: 802.11b ; Frequency: 2437 MHz;Duty Cycle: 1:1
Medium: MSL_2450 Medium parameters used: f = 2437 MHz; σ = 1.98 mho/m; ε_r = 51.6; ρ = 1000 kg/m^3
Ambient Temperature：21.6 ℃; Liquid Temperature：21.8 ℃

DASY4 Configuration:
- Probe: ET3DV6 - SN1788; ConvF(4.26, 4.26, 4.26); Calibrated: 9/30/2004
- Sensor-Surface: 4mm (Mechanical And Optical Surface Detection)
- Electronics: DAE3 Sn577; Calibrated: 11/17/2004
- Phantom: SAM 12; Type: QD 000 P40 C; Serial: TP-1150
- Measurement SW: DASY4, V4.5 Build 19; Postprocessing SW: SEMCAD, V1.8 Build 145

Ch6/Area Scan (51x81x1): Measurement grid: dx=15mm, dy=15mm
Maximum value of SAR (interpolated) = 0.00 mW/g

Ch6/Zoom Scan (5x5x7)/Cube 0: Measurement grid: dx=8mm, dy=8mm, dz=5mm
Reference Value = 0.996 V/m; Power Drift = -1.70 dB
Peak SAR (extrapolated) = 0.00 W/kg
SAR(1 g) = 3.75e-005 mW/g; SAR(10 g) = 8.6e-006 mW/g
Maximum value of SAR (measured) = 0.00 mW/g

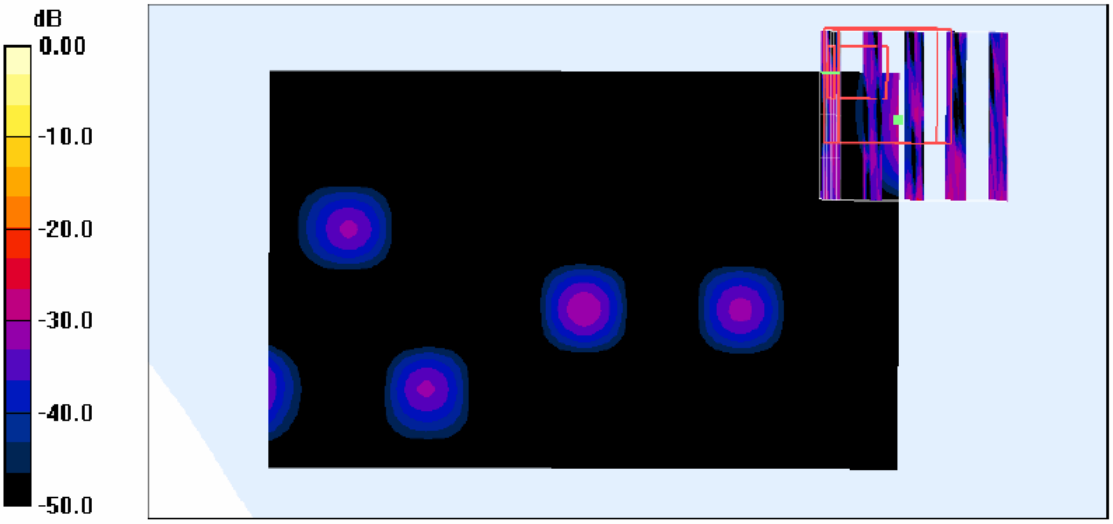

0 dB = 0.00mW/g

©2004 SPORTON International Inc..SAR Testing Lab
This report shall not be reproduced except in full, without the written approval of Sporton. Rev.01

Test Laboratory: Sporton International Inc. SAR Testing Lab Date/Time: 4/14/2005 2:37:30 PM

Body_802.11b Ch6_EUT Keypad Up_20050414

DUT: 533150; Type: MP3 AIREO20G

Communication System: 802.11b ; Frequency: 2437 MHz;Duty Cycle: 1:1
Medium: MSL_2450 Medium parameters used: f = 2437 MHz; σ = 1.98 mho/m; ε_r = 51.6; ρ = 1000 kg/m^3
Ambient Temperature：22.7 ℃; Liquid Temperature：22.4 ℃

DASY4 Configuration:
- Probe: ET3DV6 - SN1788; ConvF(4.26, 4.26, 4.26); Calibrated: 9/30/2004
- Sensor-Surface: 4mm (Mechanical And Optical Surface Detection)
- Electronics: DAE3 Sn577; Calibrated: 11/17/2004
- Phantom: SAM 12; Type: QD 000 P40 C; Serial: TP-1150
- Measurement SW: DASY4, V4.5 Build 19; Postprocessing SW: SEMCAD, V1.8 Build 146

Ch6/Area Scan (51x81x1): Measurement grid: dx=15mm, dy=15mm
Maximum value of SAR (interpolated) = 0.00 mW/g

Ch6/Zoom Scan (5x5x7)/Cube 0: Measurement grid: dx=8mm, dy=8mm, dz=5mm
Reference Value = 0.593 V/m; Power Drift = -11.1 dB
Peak SAR (extrapolated) = 0.00 W/kg
SAR(1 g) = 3.29e-005 mW/g; SAR(10 g) = 4.74e-006 mW/g
Maximum value of SAR (measured) = 0.00 mW/g

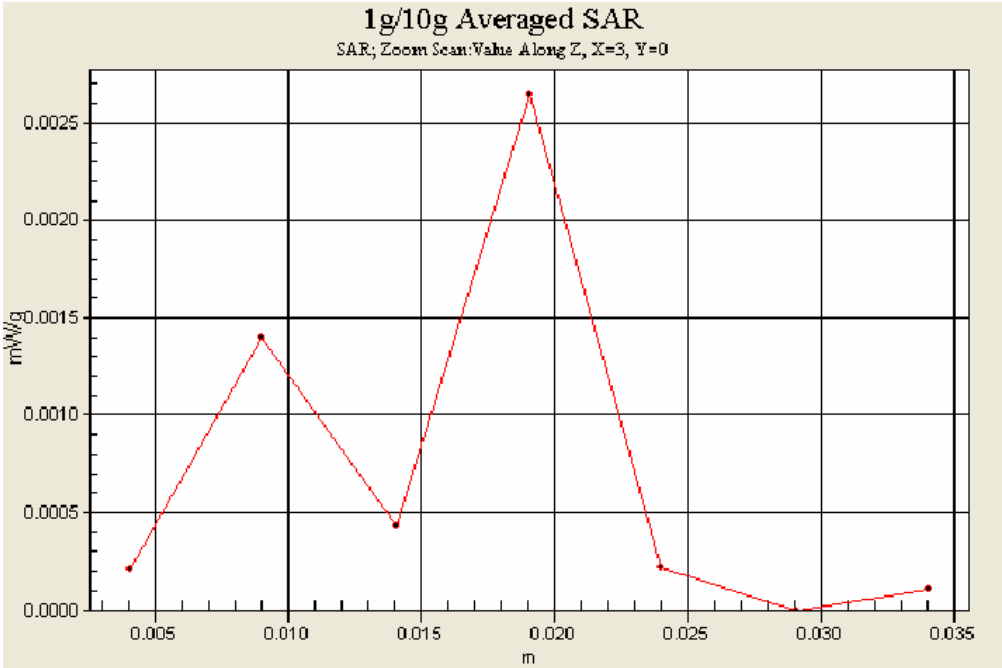

©2004 SPORTON International Inc..SAR Testing Lab
This report shall not be reproduced except in full, without the written approval of Sporton. Rev.01

Test Laboratory: Sporton International Inc. SAR Testing Lab Date/Time: 4/14/2005 2:20:08 PM

Body_802.11b Ch6_EUT Keypad Down_20050414

DUT: 533150; Type: MP3 AIREO20G

Communication System: 802.11b ; Frequency: 2437 MHz;Duty Cycle: 1:1
Medium: MSL_2450 Medium parameters used: f = 2437 MHz; σ = 1.98 mho/m; ε_r = 51.6; ρ = 1000 kg/m^3
Ambient Temperature：21.6 ℃; Liquid Temperature：21.8 ℃

DASY4 Configuration:
- Probe: ET3DV6 - SN1788; ConvF(4.26, 4.26, 4.26); Calibrated: 9/30/2004
- Sensor-Surface: 4mm (Mechanical And Optical Surface Detection)
- Electronics: DAE3 Sn577; Calibrated: 11/17/2004
- Phantom: SAM 12; Type: QD 000 P40 C; Serial: TP-1150
- Measurement SW: DASY4, V4.5 Build 19; Postprocessing SW: SEMCAD, V1.8 Build 146

Ch6/Area Scan (51x81x1): Measurement grid: dx=15mm, dy=15mm
Maximum value of SAR (interpolated) = 0.00 mW/g

Ch6/Zoom Scan (5x5x7)/Cube 0: Measurement grid: dx=8mm, dy=8mm, dz=5mm
Reference Value = 0.996 V/m; Power Drift = -1.70 dB
Peak SAR (extrapolated) = 0.00 W/kg
SAR(1 g) = 3.75e-005 mW/g; SAR(10 g) = 8.6e-006 mW/g
Maximum value of SAR (measured) = 0.00 mW/g

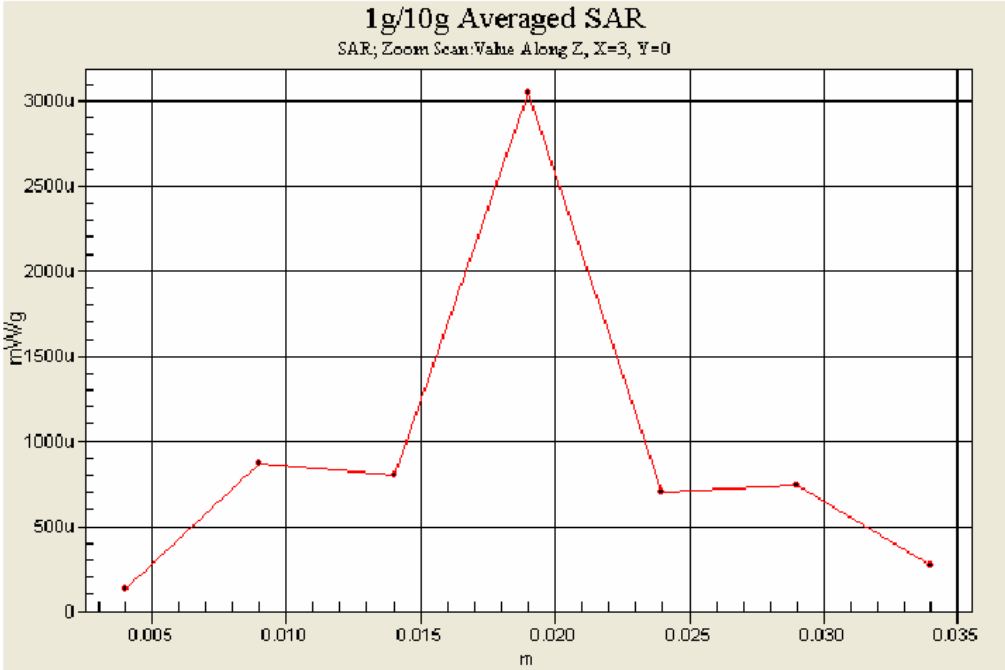

©2004 SPORTON International Inc..SAR Testing Lab
This report shall not be reproduced except in full, without the written approval of Sporton. Rev.01

Appendix C – Calibration Data

Calibration Laboratory of
Schmid & Partner
Engineering AG
Zeughausstrasse 43, 8004 Zurich, Switzerland

Client Auden > Sporton Int. Inc.

CALIBRATION CERTIFICATE

Object(s)	D2450V2 - SN:736
Calibration procedure(s)	QA CAL-05.v2 Calibration procedure for dipole validation kits
Calibration date:	August 27, 2003
Condition of the calibrated item	In Tolerance (according to the specific calibration document)

This calibration statement documents traceability of M&TE used in the calibration procedures and conformity of the procedures with the ISO/IEC 17025 international standard.

All calibrations have been conducted in the closed laboratory facility: environment temperature 22 +/- 2 degrees Celsius and humidity < 75%.

Calibration Equipment used (M&TE critical for calibration)

Model Type	ID #	Cal Date (Calibrated by, Certificate No.)	Scheduled Calibration
RF generator R&S SML-03	100698	27-Mar-2002 (R&S, No. 20-92389)	In house check: Mar-05
Power sensor HP 8481A	MY41092317	18-Oct-02 (Agilent, No. 20021018)	Oct-04
Power sensor HP 8481A	US37292783	30-Oct-02 (METAS, No. 252-0236)	Oct-03
Power meter EPM E442	GB37480704	30-Oct-02 (METAS, No. 252-0236)	Oct-03
Network Analyzer HP 8753E	US37390585	18-Oct-01 (Agilent, No. 24BR1033101)	In house check: Oct 03

	Name	Function	Signature
Calibrated by:	Jodth Mueller	Technician	
Approved by:	Katja Pokovic	Laboratory Director	

Date issued: August 28, 2003

This calibration certificate is issued as an intermediate solution until the accreditation process (based on ISO/IEC 17025 International Standard) for Calibration Laboratory of Schmid & Partner Engineering AG is completed.

880-KP0301061-A Page 1 (1)

©2004 SPORTON International Inc..SAR Testing Lab
This report shall not be reproduced except in full, without the written approval of Sporton. Rev.01

Schmid & Partner Engineering AG

s p e a g

Zeughausstrasse 43, 8004 Zurich, Switzerland
Phone +41 1 245 9700, Fax +41 1 245 9779
info@speag.com, http://www.speag.com

DASY

Dipole Validation Kit

Type: D2450V2

Serial: 736

Manufactured: August 26, 2003
Calibrated: August 27, 2003

©2004 SPORTON International Inc..SAR Testing Lab
This report shall not be reproduced except in full, without the written approval of Sporton. Rev.01

1. Measurement Conditions

The measurements were performed in the flat section of the SAM twin phantom filled with **head simulating solution** of the following electrical parameters at 2450 MHz:

Relative Dielectricity	**38.2**	± 5%
Conductivity	**1.89 mho/m**	± 5%

The DASY4 System with a dosimetric E-field probe ES3DV2 (SN:3013, Conversion factor 4.8 at 2450 MHz) was used for the measurements.

The dipole was mounted on the small tripod so that the dipole feedpoint was positioned below the center marking of the flat phantom section and the dipole was oriented parallel to the body axis (the long side of the phantom). The standard measuring distance was 10mm from dipole center to the solution surface. Lossless spacer was used during measurements for accurate distance positioning.

The coarse grid with a grid spacing of 15mm was aligned with the dipole. The 7x7x7 fine cube was chosen for cube integration.
The dipole input power (forward power) was 250mW ± 3 %. The results are normalized to 1W input power.

2. SAR Measurement with DASY4 System

Standard SAR-measurements were performed according to the measurement conditions described in section 1. The results (see figure supplied) have been normalized to a dipole input power of 1W (forward power). The resulting averaged SAR-values measured with the dosimetric probe ES3DV2 SN:3013 and applying the advanced extrapolation are:

averaged over 1 cm^3 (1 g) of tissue:	**55.6 mW/g** ± 16.8 % (k=2)[1]
averaged over 10 cm^3 (10 g) of tissue:	**25.0 mW/g** ± 16.2 % (k=2)[1]

[1] validation uncertainty

©2004 SPORTON International Inc..SAR Testing Lab
This report shall not be reproduced except in full, without the written approval of Sporton. Rev.01

3. Dipole Impedance and Return Loss

The impedance was measured at the SMA-connector with a network analyzer and numerically transformed to the dipole feedpoint. The transformation parameters from the SMA-connector to the dipole feedpoint are:

Electrical delay:	**1.158 ns**	(one direction)
Transmission factor:	**0.983**	(voltage transmission, one direction)

The dipole was positioned at the flat phantom sections according to section 1 and the distance spacer was in place during impedance measurements.

Feedpoint impedance at 2450 MHz:	Re{Z} = **52.5 Ω**
	Im {Z} = **3.6 Ω**
Return Loss at 2450 MHz	**-27.5 dB**

4. Measurement Conditions

The measurements were performed in the flat section of the SAM twin phantom filled with **body simulating solution** of the following electrical parameters at 2450 MHz:

Relative Dielectricity	**50.8**	± 5%
Conductivity	**2.03 mho/m**	± 5%

The DASY4 System with a dosimetric E-field probe ES3DV2 (SN:3013, Conversion factor 4.2 at 2450 MHz) was used for the measurements.

The dipole was mounted on the small tripod so that the dipole feedpoint was positioned below the center marking of the flat phantom section and the dipole was oriented parallel to the body axis (the long side of the phantom). The standard measuring distance was 10mm from dipole center to the solution surface. Lossless spacer was used during measurements for accurate distance positioning.

The coarse grid with a grid spacing of 15mm was aligned with the dipole. The 7x7x7 fine cube was chosen for cube integration.
The dipole input power (forward power) was 250mW ± 3 %. The results are normalized to 1W input power.

©2004 SPORTON International Inc..SAR Testing Lab
This report shall not be reproduced except in full, without the written approval of Sporton. Rev.01

5. SAR Measurement with DASY4 System

Standard SAR-measurements were performed according to the measurement conditions described in section 4. The results (see figure supplied) have been normalized to a dipole input power of 1W (forward power). The resulting averaged SAR-values measured with the dosimetric probe ES3DV2 SN:3013 and applying the advanced extrapolation are:

averaged over 1 cm^3 (1 g) of tissue:	**56.0 mW/g** ± 16.8 % (k=2)[2]
averaged over 10 cm^3 (10 g) of tissue:	**25.8 mW/g** ± 16.2 % (k=2)[2]

6. Dipole Impedance and Return Loss

The dipole was positioned at the flat phantom sections according to section 4 and the distance spacer was in place during impedance measurements.

Feedpoint impedance at 2450 MHz:	Re{Z} = **48.7 Ω**
	Im {Z} = **4.8 Ω**
Return Loss at 2450 MHz	**-25.8 dB**

7. Handling

Do not apply excessive force to the dipole arms, because they might bend. Bending of the dipole arms stresses the soldered connections near the feedpoint leading to a damage of the dipole.

8. Design

The dipole is made of standard semirigid coaxial cable. The center conductor of the feeding line is directly connected to the second arm of the dipole. The antenna is therefore short-circuited for DC-signals.

Small end caps have been added to the dipole arms in order to improve matching when loaded according to the position as explained in Sections 1and 4. The SAR data are not affected by this change. The overall dipole length is still according to the Standard.

9. Power Test

After long term use with 40W radiated power, only a slight warming of the dipole near the feedpoint can be measured.

[2] validation uncertainty

©2004 SPORTON International Inc..SAR Testing Lab
This report shall not be reproduced except in full, without the written approval of Sporton. Rev.01

Page 1 of 1

Date/Time: 08/27/03 15:43:04

Test Laboratory: SPEAG, Zurich, Switzerland
File Name: SN736_SN3013_M2450_270803.da4

DUT: Dipole 2450 MHz; Type: D2450V2; Serial: D2450V2 - SN736
Program: Dipole Calibration

Communication System: CW-2450; Frequency: 2450 MHz;Duty Cycle: 1:1
Medium: Muscle 2450 MHz (σ = 2.03 mho/m, ε_r = 50.75, ρ = 1000 kg/m^3)
Phantom section: Flat Section
Measurement Standard: DASY4 (High Precision Assessment)

DASY4 Configuration:

- Probe: ES3DV2 - SN3013; ConvF(4.2, 4.2, 4.2); Calibrated: 1/19/2003
- Sensor-Surface: 4mm (Mechanical Surface Detection)
- Electronics: DAE3 - SN411; Calibrated: 1/16/2003
- Phantom: SAM with CRP - TP1006; Type: SAM 4.0; Serial: TP:1006
- Measurement SW: DASY4, V4.1 Build 47; Postprocessing SW: SEMCAD, V1.6 Build 115

Pin = 250 mW; d = 10 mm/Area Scan (81x81x1): Measurement grid: dx=15mm, dy=15mm
Reference Value = 91 V/m
Power Drift = -0.02 dB
Maximum value of SAR = 15.7 mW/g

Pin = 250 mW; d = 10 mm/Zoom Scan (7x7x7)/Cube 0: Measurement grid: dx=5mm, dy=5mm, dz=5mm
Peak SAR (extrapolated) = 27.8 W/kg
SAR(1 g) = 14 mW/g; SAR(10 g) = 6.46 mW/g
Reference Value = 91 V/m
Power Drift = -0.02 dB
Maximum value of SAR = 16 mW/g

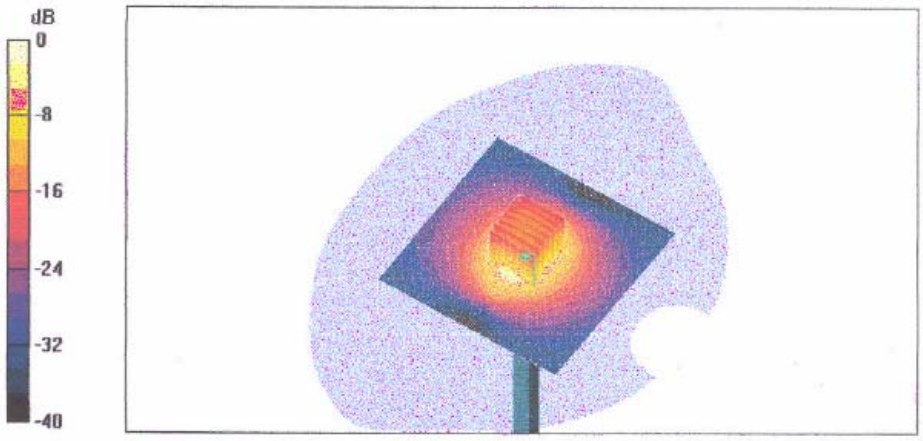

0 dB = 16mW/g

©2004 SPORTON International Inc..SAR Testing Lab
This report shall not be reproduced except in full, without the written approval of Sporton. Rev.01

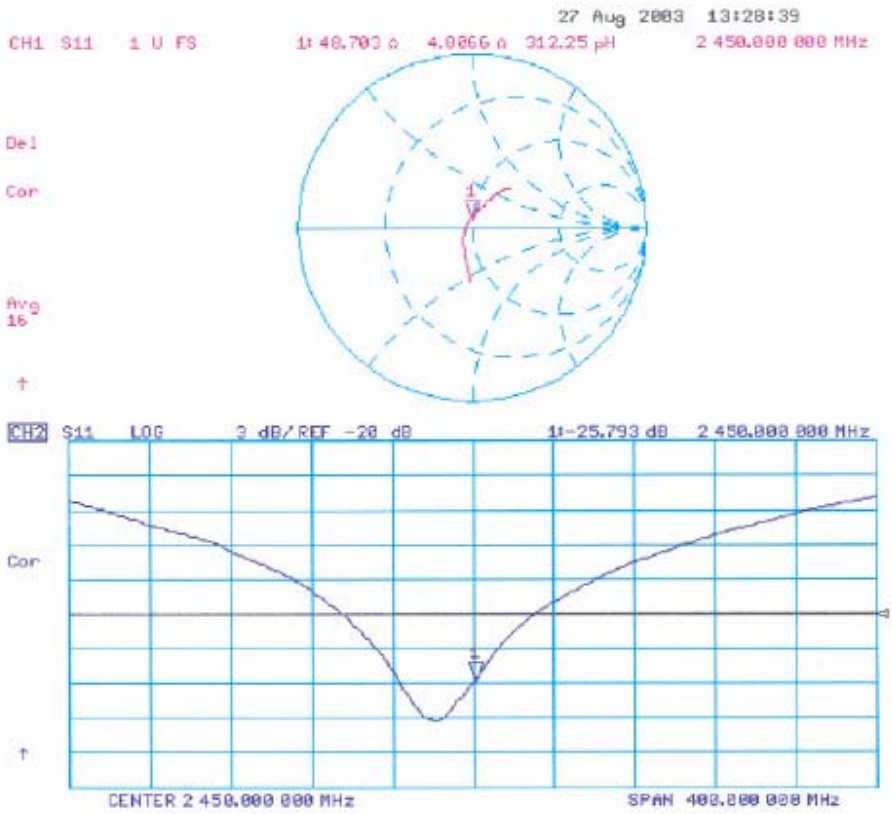

©2004 SPORTON International Inc..SAR Testing Lab
This report shall not be reproduced except in full, without the written approval of Sporton. **Rev.01**

Page 1 of 1
Date/Time: 08/27/03 11:42:12

Test Laboratory: SPEAG, Zurich, Switzerland
File Name: SN736_SN3013_HSL2450_270803.da4

DUT: Dipole 2450 MHz; Type: D2450V2; Serial: D2450V2 - SN736
Program: Dipole Calibration

Communication System: CW-2450; Frequency: 2450 MHz;Duty Cycle: 1:1
Medium: HSL 2450 MHz (σ = 1.89 mho/m, ε_r = 38.19, ρ = 1000 kg/m^3)
Phantom section: Flat Section
Measurement Standard: DASY4 (High Precision Assessment)

DASY4 Configuration:

- Probe: ES3DV2 - SN3013; ConvF(4.8, 4.8, 4.8); Calibrated: 1/19/2003
- Sensor-Surface: 4mm (Mechanical Surface Detection)
- Electronics: DAE3 - SN411; Calibrated: 1/16/2003
- Phantom: SAM with CRP - TP1006; Type: SAM 4.0; Serial: TP:1006
- Measurement SW: DASY4, V4.1 Build 47; Postprocessing SW: SEMCAD, V1.6 Build 115

Pin = 250 mW; d = 10 mm/Area Scan (81x81x1): *Measurement grid: dx=15mm, dy=15mm*
Reference Value = 91.5 V/m
Power Drift = -0.04 dB
Maximum value of SAR = 15.3 mW/g

Pin = 250 mW; d = 10 mm/Zoom Scan (7x7x7)/Cube 0: Measurement grid: dx=5mm, dy=5mm, dz=5mm
Peak SAR (extrapolated) = 30.2 W/kg
SAR(1 g) = 13.9 mW/g; SAR(10 g) = 6.25 mW/g
Reference Value = 91.5 V/m
Power Drift = -0.04 dB
Maximum value of SAR = 15.5 mW/g

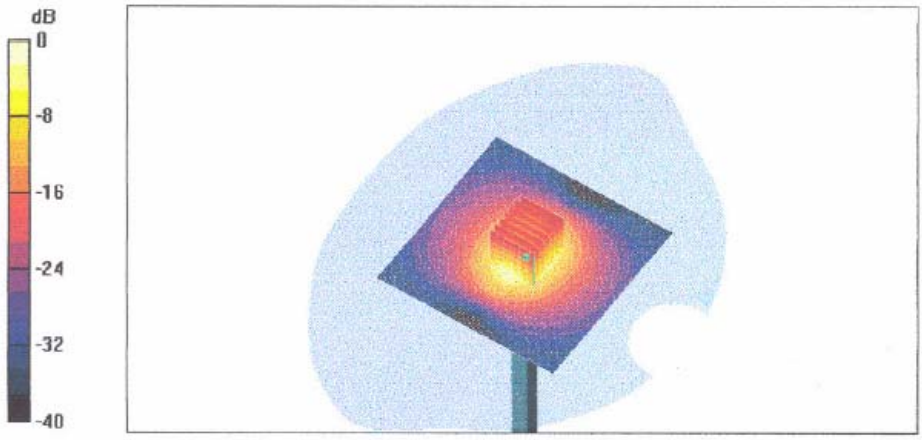

0 dB = 15.5mW/g

©2004 SPORTON International Inc..SAR Testing Lab
This report shall not be reproduced except in full, without the written approval of Sporton. Rev.01

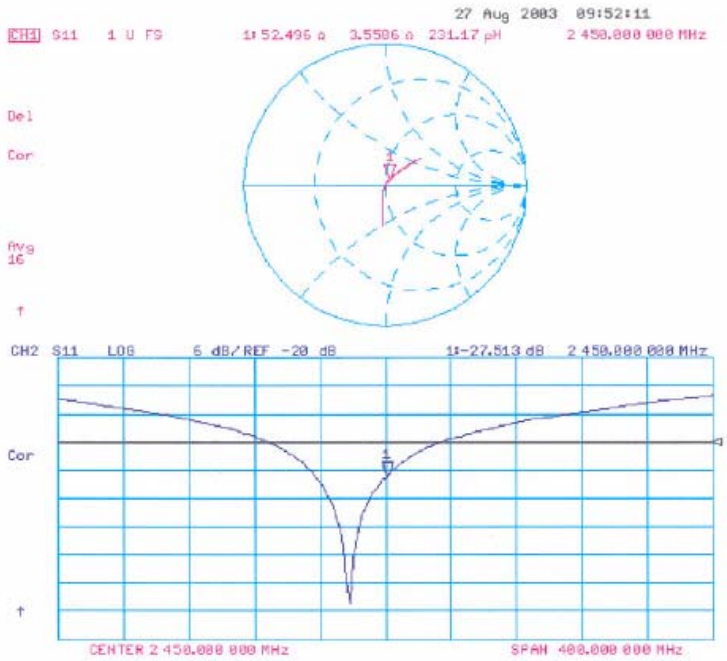

©2004 SPORTON International Inc..SAR Testing Lab
This report shall not be reproduced except in full, without the written approval of Sporton. **Rev.01**

Calibration Laboratory of
Schmid & Partner
Engineering AG
Zeughausstrasse 43, 8004 Zurich, Switzerland

S Schweizerischer Kalibrierdienst
C Service suisse d'étalonnage
S Servizio svizzero di taratura
S Swiss Calibration Service

Accredited by the Swiss Federal Office of Metrology and Accreditation
The Swiss Accreditation Service is one of the signatories to the EA Multilateral Agreement for the recognition of calibration certificates

Accreditation No.: SCS 108

Client Sporton (Auden)

Certificate No: ET3-1788_Sep04

CALIBRATION CERTIFICATE

Object	ET3DV6 - SN:1788
Calibration procedure(s)	QA CAL-01.v5 Calibration procedure for dosimetric E-field probes
Calibration date:	September 30, 2004
Condition of the calibrated item	In Tolerance

This calibration certificate documents the traceability to national standards, which realize the physical units of measurements (SI). The measurements and the uncertainties with confidence probability are given on the following pages and are part of the certificate.

All calibrations have been conducted in the closed laboratory facility: environment temperature (22 ± 3)°C and humidity < 70%.

Calibration Equipment used (M&TE critical for calibration)

Primary Standards	ID #	Cal Date (Calibrated by, Certificate No.)	Scheduled Calibration
Power meter E4419B	GB41293874	5-May-04 (METAS, No. 251-00388)	May-05
Power sensor E4412A	MY41495277	5-May-04 (METAS, No. 251-00388)	May-05
Reference 3 dB Attenuator	SN: S5054 (3c)	3-Apr-03 (METAS, No. 251-00403)	Aug-05
Reference 20 dB Attenuator	SN: S5086 (20b)	3-May-04 (METAS, No. 251-00389)	May-05
Reference 30 dB Attenuator	SN: S5129 (30b)	3-Apr-03 (METAS, No. 251-00404)	Aug-05
Reference Probe ES3DV2	SN:3013	8-Jan-04 (SPEAG, No. ES3-3013_Jan04)	Jan-05
DAE4	SN: 617	26-May-04 (SPEAG, No. DAE4-617_May04)	May-05

Secondary Standards	ID #	Check Date (in house)	Scheduled Check
Power sensor HP 8481A	MY41092180	18-Sep-02 (SPEAG, in house check Oct-03)	In house check: Oct 05
RF generator HP 8648C	US3642U01700	4-Aug-99 (SPEAG, in house check Dec-03)	In house check: Dec-05
Network Analyzer HP 8753E	US37390585	18-Oct-01 (SPEAG, in house check Nov-03)	In house check: Nov 04

	Name	Function	Signature
Calibrated by:	Nico Vetterli	Laboratory Technician	N. Vetterli
Approved by:	Katja Pokovic	Technical Manager	

Issued: October 1, 2004

This calibration certificate shall not be reproduced except in full without written approval of the laboratory.

©2004 SPORTON International Inc..SAR Testing Lab
This report shall not be reproduced except in full, without the written approval of Sporton. Rev.01

Calibration Laboratory of
Schmid & Partner
Engineering AG
Zeughausstrasse 43, 8004 Zurich, Switzerland

S Schweizerischer Kalibrierdienst
C Service suisse d'étalonnage
Servizio svizzero di taratura
S Swiss Calibration Service

Accredited by the Swiss Federal Office of Metrology and Accreditation
The Swiss Accreditation Service is one of the signatories to the EA Multilateral Agreement for the recognition of calibration certificates

Accreditation No.: **SCS 108**

Glossary:

TSL	tissue simulating liquid
NORMx,y,z	sensitivity in free space
ConF	sensitivity in TSL / NORMx,y,z
DCP	diode compression point
Polarization φ	φ rotation around probe axis
Polarization ϑ	ϑ rotation around an axis that is in the plane normal to probe axis (at measurement center), i.e., ϑ = 0 is normal to probe axis

Calibration is Performed According to the Following Standards:

a) IEEE Std 1528-2003, "IEEE Recommended Practice for Determining the Peak Spatial-Averaged Specific Absorption Rate (SAR) in the Human Head from Wireless Communications Devices: Measurement Techniques", December 2003
b) CENELEC EN 50361, "Basic standard for the measurement of Specific Absorption Rate related to human exposure to electromagnetic fields from mobile phones (300 MHz - 3 GHz), July 2001

Methods Applied and Interpretation of Parameters:

- *NORMx,y,z:* Assessed for E-field polarization ϑ = 0 (f ≤ 900 MHz in TEM-cell; f > 1800 MHz: R22 waveguide). NORMx,y,z are only intermediate values, i.e., the uncertainties of NORMx,y,z does not effect the E^2-field uncertainty inside TSL (see below *ConvF*).
- *NORM(f)x,y,z = NORMx,y,z * frequency_response* (see Frequency Response Chart). This linearization is implemented in DASY4 software versions later than 4.2. The uncertainty of the frequency response is included in the stated uncertainty of *ConvF*.
- *DCPx,y,z:* DCP are numerical linearization parameters assessed based on the data of power sweep (no uncertainty required). DCP does not depend on frequency nor media.
- *ConvF and Boundary Effect Parameters:* Assessed in flat phantom using E-field (or Temperature Transfer Standard for f ≤ 800 MHz) and inside waveguide using analytical field distributions based on power measurements for f > 800 MHz. The same setups are used for assessment of the parameters applied for boundary compensation (alpha, depth) of which typical uncertainty values are given. These parameters are used in DASY4 software to improve probe accuracy close to the boundary. The sensitivity in TSL corresponds to *NORMx,y,z * ConvF* whereby the uncertainty corresponds to that given for *ConvF*. A frequency dependent *ConvF* is used in DASY 4.3 B17 and higher which allows extending the validity from ± 50 MHz to ± 100 MHz.
- *Spherical isotropy (3D deviation from isotropy)*: in a field of low gradients realized using a flat phantom exposed by a patch antenna.
- *Sensor Offset*: The sensor offset corresponds to the offset of virtual measurement center from the probe tip (on probe axis). No tolerance required.

©2004 SPORTON International Inc..SAR Testing Lab
This report shall not be reproduced except in full, without the written approval of Sporton. **Rev.01**

ET3DV6 SN:1788 September 30, 2004

Probe ET3DV6

SN:1788

Manufactured:	May 28, 2003
Last calibrated:	August 29, 2003
Recalibrated:	September 30, 2004

Calibrated for DASY Systems

(Note: non-compatible with DASY2 system!)

©2004 SPORTON International Inc..SAR Testing Lab
This report shall not be reproduced except in full, without the written approval of Sporton. Rev.01

ET3DV6 SN:1788 September 30, 2004

DASY - Parameters of Probe: ET3DV6 SN:1788

Sensitivity in Free Space[A]			Diode Compression[B]	
NormX	**1.68** ± 9.9%	$\mu V/(V/m)^2$	DCP X	**94** mV
NormY	**1.70** ± 9.9%	$\mu V/(V/m)^2$	DCP Y	**94** mV
NormZ	**1.74** ± 9.9%	$\mu V/(V/m)^2$	DCP Z	**94** mV

Sensitivity in Tissue Simulating Liquid (Conversion Factors)

Please see Page 8.

Boundary Effect

TSL **900 MHz** **Typical SAR gradient: 5 % per mm**

Sensor Center to Phantom Surface Distance		**3.7 mm**	**4.7 mm**
SAR_{be} [%]	Without Correction Algorithm	8.1	4.4
SAR_{be} [%]	With Correction Algorithm	0.7	0.1

TSL **1810 MHz** **Typical SAR gradient: 10 % per mm**

Sensor Center to Phantom Surface Distance		**3.7 mm**	**4.7 mm**
SAR_{be} [%]	Without Correction Algorithm	12.0	8.2
SAR_{be} [%]	With Correction Algorithm	0.9	0.1

Sensor Offset

Probe Tip to Sensor Center **2.7** mm

The reported uncertainty of measurement is stated as the standard uncertainty of measurement multiplied by the coverage factor k=2, which for a normal distribution corresponds to a coverage probability of approximately 95%.

[A] The uncertainties of NormX,Y,Z do not affect the E^2-field uncertainty inside TSL (see Page 8).

[B] Numerical linearization parameter: uncertainty not required.

©2004 SPORTON International Inc..SAR Testing Lab
This report shall not be reproduced except in full, without the written approval of Sporton. Rev.01

ET3DV6 SN:1788 September 30, 2004

Frequency Response of E-Field

(TEM-Cell:ifi110 EXX, Waveguide: R22)

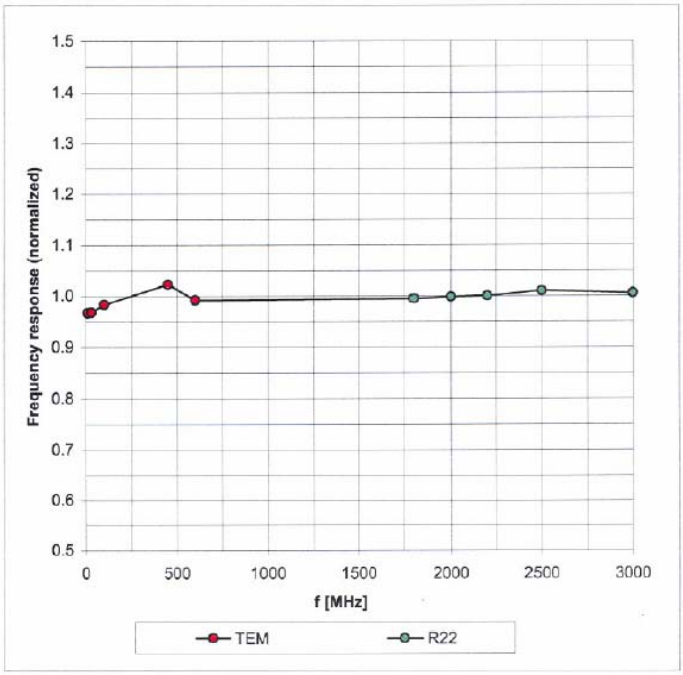

Uncertainty of Frequency Response of E-field: ± 6.3% (k=2)

©2004 SPORTON International Inc..SAR Testing Lab
This report shall not be reproduced except in full, without the written approval of Sporton. Rev.01