20130909_SystemPerformanceCheck-D5GHzV2 SN 1138

Frequency: 5500 MHz; Duty Cycle: 1:1; Room Ambient Temperature: 24.0°C; Liquid Temperature: 23.0°C
Medium parameters used: f = 5500 MHz; σ = 5.753 S/m; ε_r = 48.137; ρ = 1000 kg/m^3
DASY5 Configuration:
- Area Scan Setting: Find Secondary Maximum Within: 2.0 dB and with a peak SAR value greater than 0.0012W/kg
- Averaged Fast SAR: Polynomial fit
- Electronics: DAE4 Sn1259; Calibrated: 2/7/2013
- Probe: EX3DV4 - SN3929; ConvF(3.68, 3.68, 3.68); Calibrated: 6/24/2013;
- Sensor-Surface: 1.4mm (Mechanical Surface Detection (Locations From Previous Scan Used)), Sensor-Surface: 1.4mm (Mechanical Surface Detection)
- Phantom: ELI-A v5.0; Type: QDOVA002AA; Serial: TP 1194

Body/5.5 GHz, Pin=100mW 2/Area Scan (61x61x1): Interpolated grid: dx=1.000 mm, dy=1.000 mm

Reference Value = 52.429 V/m; Power Drift = 0.03 dB
Fast SAR: SAR(1 g) = 8.65 W/kg; SAR(10 g) = 2.36 W/kg
Maximum value of SAR (interpolated) = 23.5 W/kg

Body/5.5 GHz, Pin=100mW 2/Zoom Scan (8x8x7)/Cube 0: Measurement grid: dx=4mm, dy=4mm, dz=1.4mm

Reference Value = 52.429 V/m; Power Drift = 0.03 dB
Peak SAR (extrapolated) = 31.3 W/kg
SAR(1 g) = 7.57 W/kg; SAR(10 g) = 2.14 W/kg
Maximum value of SAR (measured) = 17.9 W/kg

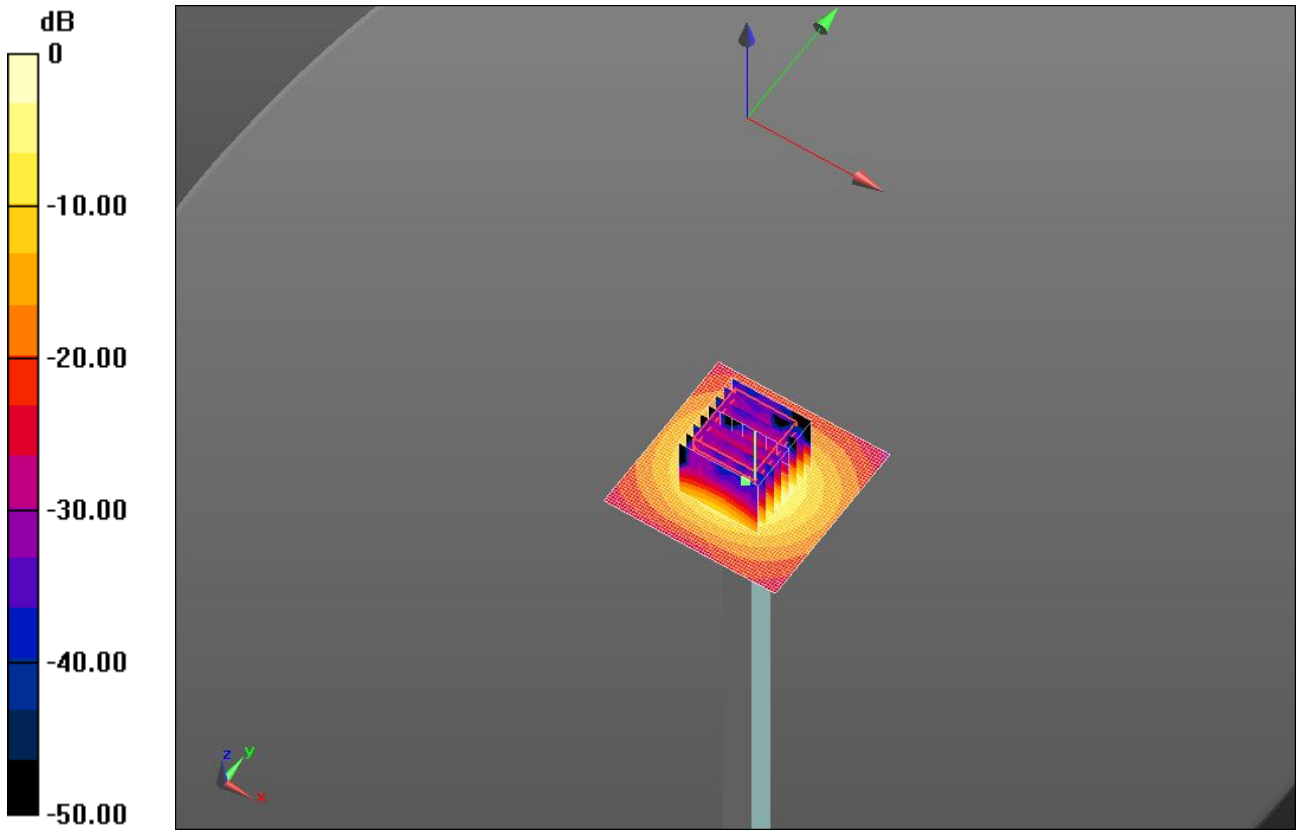

0 dB = 17.9 W/kg = 12.53 dBW/kg

20130909_SystemPerformanceCheck-D5GHzV2 SN 1138

Frequency: 5500 MHz; Duty Cycle: 1:1

Body/5.5 GHz, Pin=100mW 2/Z Scan (1x1x21): Measurement grid: dx=20mm, dy=20mm, dz=5mm
Maximum value of SAR (measured) = 13.6 W/kg

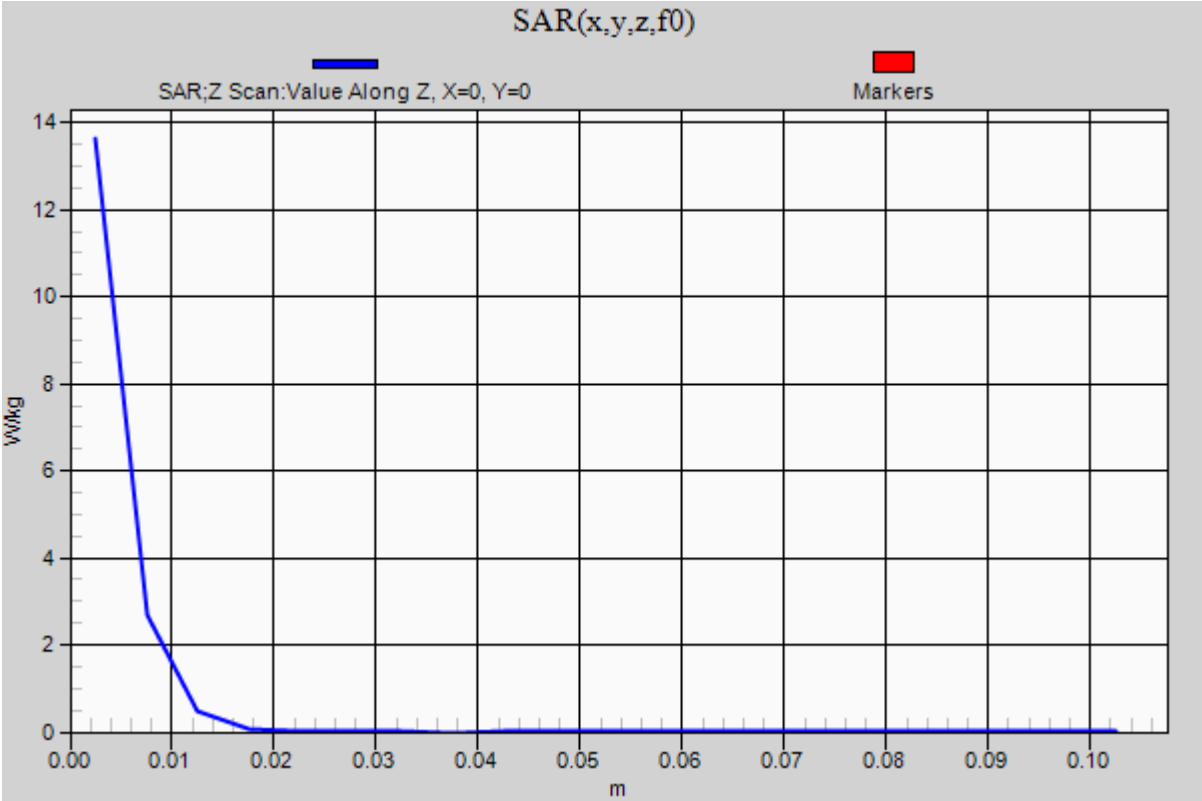

20130911_SystemPerformanceCheck-D2450V2 SN 706

Frequency: 2450 MHz; Duty Cycle: 1:1; Room Ambient Temperature: 24.0°C; Liquid Temperature: 23.0°C
Medium parameters used: f = 2450 MHz; σ = 1.983 S/m; ε_r = 53.189; ρ = 1000 kg/m^3
DASY5 Configuration:
- Area Scan Setting: Find Secondary Maximum Within: 2.0 dB and with a peak SAR value greater than 0.0012W/kg
- Electronics: DAE4 Sn1259; Calibrated: 2/7/2013
- Probe: EX3DV4 - SN3929; ConvF(6.66, 6.66, 6.66); Calibrated: 6/24/2013;
- Sensor-Surface: 2.5mm (Mechanical Surface Detection (Locations From Previous Scan Used)), Sensor-Surface: 2.5mm (Mechanical Surface Detection)
- Phantom: ELI-B v5.0; Type: QDOVA002AA; Serial: TP:1195

Body/Pin=100 mW/Area Scan (71x71x1): Interpolated grid: dx=1.200 mm, dy=1.200 mm

Reference Value = 59.842 V/m; Power Drift = -0.04 dB
Fast SAR: SAR(1 g) = 5.09 W/kg; SAR(10 g) = 2.21 W/kg
Maximum value of SAR (interpolated) = 7.41 W/kg

Body/Pin=100 mW/Zoom Scan (7x7x7)/Cube 0: Measurement grid: dx=5mm, dy=5mm, dz=5mm

Reference Value = 59.842 V/m; Power Drift = -0.04 dB
Peak SAR (extrapolated) = 11.1 W/kg
SAR(1 g) = 5.26 W/kg; SAR(10 g) = 2.42 W/kg
Maximum value of SAR (measured) = 7.51 W/kg

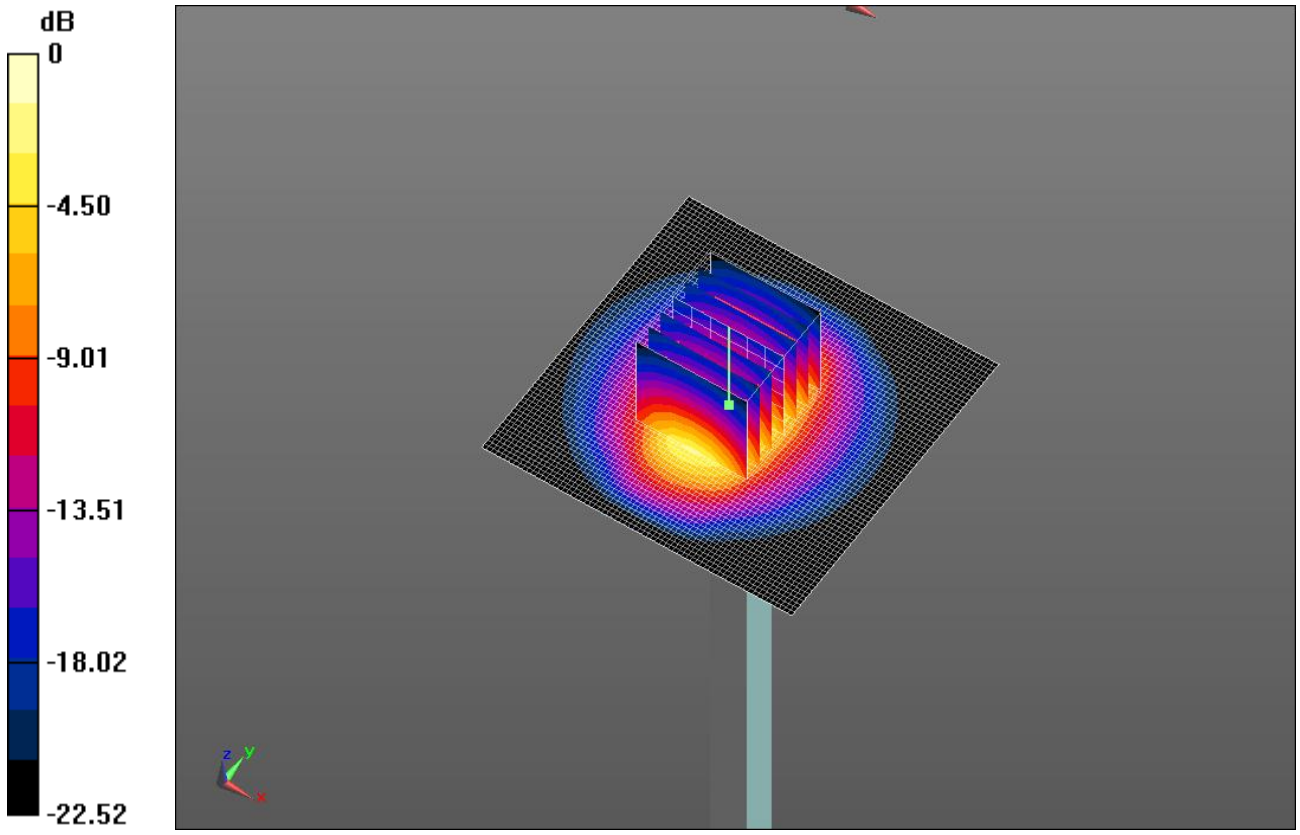

0 dB = 7.51 W/kg = 8.76 dBW/kg

20130911_SystemPerformanceCheck-D2450V2 SN 706

Frequency: 2450 MHz; Duty Cycle: 1:1

Body/Pin=100 mW/Z Scan (1x1x21): Measurement grid: dx=20mm, dy=20mm, dz=5mm
Maximum value of SAR (measured) = 6.93 W/kg

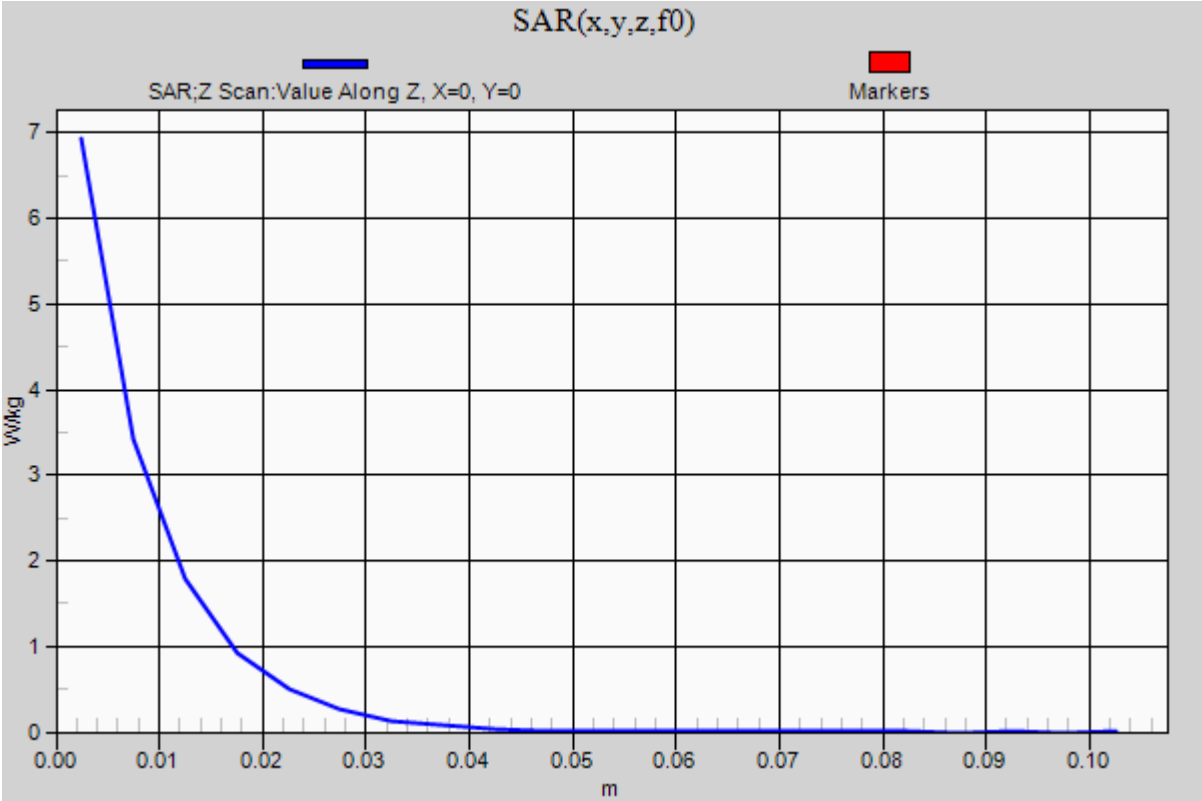

20130917_SystemPerformanceCheck-D5GHzV2 SN 1138

Frequency: 5200 MHz; Duty Cycle: 1:1; Room Ambient Temperature: 24.0°C; Liquid Temperature: 23.0°C
Medium parameters used: f = 5200 MHz; σ = 5.458 S/m; ε_r = 47.809; ρ = 1000 kg/m^3
DASY5 Configuration:
- Area Scan Setting: Find Secondary Maximum Within: 2.0 dB and with a peak SAR value greater than 0.0012W/kg
- Averaged Fast SAR: Polynomial fit
- Electronics: DAE4 Sn1259; Calibrated: 2/7/2013
- Probe: EX3DV4 - SN3929; ConvF(4.28, 4.28, 4.28); Calibrated: 6/24/2013;
- Sensor-Surface: 1.4mm (Mechanical Surface Detection)
- Phantom: ELI-A v5.0; Type: QDOVA002AA; Serial: TP 1194

Body/5.2 GHz, Pin=100mW/Area Scan (61x61x1): Interpolated grid: dx=1.000 mm, dy=1.000 mm

Reference Value = 52.623 V/m; Power Drift = -0.01 dB
Fast SAR: SAR(1 g) = 7.4 W/kg; SAR(10 g) = 2.04 W/kg
Maximum value of SAR (interpolated) = 19.3 W/kg

Body/5.2 GHz, Pin=100mW/Zoom Scan (8x8x7)/Cube 0: Measurement grid: dx=4mm, dy=4mm, dz=1.4mm

Reference Value = 52.623 V/m; Power Drift = -0.01 dB
Peak SAR (extrapolated) = 31.2 W/kg
SAR(1 g) = 7.67 W/kg; SAR(10 g) = 2.17 W/kg
Maximum value of SAR (measured) = 17.9 W/kg

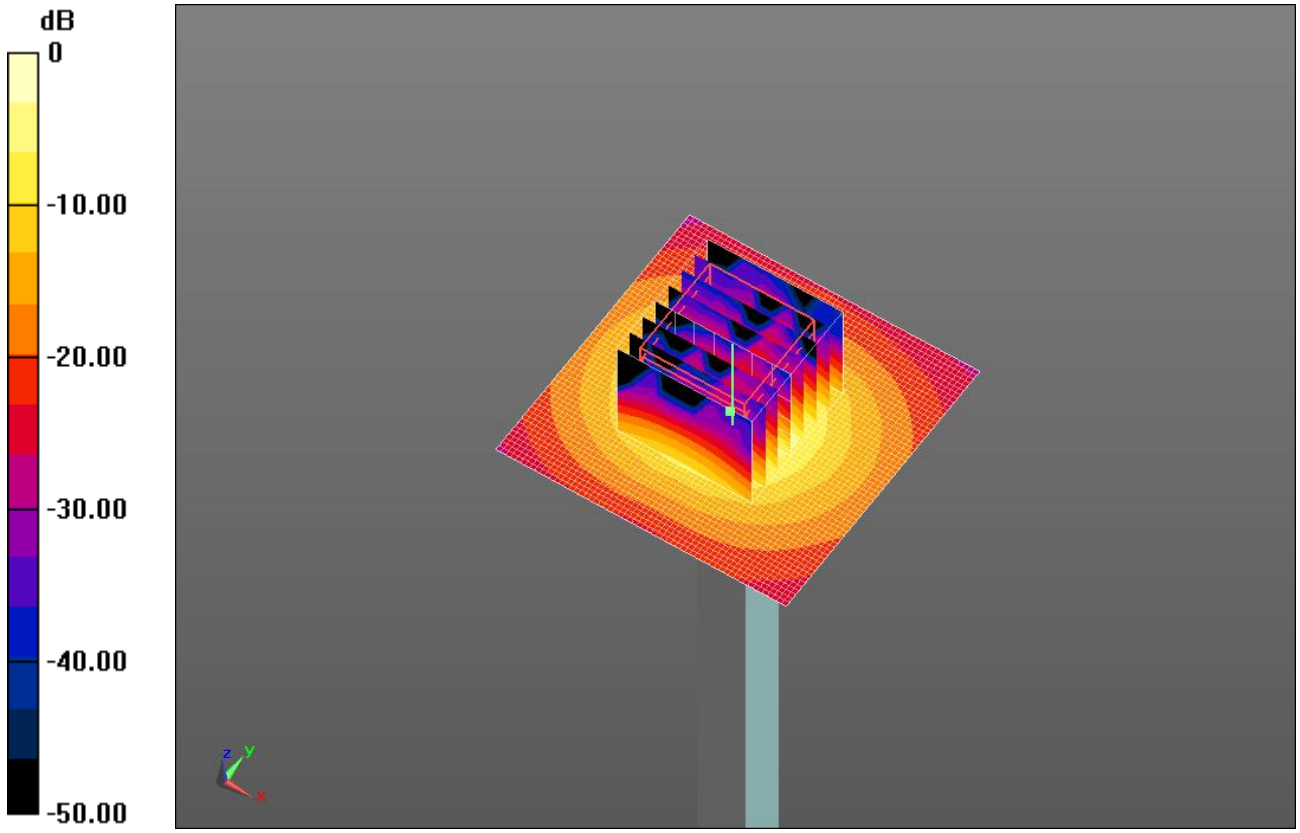

0 dB = 17.9 W/kg = 12.53 dBW/kg

20130917_SystemPerformanceCheck-D5GHzV2 SN 1138

Frequency: 5200 MHz; Duty Cycle: 1:1

Body/5.2 GHz, Pin=100mW/Z Scan (1x1x21): Measurement grid: dx=20mm, dy=20mm, dz=5mm
Maximum value of SAR (measured) = 13.4 W/kg

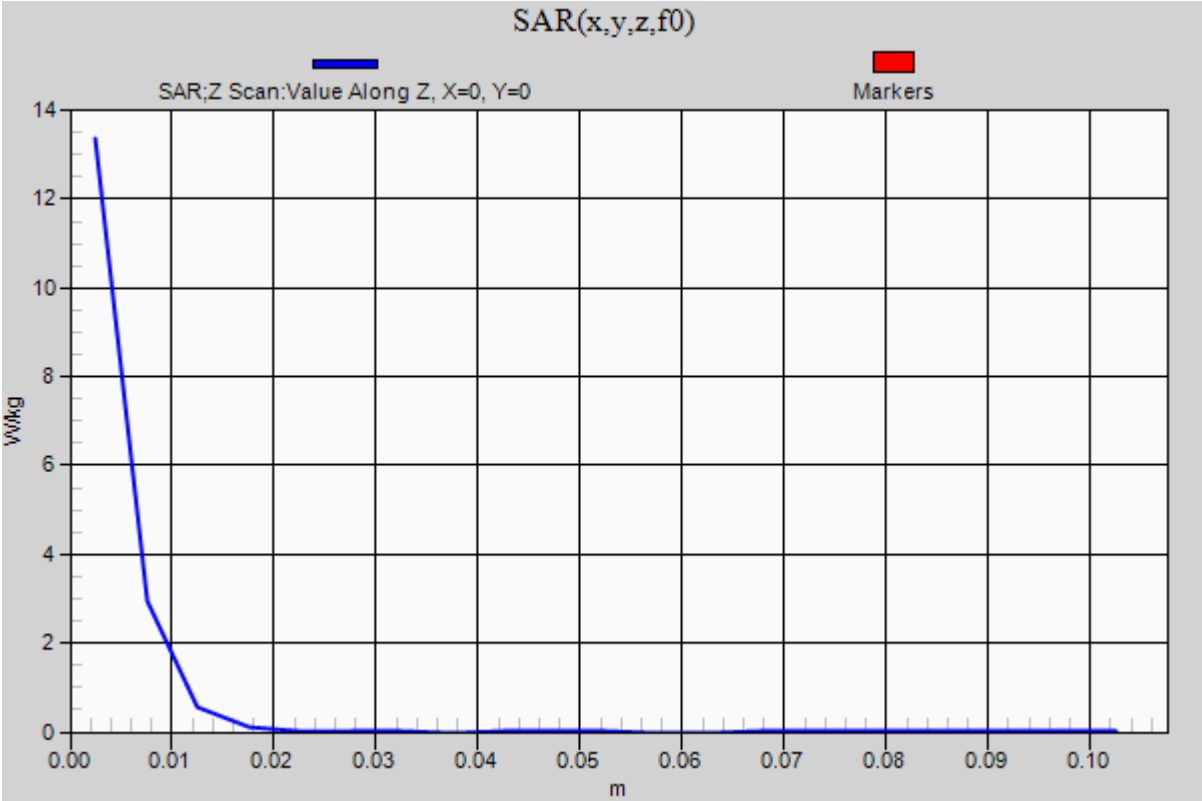

20130917_SystemPerformanceCheck-D5GHzV2 SN 1138

Frequency: 5600 MHz; Duty Cycle: 1:1; Room Ambient Temperature: 24.0°C; Liquid Temperature: 23.0°C
Medium parameters used: f = 5600 MHz; σ = 6 S/m; ε_r = 47.096; ρ = 1000 kg/m^3
DASY5 Configuration:
- Area Scan Setting: Find Secondary Maximum Within: 2.0 dB and with a peak SAR value greater than 0.0012W/kg
- Averaged Fast SAR: Polynomial fit
- Electronics: DAE4 Sn1259; Calibrated: 2/7/2013
- Probe: EX3DV4 - SN3929; ConvF(3.62, 3.62, 3.62); Calibrated: 6/24/2013;
- Sensor-Surface: 1.4mm (Mechanical Surface Detection (Locations From Previous Scan Used)), Sensor-Surface: 1.4mm (Mechanical Surface Detection)
- Phantom: ELI-A v5.0; Type: QDOVA002AA; Serial: TP 1194

Body/5.6 GHz, Pin=100mW/Area Scan (61x61x1): Interpolated grid: dx=1.000 mm, dy=1.000 mm

Reference Value = 52.177 V/m; Power Drift = -0.07 dB
Fast SAR: SAR(1 g) = 7.93 W/kg; SAR(10 g) = 2.15 W/kg
Maximum value of SAR (interpolated) = 21.5 W/kg

Body/5.6 GHz, Pin=100mW/Zoom Scan (8x8x7)/Cube 0: Measurement grid: dx=4mm, dy=4mm, dz=1.4mm

Reference Value = 52.177 V/m; Power Drift = -0.07 dB
Peak SAR (extrapolated) = 36.1 W/kg
SAR(1 g) = 8.21 W/kg; SAR(10 g) = 2.29 W/kg
Maximum value of SAR (measured) = 19.9 W/kg

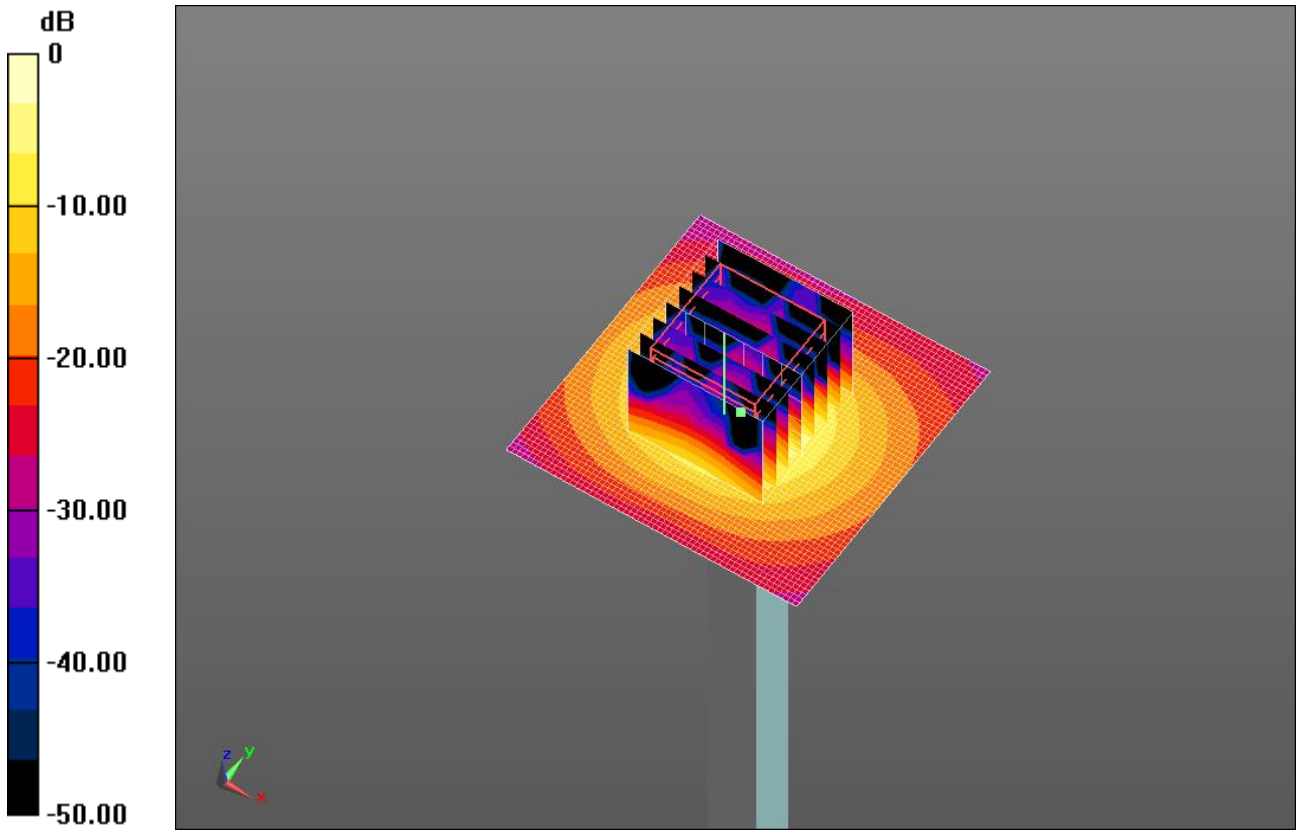

0 dB = 19.9 W/kg = 12.99 dBW/kg

20130917_SystemPerformanceCheck-D5GHzV2 SN 1138

Frequency: 5600 MHz; Duty Cycle: 1:1

Body/5.6 GHz, Pin=100mW/Z Scan (1x1x21): Measurement grid: dx=20mm, dy=20mm, dz=5mm
Maximum value of SAR (measured) = 14.0 W/kg

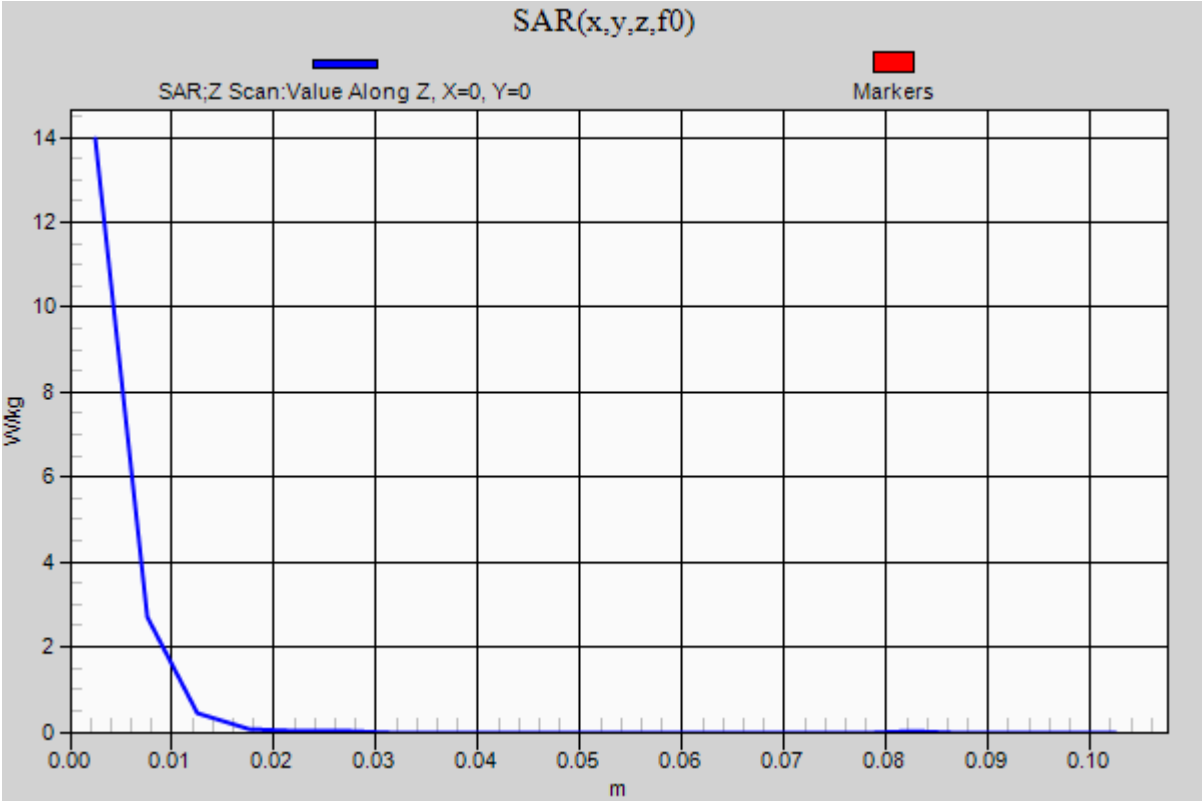

20130917_SystemPerformanceCheck-D5GHzV2 SN 1138

Frequency: 5800 MHz; Duty Cycle: 1:1; Room Ambient Temperature: 24.0°C; Liquid Temperature: 23.0°C
Medium parameters used: f = 5800 MHz; σ = 6.271 S/m; ε_r = 46.798; ρ = 1000 kg/m^3
DASY5 Configuration:
- Area Scan Setting: Find Secondary Maximum Within: 2.0 dB and with a peak SAR value greater than 0.0012W/kg
- Averaged Fast SAR: Polynomial fit
- Electronics: DAE4 Sn1259; Calibrated: 2/7/2013
- Probe: EX3DV4 - SN3929; ConvF(3.81, 3.81, 3.81); Calibrated: 6/24/2013;
- Sensor-Surface: 1.4mm (Mechanical Surface Detection (Locations From Previous Scan Used)), Sensor-Surface: 1.4mm (Mechanical Surface Detection)
- Phantom: ELI-A v5.0; Type: QDOVA002AA; Serial: TP 1194

Body/5.8 GHz, Pin=100mW/Area Scan (61x61x1): Interpolated grid: dx=1.000 mm, dy=1.000 mm

Reference Value = 49.669 V/m; Power Drift = 0.01 dB
Fast SAR: SAR(1 g) = 7.31 W/kg; SAR(10 g) = 1.98 W/kg
Maximum value of SAR (interpolated) = 20.4 W/kg

Body/5.8 GHz, Pin=100mW/Zoom Scan (8x8x7)/Cube 0: Measurement grid: dx=4mm, dy=4mm, dz=1.4mm

Reference Value = 49.669 V/m; Power Drift = 0.01 dB
Peak SAR (extrapolated) = 33.5 W/kg
SAR(1 g) = 7.61 W/kg; SAR(10 g) = 2.13 W/kg
Maximum value of SAR (measured) = 18.6 W/kg

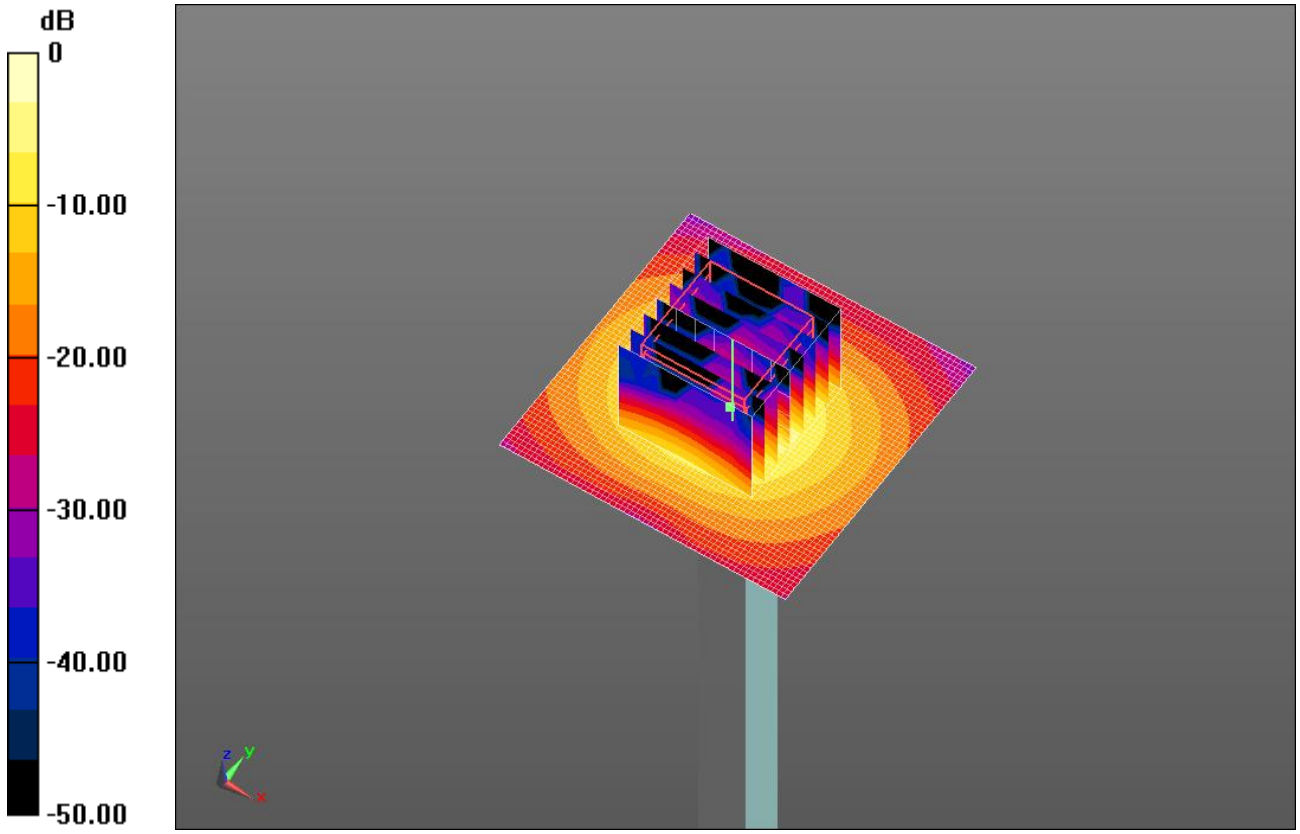

0 dB = 18.6 W/kg = 12.70 dBW/kg

20130917_SystemPerformanceCheck-D5GHzV2 SN 1138

Frequency: 5800 MHz; Duty Cycle: 1:1

Body/5.8 GHz, Pin=100mW/Z Scan (1x1x21): Measurement grid: dx=20mm, dy=20mm, dz=5mm
Maximum value of SAR (measured) = 13.3 W/kg

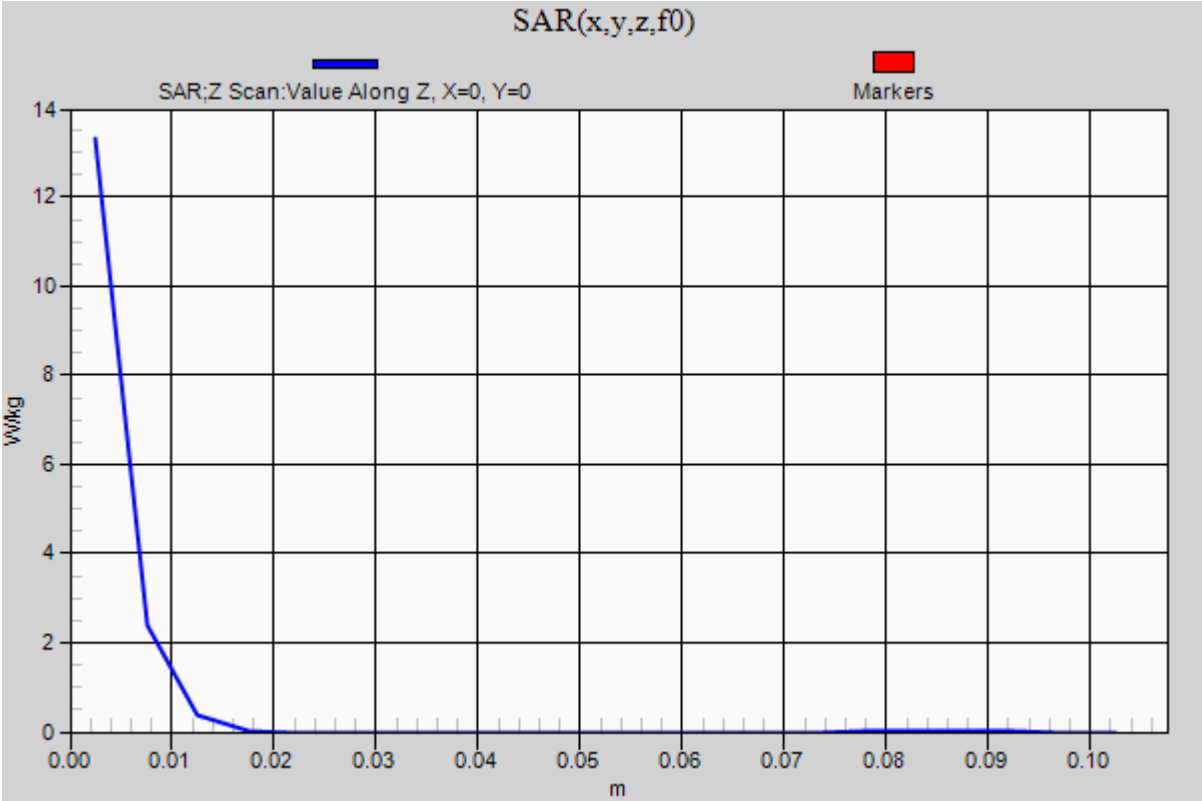

20130830_SystemPerformanceCheck-D5GHzV2 SN 1138

Frequency: 5800 MHz; Duty Cycle: 1:1; Room Ambient Temperature: 24.0°C; Liquid Temperature: 23.0°C
Medium parameters used: f = 5800 MHz; σ = 5.929 S/m; ε_r = 47.467; ρ = 1000 kg/m^3
DASY5 Configuration:
- Area Scan Setting: Find Secondary Maximum Within: 2.0 dB and with a peak SAR value greater than 0.0012W/kg
- Averaged Fast SAR: Polynomial fit
- Electronics: DAE4 Sn1359; Calibrated: 2/8/2013
- Probe: EX3DV4 - SN3773; ConvF(4.05, 4.05, 4.05); Calibrated: 4/26/2013;
- Sensor-Surface: 1.4mm (Mechanical Surface Detection (Locations From Previous Scan Used)), Sensor-Surface: 1.4mm (Mechanical Surface Detection)
- Phantom: ELI v5.0; Type: QDOVA002AA; Serial: TP:1198

Body/5.8 GHz, Pin=100mW/Area Scan (61x61x1): Interpolated grid: dx=1.000 mm, dy=1.000 mm

Reference Value = 43.028 V/m; Power Drift = 0.02 dB
Fast SAR: SAR(1 g) = 5.91 W/kg; SAR(10 g) = 1.68 W/kg
Maximum value of SAR (interpolated) = 15.9 W/kg

Body/5.8 GHz, Pin=100mW/Zoom Scan (8x8x7)/Cube 0: Measurement grid: dx=4mm, dy=4mm, dz=1.4mm

Reference Value = 43.028 V/m; Power Drift = 0.02 dB
Peak SAR (extrapolated) = 31.5 W/kg
SAR(1 g) = 6.63 W/kg; SAR(10 g) = 1.87 W/kg
Maximum value of SAR (measured) = 16.5 W/kg

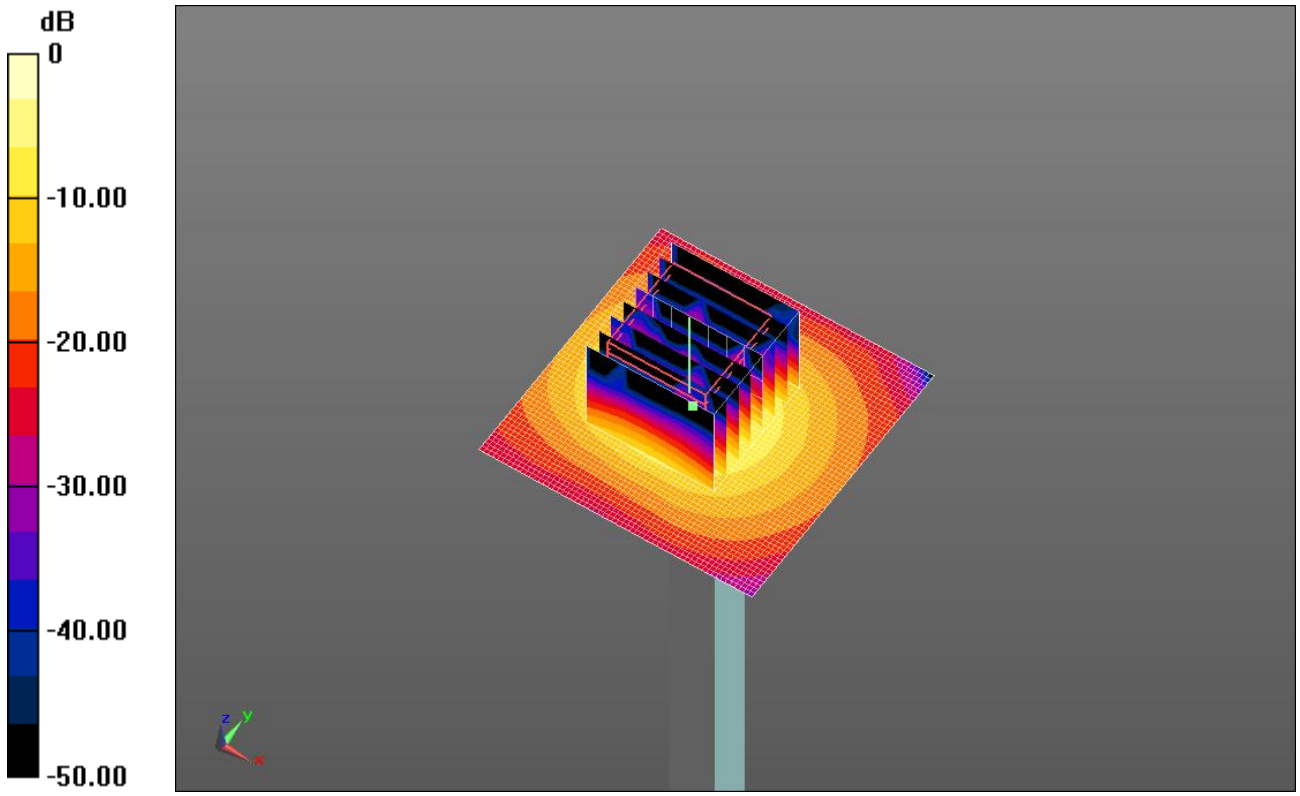

0 dB = 16.5 W/kg = 12.17 dBW/kg

20130830_SystemPerformanceCheck-D5GHzV2 SN 1138

Frequency: 5800 MHz; Duty Cycle: 1:1

Body/5.8 GHz, Pin=100mW/Z Scan (1x1x21): Measurement grid: dx=20mm, dy=20mm, dz=5mm
Maximum value of SAR (measured) = 9.81 W/kg

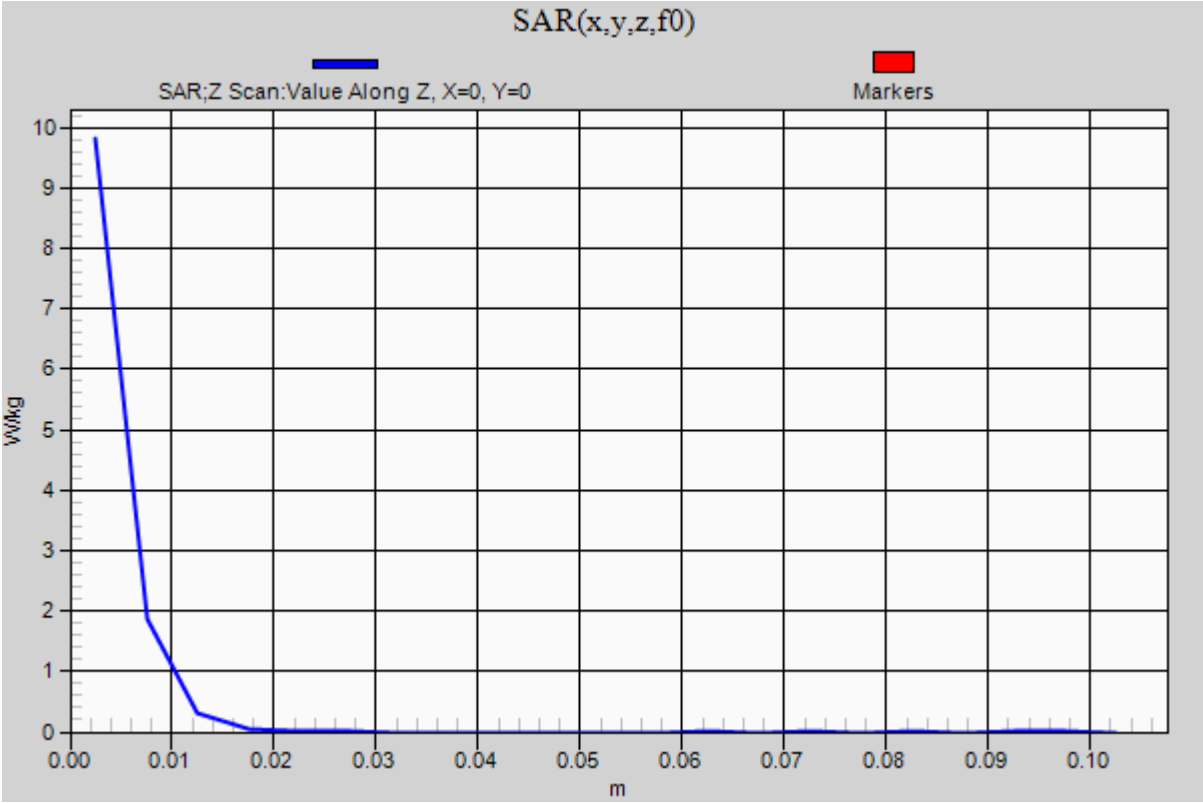

20130903_SystemPerformanceCheck-D5GHzV2 SN 1138

Frequency: 5200 MHz; Duty Cycle: 1:1; Room Ambient Temperature: 24.0°C; Liquid Temperature: 23.0°C
Medium parameters used: f = 5200 MHz; σ = 5.256 S/m; ε_r = 47.391; ρ = 1000 kg/m^3
DASY5 Configuration:
- Area Scan Setting: Find Secondary Maximum Within: 2.0 dB and with a peak SAR value greater than 0.0012W/kg
- Averaged Fast SAR: Polynomial fit
- Electronics: DAE4 Sn1359; Calibrated: 2/8/2013
- Probe: EX3DV4 - SN3773; ConvF(4.39, 4.39, 4.39); Calibrated: 4/26/2013;
- Sensor-Surface: 1.4mm (Mechanical Surface Detection)
- Phantom: ELI v5.0; Type: QDOVA002AA; Serial: TP:1198

Body/5.2 GHz, Pin=100mW/Area Scan (61x61x1): Interpolated grid: dx=1.000 mm, dy=1.000 mm
Reference Value = 50.610 V/m; Power Drift = 0.02 dB
Fast SAR: SAR(1 g) = 7.51 W/kg; SAR(10 g) = 2.09 W/kg
Maximum value of SAR (interpolated) = 19.2 W/kg

Body/5.2 GHz, Pin=100mW/Zoom Scan (8x8x7)/Cube 0: Measurement grid: dx=4mm, dy=4mm, dz=1.4mm
Reference Value = 50.610 V/m; Power Drift = 0.02 dB
Peak SAR (extrapolated) = 33.4 W/kg
SAR(1 g) = 7.77 W/kg; SAR(10 g) = 2.19 W/kg
Maximum value of SAR (measured) = 18.7 W/kg

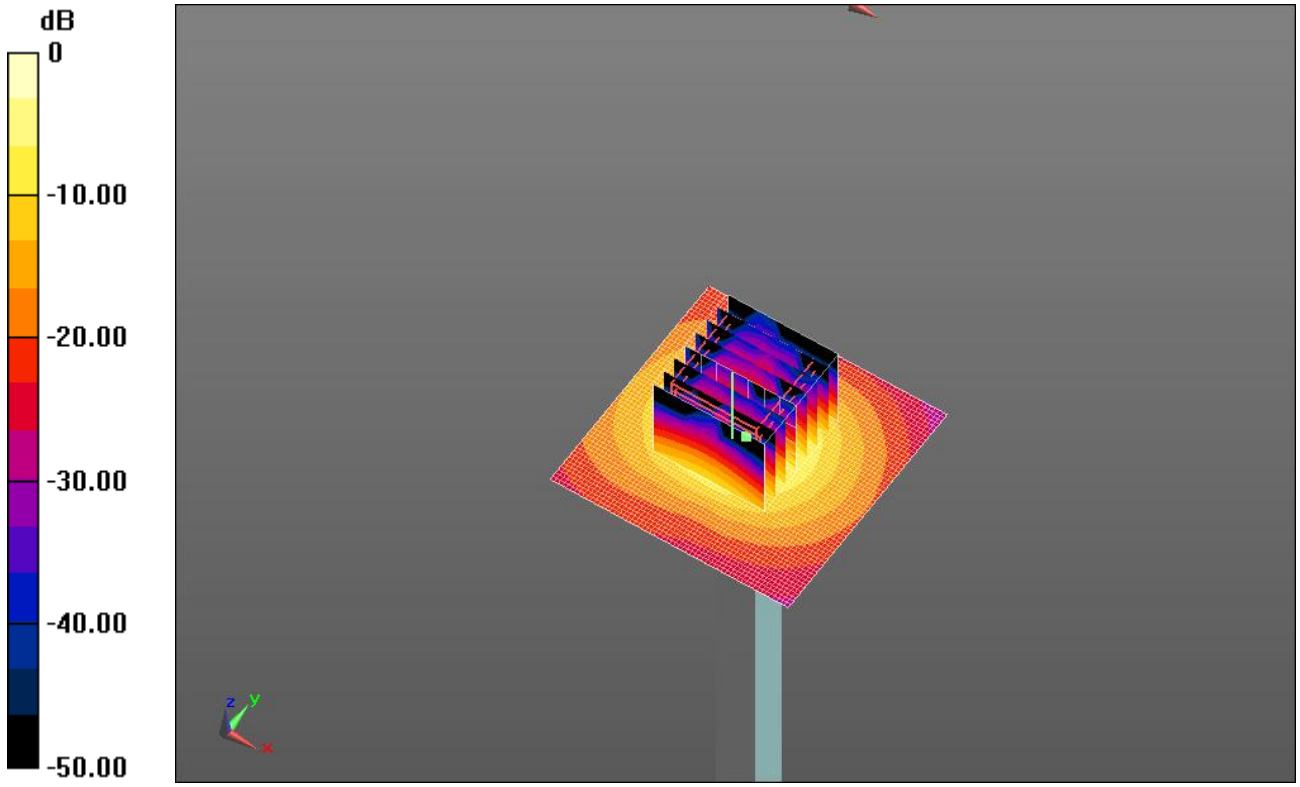

0 dB = 18.7 W/kg = 12.72 dBW/kg

20130903_SystemPerformanceCheck-D5GHzV2 SN 1138

Frequency: 5200 MHz; Duty Cycle: 1:1

Body/5.2 GHz, Pin=100mW/Z Scan (1x1x21): Measurement grid: dx=20mm, dy=20mm, dz=5mm
Maximum value of SAR (measured) = 12.3 W/kg

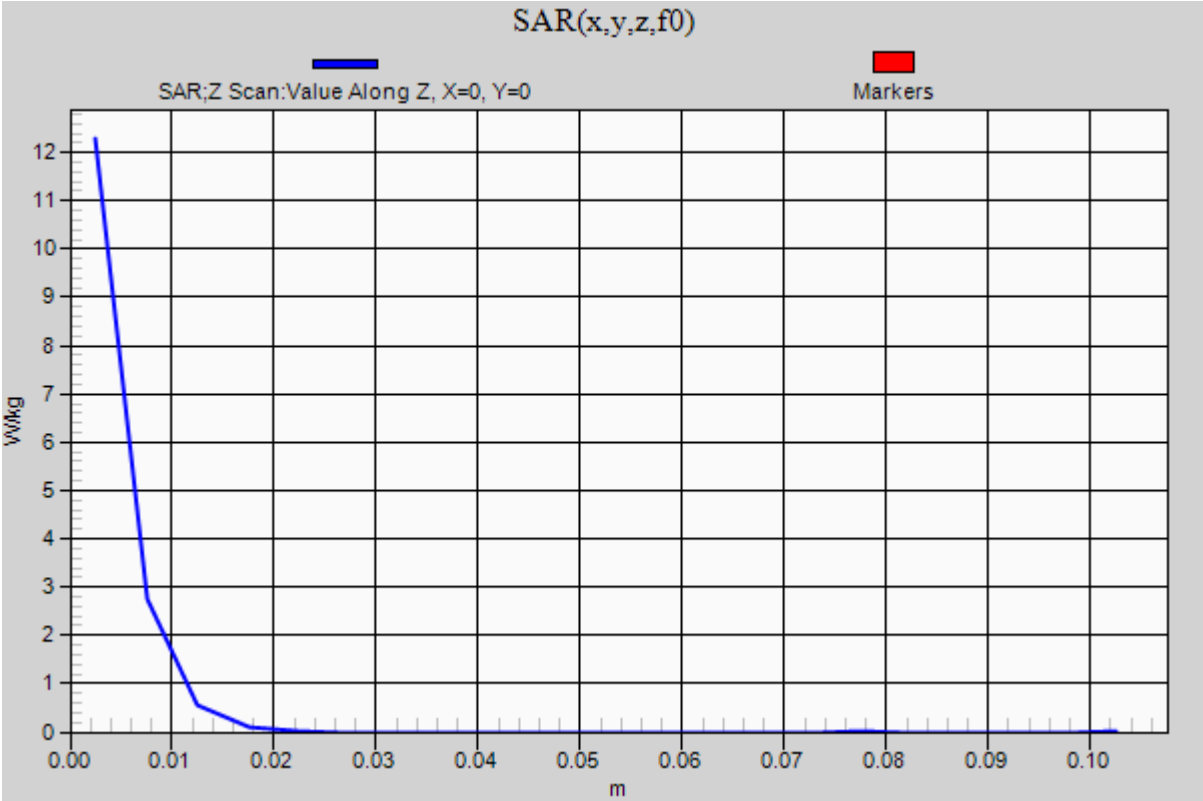

20130903_SystemPerformanceCheck-D5GHzV2 SN 1138

Frequency: 5500 MHz; Duty Cycle: 1:1; Room Ambient Temperature: 24.0°C; Liquid Temperature: 23.0°C
Medium parameters used: f = 5500 MHz; σ = 5.666 S/m; ε_r = 46.796; ρ = 1000 kg/m^3
DASY5 Configuration:
- Area Scan Setting: Find Secondary Maximum Within: 2.0 dB and with a peak SAR value greater than 0.0012W/kg
- Averaged Fast SAR: Polynomial fit
- Electronics: DAE4 Sn1359; Calibrated: 2/8/2013
- Probe: EX3DV4 - SN3773; ConvF(3.87, 3.87, 3.87); Calibrated: 4/26/2013;
- Sensor-Surface: 1.4mm (Mechanical Surface Detection (Locations From Previous Scan Used)), Sensor-Surface: 1.4mm (Mechanical Surface Detection)
- Phantom: ELI v5.0; Type: QDOVA002AA; Serial: TP:1198

Body/5.5 GHz, Pin=100mW/Area Scan (61x61x1): Interpolated grid: dx=1.000 mm, dy=1.000 mm

Reference Value = 50.721 V/m; Power Drift = 0.09 dB
Fast SAR: SAR(1 g) = 8 W/kg; SAR(10 g) = 2.23 W/kg
Maximum value of SAR (interpolated) = 21.3 W/kg

Body/5.5 GHz, Pin=100mW/Zoom Scan (8x8x7)/Cube 0: Measurement grid: dx=4mm, dy=4mm, dz=1.4mm

Reference Value = 50.721 V/m; Power Drift = 0.09 dB
Peak SAR (extrapolated) = 36.6 W/kg
SAR(1 g) = 8.33 W/kg; SAR(10 g) = 2.36 W/kg
Maximum value of SAR (measured) = 20.4 W/kg

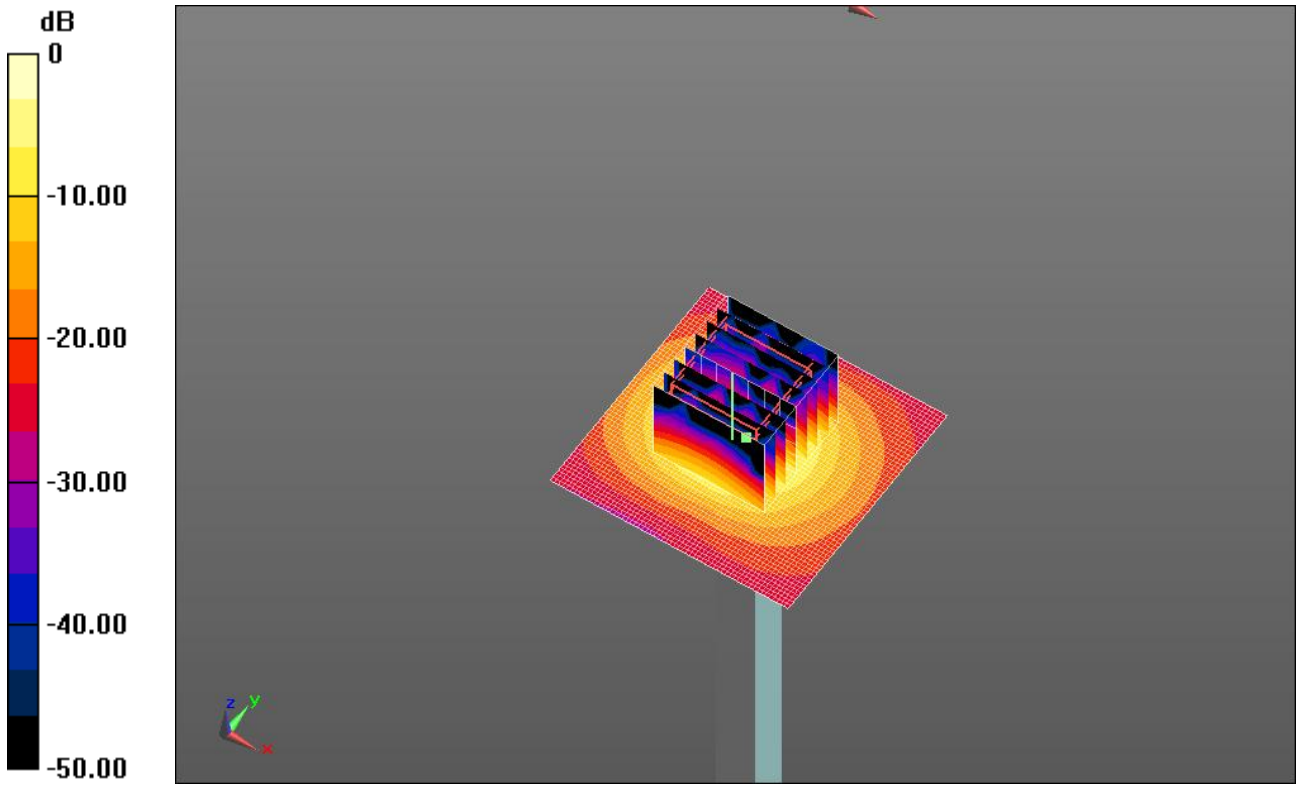

0 dB = 20.4 W/kg = 13.10 dBW/kg

20130903_SystemPerformanceCheck-D5GHzV2 SN 1138

Frequency: 5500 MHz; Duty Cycle: 1:1

Body/5.5 GHz, Pin=100mW/Z Scan (1x1x21): Measurement grid: dx=20mm, dy=20mm, dz=5mm
Maximum value of SAR (measured) = 13.1 W/kg

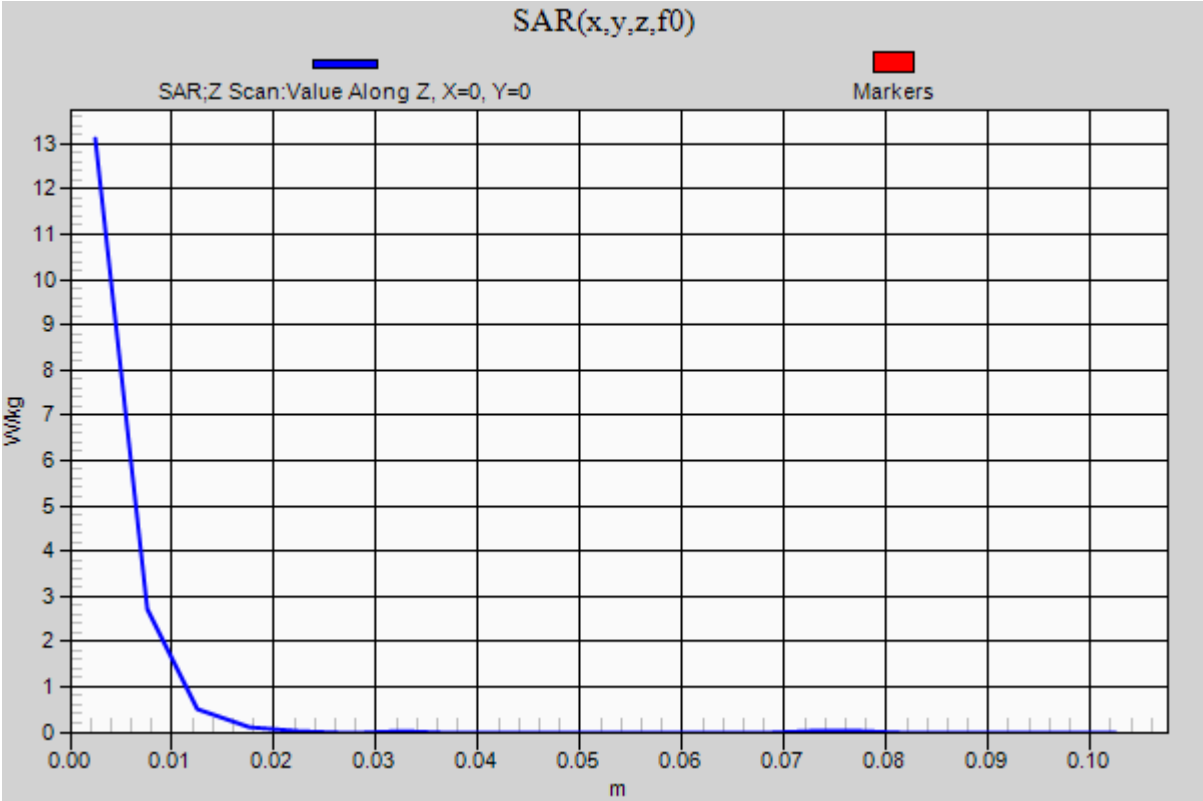

20130903_SystemPerformanceCheck-D5GHzV2 SN 1138

Frequency: 5600 MHz; Duty Cycle: 1:1; Room Ambient Temperature: 24.0°C; Liquid Temperature: 23.0°C
Medium parameters used: f = 5600 MHz; σ = 5.78 S/m; ε_r = 46.602; ρ = 1000 kg/m^3
DASY5 Configuration:
- Area Scan Setting: Find Secondary Maximum Within: 2.0 dB and with a peak SAR value greater than 0.0012W/kg
- Averaged Fast SAR: Polynomial fit
- Electronics: DAE4 Sn1359; Calibrated: 2/8/2013
- Probe: EX3DV4 - SN3773; ConvF(3.79, 3.79, 3.79); Calibrated: 4/26/2013;
- Sensor-Surface: 1.4mm (Mechanical Surface Detection (Locations From Previous Scan Used)), Sensor-Surface: 1.4mm (Mechanical Surface Detection)
- Phantom: ELI v5.0; Type: QDOVA002AA; Serial: TP:1198

Body/5.6 GHz, Pin=100mW/Area Scan (61x61x1): Interpolated grid: dx=1.000 mm, dy=1.000 mm
Reference Value = 49.928 V/m; Power Drift = 0.07 dB
Fast SAR: SAR(1 g) = 8.01 W/kg; SAR(10 g) = 2.21 W/kg
Maximum value of SAR (interpolated) = 21.5 W/kg

Body/5.6 GHz, Pin=100mW/Zoom Scan (8x8x7)/Cube 0: Measurement grid: dx=4mm, dy=4mm, dz=1.4mm
Reference Value = 49.928 V/m; Power Drift = 0.07 dB
Peak SAR (extrapolated) = 39.4 W/kg
SAR(1 g) = 8.37 W/kg; SAR(10 g) = 2.34 W/kg
Maximum value of SAR (measured) = 20.8 W/kg

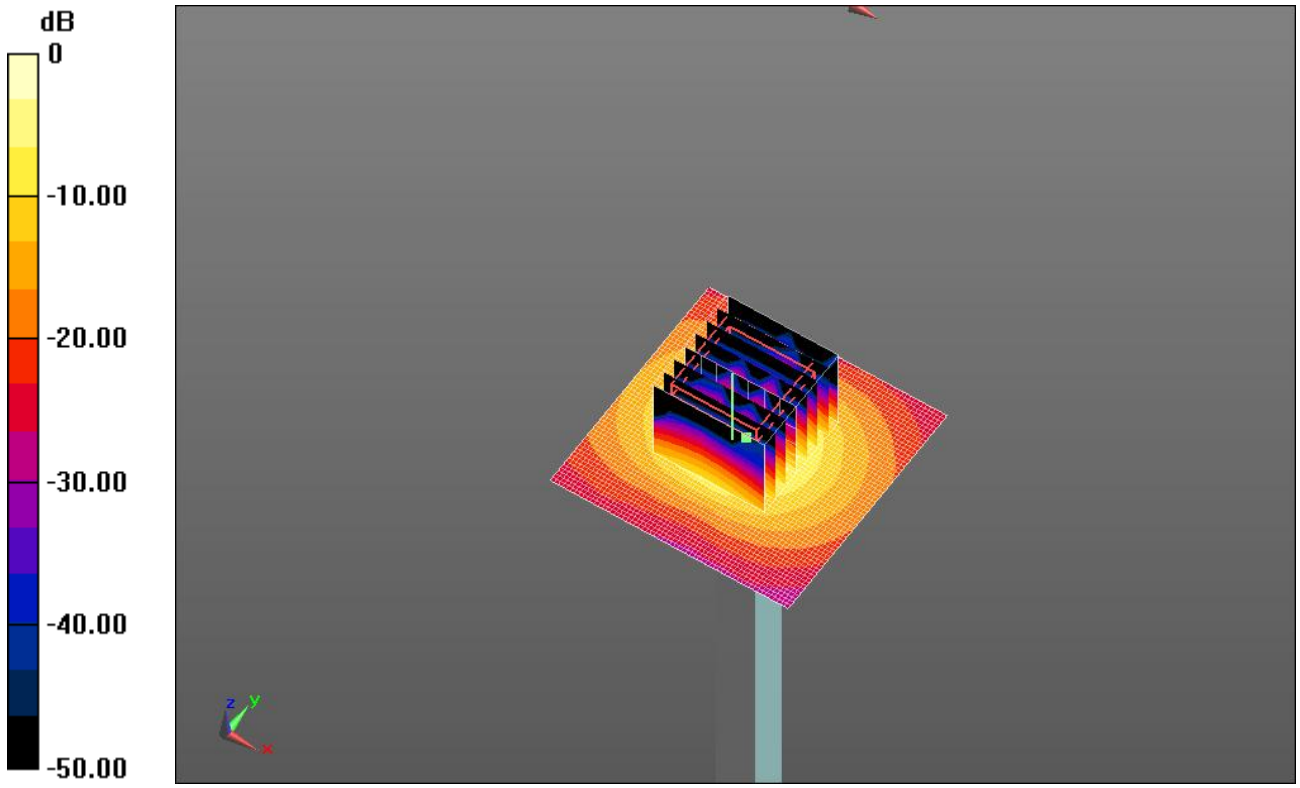

0 dB = 20.8 W/kg = 13.18 dBW/kg

20130903_SystemPerformanceCheck-D5GHzV2 SN 1138

Frequency: 5600 MHz; Duty Cycle: 1:1

Body/5.6 GHz, Pin=100mW/Z Scan (1x1x21): Measurement grid: dx=20mm, dy=20mm, dz=5mm
Maximum value of SAR (measured) = 13.1 W/kg

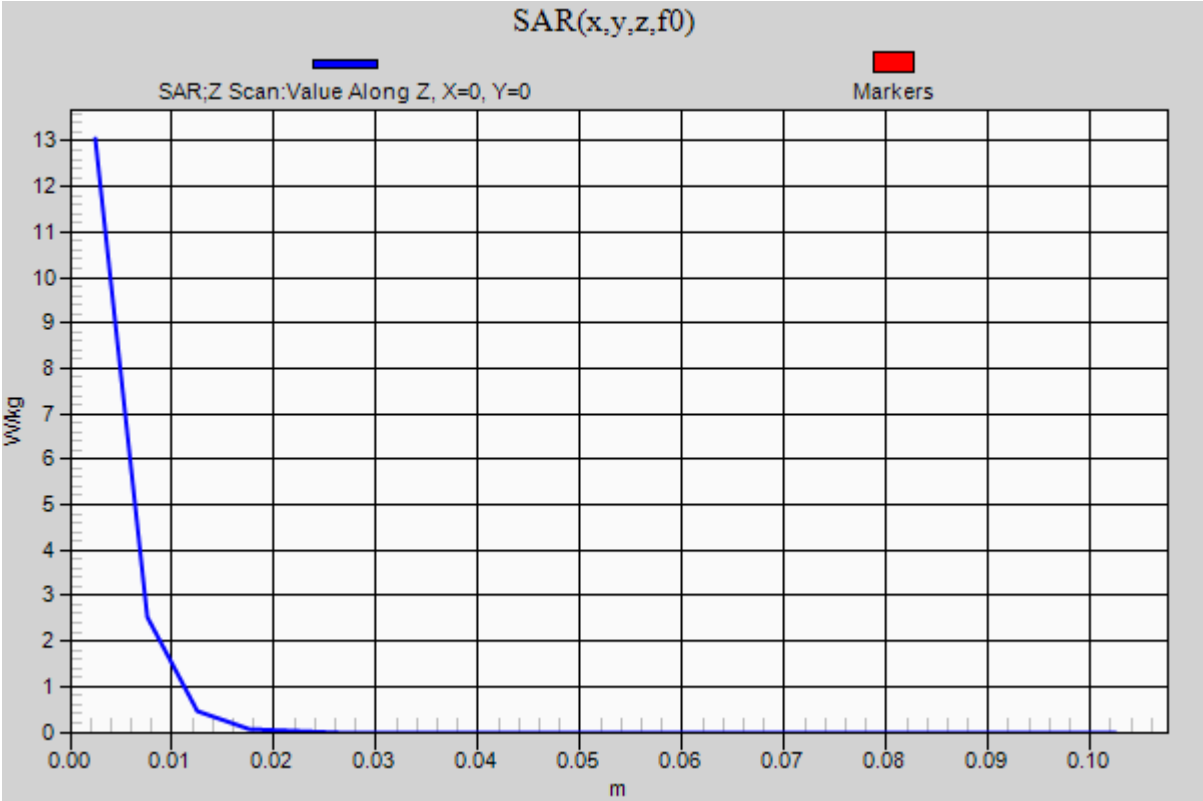

2013820_SystemPerformanceCheck-D2450V2 SN 899

Frequency: 2450 MHz; Duty Cycle: 1:1; Room Ambient Temperature: 24.0°C; Liquid Temperature: 23.0°C
Medium parameters used: f = 2450 MHz; σ = 2 S/m; ε_r = 51.401; ρ = 1000 kg/m^3
DASY5 Configuration:
- Area Scan Setting: Find Secondary Maximum Within: 2.0 dB and with a peak SAR value greater than 0.0012W/kg
- Averaged Fast SAR: Polynomial fit
- Electronics: DAE4 Sn1377; Calibrated: 7/15/2013
- Probe: EX3DV4 - SN3902; ConvF(7.2, 7.2, 7.2); Calibrated: 7/12/2013;
- Sensor-Surface: 2.5mm (Mechanical Surface Detection)
- Phantom: ELI v5.0; Type: QDOVA002AA; Serial: TP:xxxx

Body/Pin=100 mW/Area Scan (71x71x1): Interpolated grid: dx=1.200 mm, dy=1.200 mm

Reference Value = 60.786 V/m; Power Drift = -0.18 dB
Fast SAR: SAR(1 g) = 5.53 W/kg; SAR(10 g) = 2.39 W/kg
Maximum value of SAR (interpolated) = 8.04 W/kg

Body/Pin=100 mW/Zoom Scan (7x7x7)/Cube 0: Measurement grid: dx=5mm, dy=5mm, dz=5mm

Reference Value = 60.786 V/m; Power Drift = -0.18 dB
Peak SAR (extrapolated) = 10.8 W/kg
SAR(1 g) = 5.27 W/kg; SAR(10 g) = 2.45 W/kg
Maximum value of SAR (measured) = 7.46 W/kg

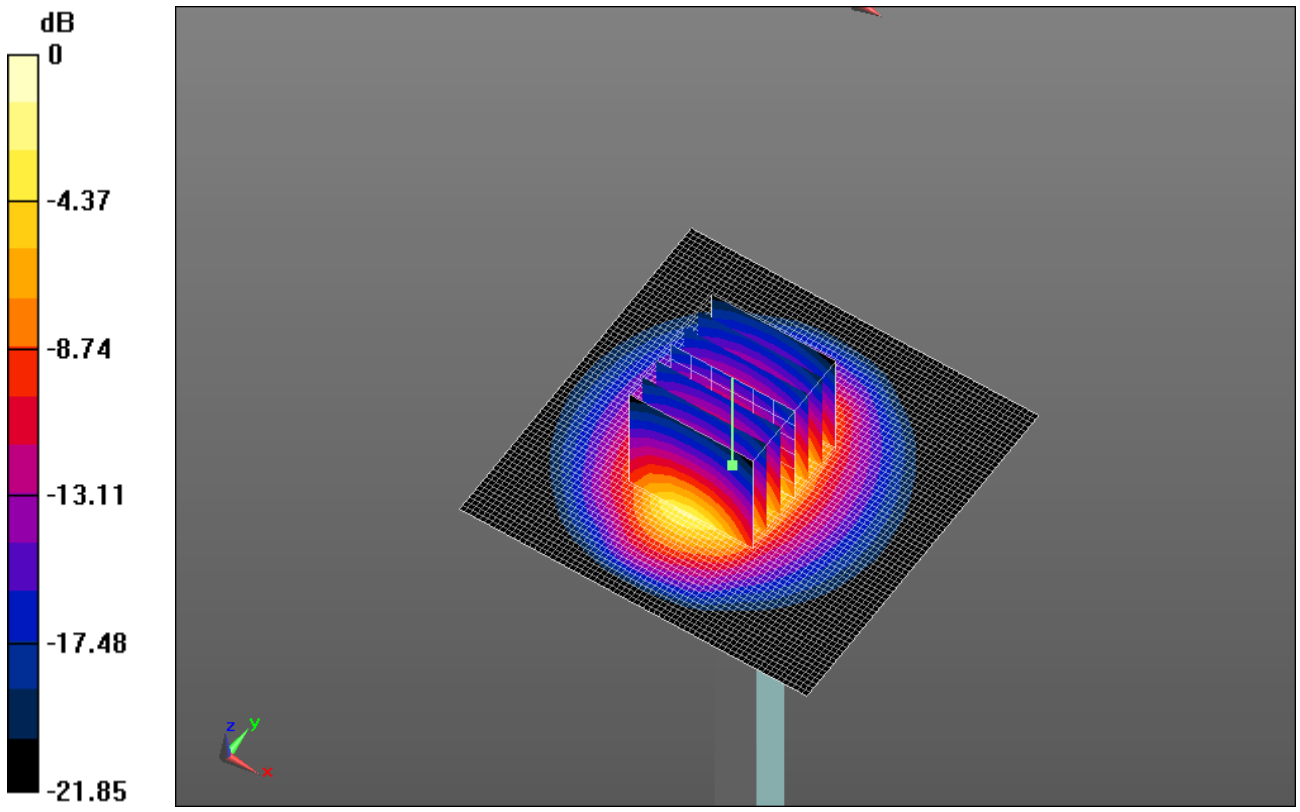

0 dB = 7.46 W/kg = 8.73 dBW/kg

2013820_SystemPerformanceCheck-D2450V2 SN 899

Frequency: 2450 MHz; Duty Cycle: 1:1

Body/Pin=100 mW/Z Scan (1x1x21): Measurement grid: dx=20mm, dy=20mm, dz=5mm
Maximum value of SAR (measured) = 7.06 W/kg

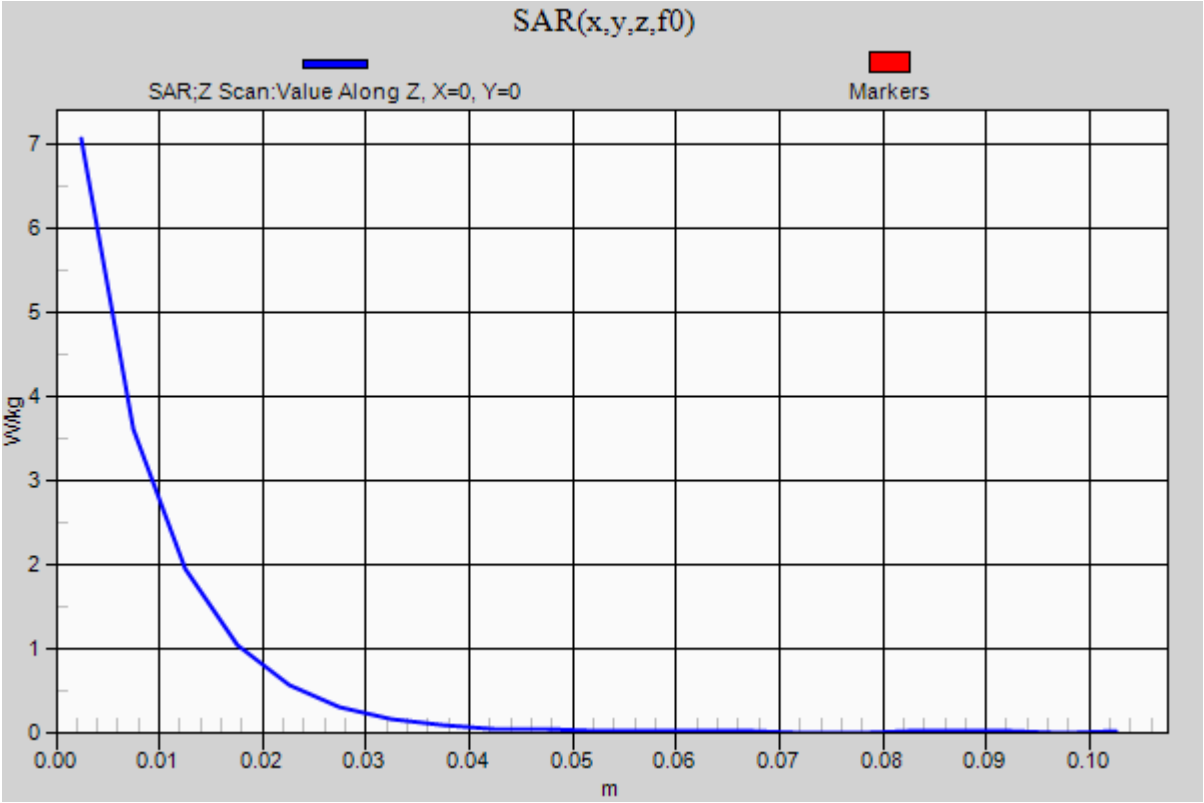

20130906 SystemPerformanceCheck-D1900V2 SN 5d140

Frequency: 1900 MHz; Duty Cycle: 1:1; Room Ambient Temperature: 24.0°C; Liquid Temperature: 23.0°C
Medium parameters used: f = 1900 MHz; σ = 1.501 S/m; ε_r = 52.688; ρ = 1000 kg/m^3
DASY5 Configuration:
- Area Scan Setting: Find Secondary Maximum Within: 2.0 dB and with a peak SAR value greater than 0.0012W/kg
- Averaged Fast SAR: Polynomial fit
- Electronics: DAE4 Sn1377; Calibrated: 7/15/2013
- Probe: EX3DV4 - SN3902; ConvF(7.61, 7.61, 7.61); Calibrated: 7/12/2013;
- Sensor-Surface: 2.5mm (Mechanical Surface Detection)
- Phantom: ELI v5.0; Type: QDOVA002AA; Serial: TP:xxxx

Body/Pin=100 mW/Area Scan (61x61x1): Interpolated grid: dx=1.500 mm, dy=1.500 mm

Reference Value = 58.063 V/m; Power Drift = 0.01 dB
Fast SAR: SAR(1 g) = 3.89 W/kg; SAR(10 g) = 1.98 W/kg
Maximum value of SAR (interpolated) = 5.20 W/kg

Body/Pin=100 mW/Zoom Scan (7x7x7)/Cube 0: Measurement grid: dx=5mm, dy=5mm, dz=5mm

Reference Value = 58.063 V/m; Power Drift = 0.01 dB
Peak SAR (extrapolated) = 6.98 W/kg
SAR(1 g) = 3.88 W/kg; SAR(10 g) = 2.04 W/kg
Maximum value of SAR (measured) = 5.23 W/kg

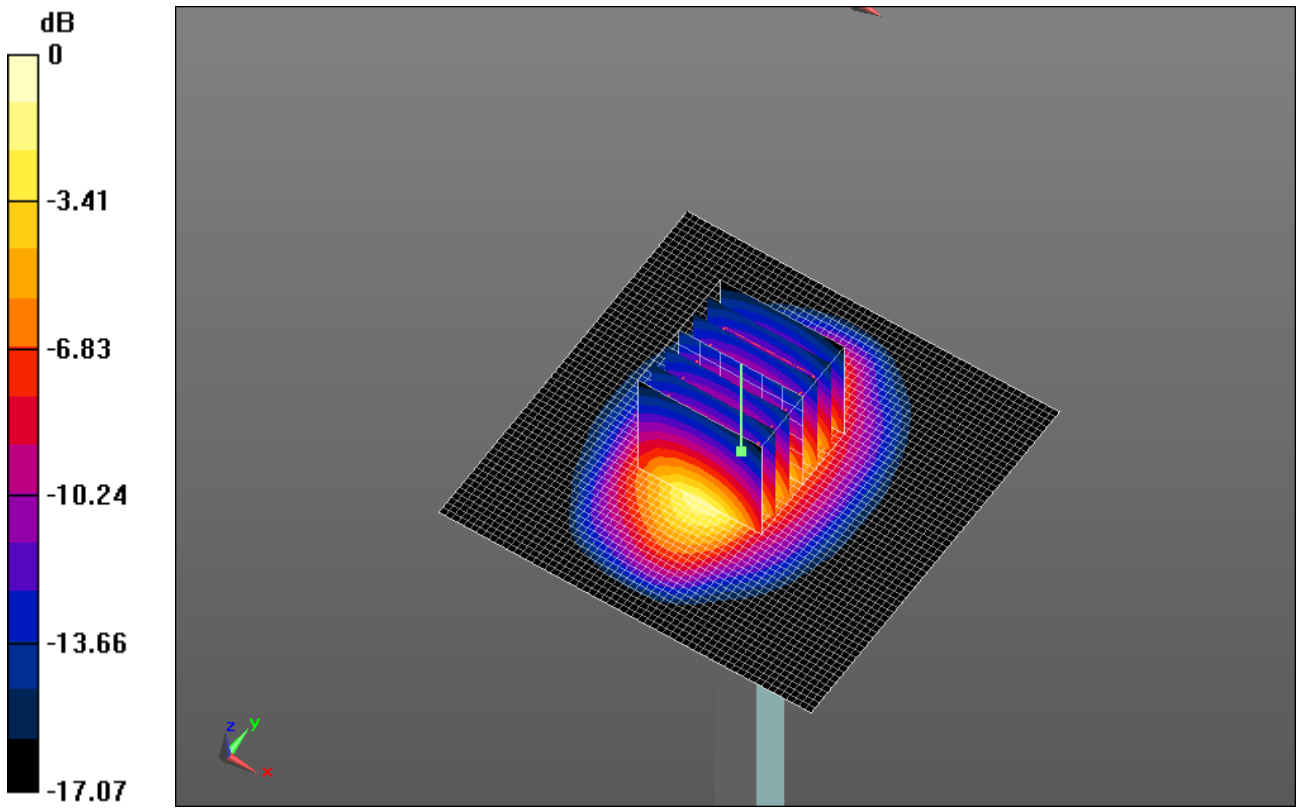

0 dB = 5.23 W/kg = 7.19 dBW/kg

20130906 SystemPerformanceCheck-D1900V2 SN 5d140

Frequency: 1900 MHz; Duty Cycle: 1:1

Body/Pin=100 mW/Z Scan (1x1x21): Measurement grid: dx=20mm, dy=20mm, dz=5mm
Maximum value of SAR (measured) = 4.92 W/kg

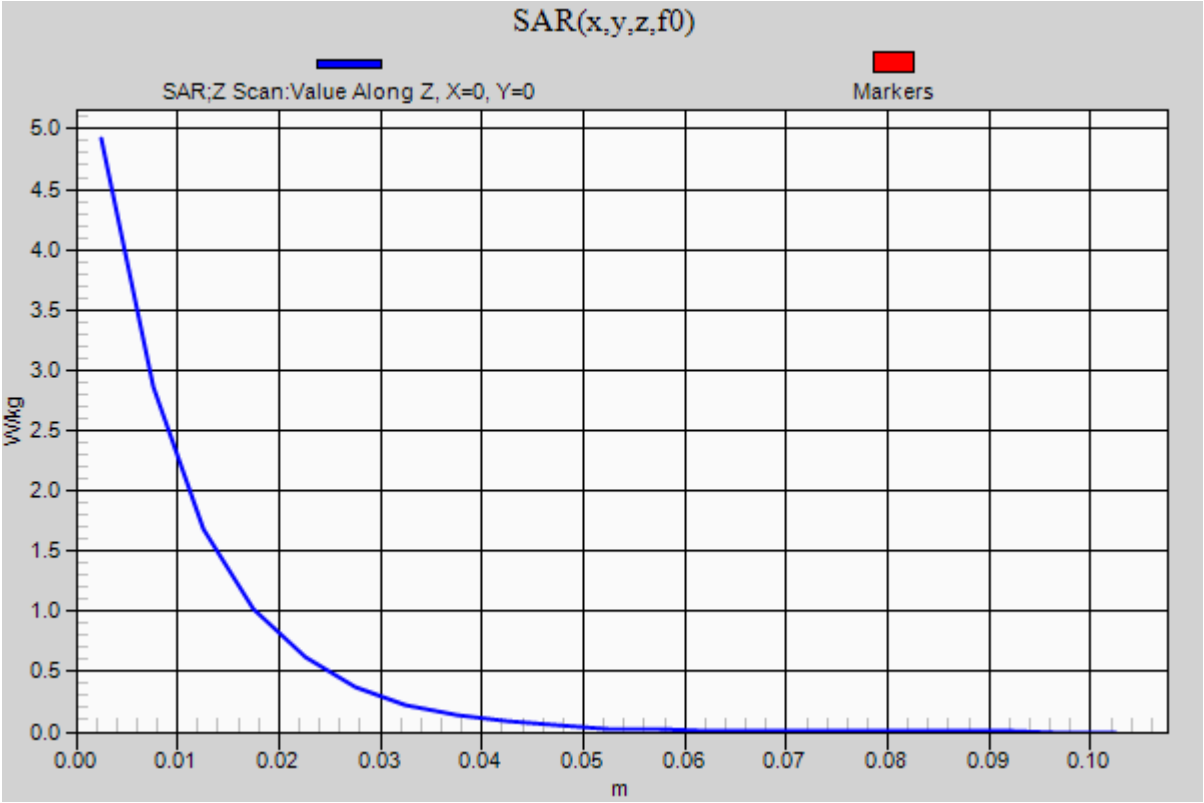

20130909 SystemPerformanceCheck-D750V3 SN 1019

Frequency: 750 MHz; Duty Cycle: 1:1; Room Ambient Temperature: 24.0°C; Liquid Temperature: 23.0°C
Medium parameters used: f = 750 MHz; σ = 0.967 S/m; ε_r = 54.579; ρ = 1000 kg/m^3
DASY5 Configuration:
- Area Scan Setting: Find Secondary Maximum Within: 2.0 dB and with a peak SAR value greater than 0.0012W/kg
- Averaged Fast SAR: Polynomial fit
- Electronics: DAE4 Sn1377; Calibrated: 7/15/2013
- Probe: EX3DV4 - SN3902; ConvF(10.15, 10.15, 10.15); Calibrated: 7/12/2013;
- Sensor-Surface: 2.5mm (Mechanical Surface Detection)
- Phantom: ELI v5.0; Type: QDOVA002AA; Serial: TP:xxxx

Body/Pin=100 mW/Area Scan (61x61x1): Interpolated grid: dx=1.500 mm, dy=1.500 mm

Reference Value = 32.664 V/m; Power Drift = 0.02 dB
Fast SAR: SAR(1 g) = 0.898 W/kg; SAR(10 g) = 0.610 W/kg
Maximum value of SAR (interpolated) = 1.06 W/kg

Body/Pin=100 mW/Zoom Scan (7x7x7)/Cube 0: Measurement grid: dx=5mm, dy=5mm, dz=5mm

Reference Value = 32.664 V/m; Power Drift = 0.02 dB
Peak SAR (extrapolated) = 1.30 W/kg
SAR(1 g) = 0.884 W/kg; SAR(10 g) = 0.586 W/kg
Maximum value of SAR (measured) = 1.07 W/kg

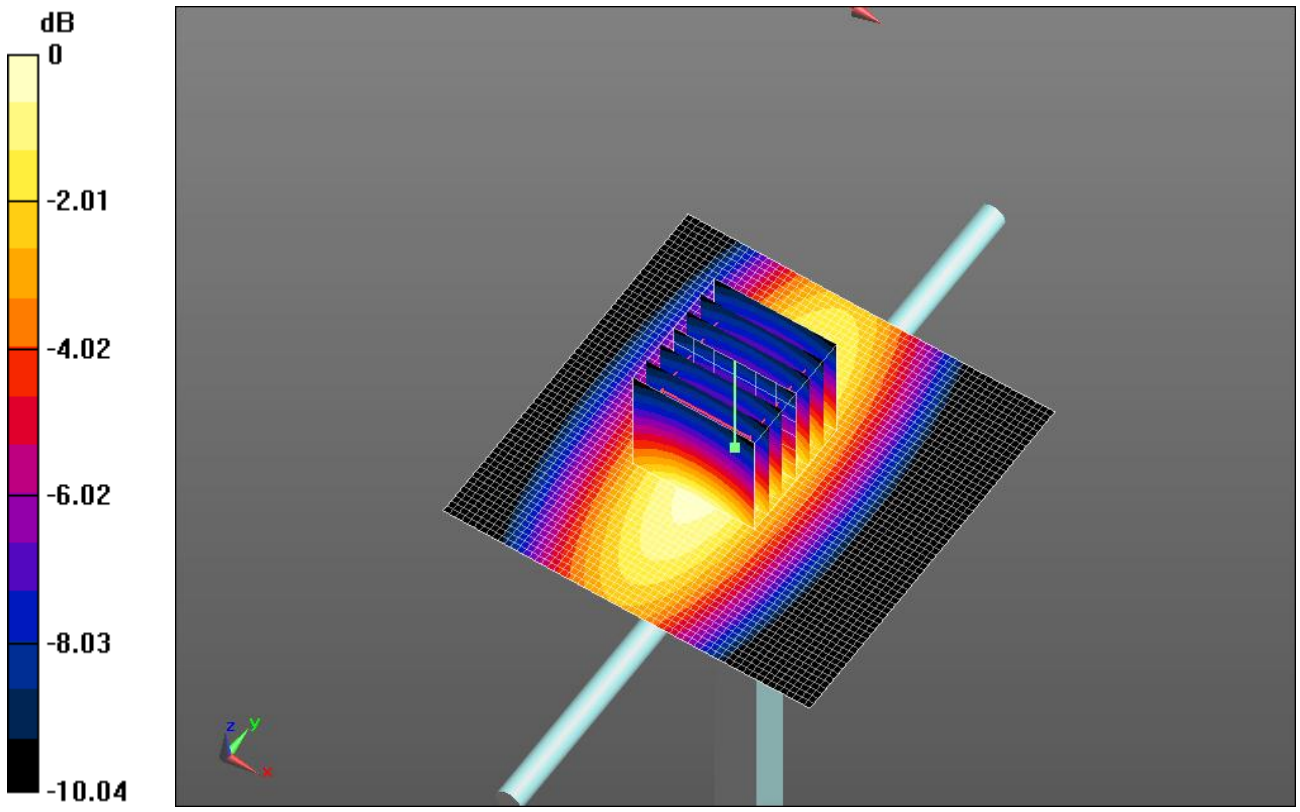

0 dB = 1.07 W/kg = 0.29 dBW/kg

20130909 SystemPerformanceCheck-D750V3 SN 1019

Frequency: 750 MHz; Duty Cycle: 1:1

Body/Pin=100 mW/Z Scan (1x1x21): Measurement grid: dx=20mm, dy=20mm, dz=5mm
Maximum value of SAR (measured) = 1.01 W/kg

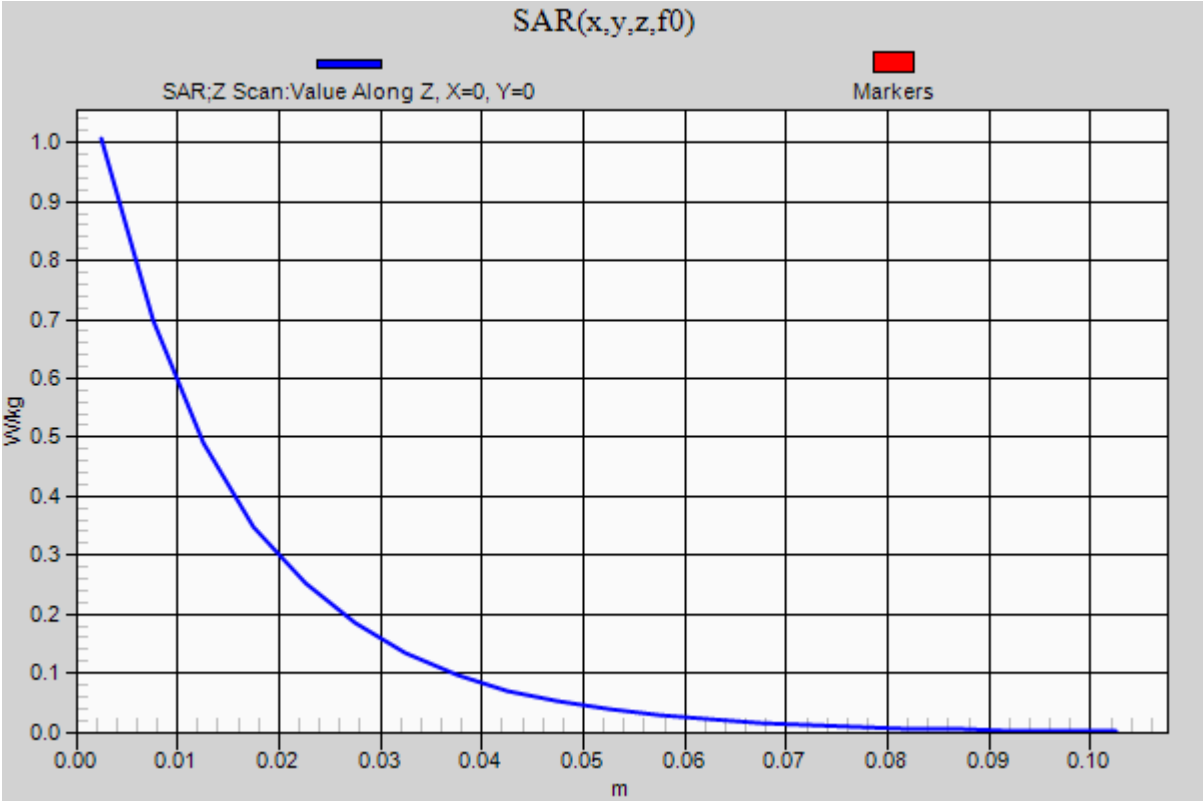

20130913 SystemPerformanceCheck-D1750V2 SN 1050

Frequency: 1750 MHz; Duty Cycle: 1:1; Room Ambient Temperature: 24.0°C; Liquid Temperature: 23.0°C
Medium parameters used: f = 1750 MHz; σ = 1.474 S/m; ε_r = 51.804; ρ = 1000 kg/m^3
DASY5 Configuration:
- Area Scan Setting: Find Secondary Maximum Within: 2.0 dB and with a peak SAR value greater than 0.0012W/kg
- Averaged Fast SAR: Polynomial fit
- Electronics: DAE4 Sn1377; Calibrated: 7/15/2013
- Probe: EX3DV4 - SN3902; ConvF(7.9, 7.9, 7.9); Calibrated: 7/12/2013;
- Sensor-Surface: 2.5mm (Mechanical Surface Detection)
- Phantom: ELI v5.0; Type: QDOVA002AA; Serial: TP:xxxx

Body/Pin=100 mW/Area Scan (61x61x1): Interpolated grid: dx=1.500 mm, dy=1.500 mm

Reference Value = 57.014 V/m; Power Drift = -0.02 dB
Fast SAR: SAR(1 g) = 3.73 W/kg; SAR(10 g) = 1.96 W/kg
Maximum value of SAR (interpolated) = 4.90 W/kg

Body/Pin=100 mW/Zoom Scan (7x7x7)/Cube 0: Measurement grid: dx=5mm, dy=5mm, dz=5mm

Reference Value = 57.014 V/m; Power Drift = -0.02 dB
Peak SAR (extrapolated) = 6.57 W/kg
SAR(1 g) = 3.72 W/kg; SAR(10 g) = 1.99 W/kg
Maximum value of SAR (measured) = 4.95 W/kg

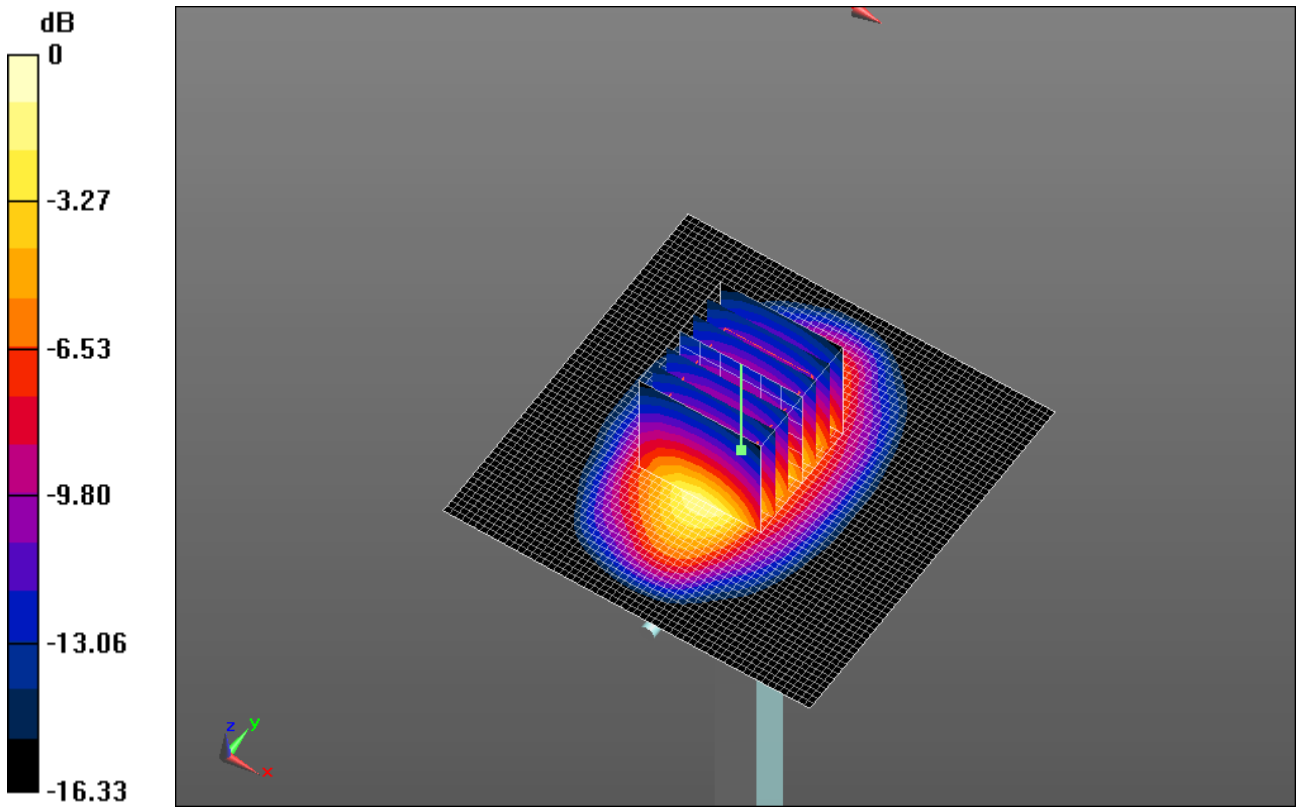

0 dB = 4.95 W/kg = 6.95 dBW/kg

20130913 SystemPerformanceCheck-D1750V2 SN 1050

Frequency: 1750 MHz; Duty Cycle: 1:1

Body/Pin=100 mW/Z Scan (1x1x21): Measurement grid: dx=20mm, dy=20mm, dz=5mm
Maximum value of SAR (measured) = 4.68 W/kg

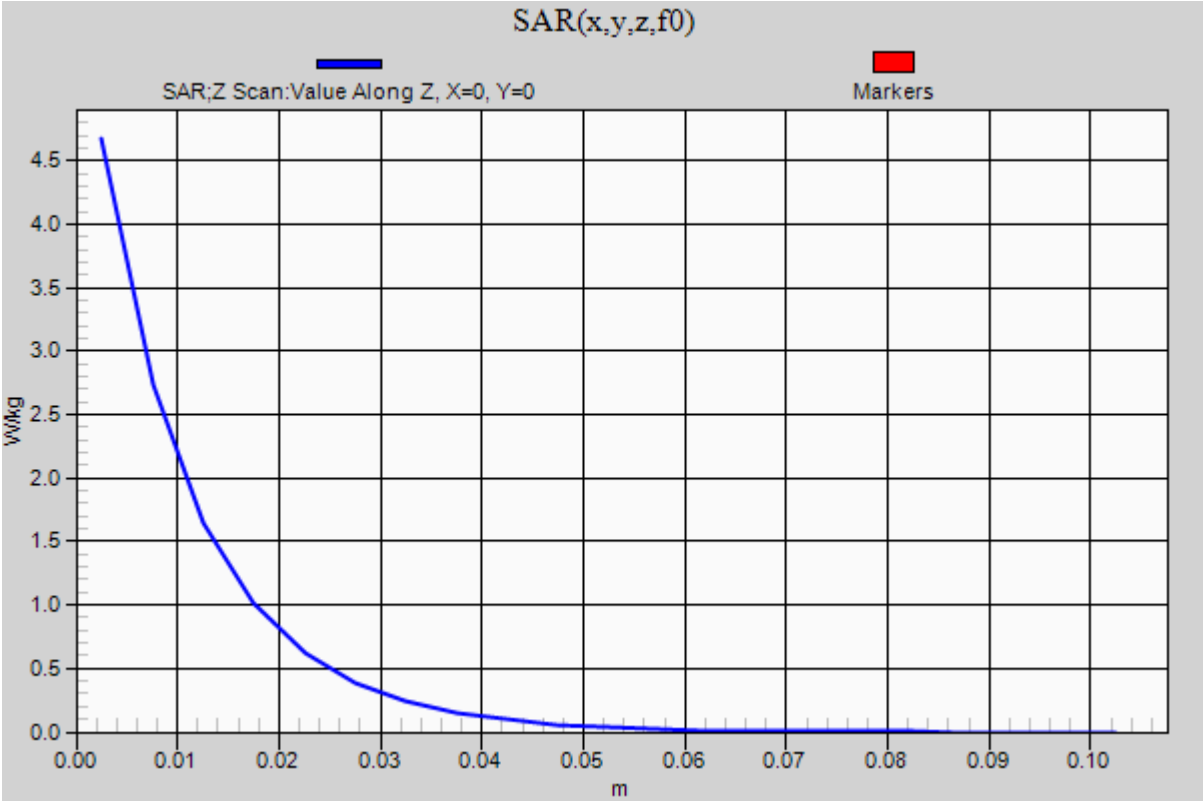

20130906_SystemPerformanceCheck-D1750V2 SN 1050

Frequency: 1750 MHz; Duty Cycle: 1:1; Room Ambient Temperature: 24.0°C; Liquid Temperature: 23.0°C
Medium parameters used: f = 1750 MHz; σ = 1.472 S/m; ε_r = 52.681; ρ = 1000 kg/m^3
DASY5 Configuration:
- Area Scan Setting: Find Secondary Maximum Within: 2.0 dB and with a peak SAR value greater than 0.0012W/kg
- Averaged Fast SAR: Polynomial fit
- Electronics: DAE4 Sn1380; Calibrated: 7/15/2013
- Probe: EX3DV4 - SN3936; ConvF(7.73, 7.73, 7.73); Calibrated: 7/22/2013;
- Sensor-Surface: 2.5mm (Mechanical Surface Detection)
- Phantom: ELI A (v5.0); Type: QDOVA002AA; Serial: TP:xxxx

Body/Pin=100 mW/Area Scan (61x61x1): Interpolated grid: dx=1.500 mm, dy=1.500 mm

Reference Value = 57.982 V/m; Power Drift = -0.02 dB
Fast SAR: SAR(1 g) = 3.79 W/kg; SAR(10 g) = 1.97 W/kg
Maximum value of SAR (interpolated) = 5.03 W/kg

Body/Pin=100 mW/Zoom Scan (7x7x7)/Cube 0: Measurement grid: dx=5mm, dy=5mm, dz=5mm

Reference Value = 57.982 V/m; Power Drift = -0.02 dB
Peak SAR (extrapolated) = 6.62 W/kg
SAR(1 g) = 3.75 W/kg; SAR(10 g) = 2.02 W/kg
Maximum value of SAR (measured) = 4.97 W/kg

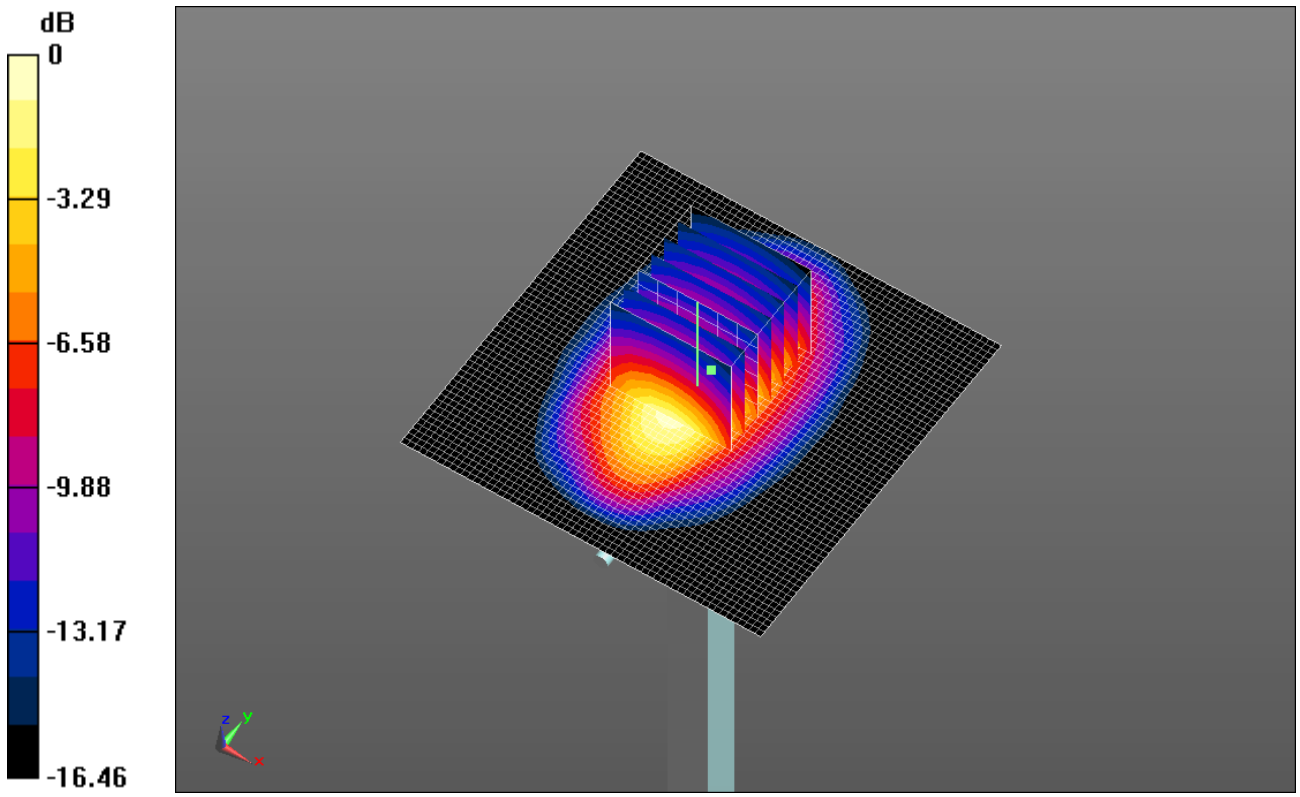

0 dB = 4.97 W/kg = 6.96 dBW/kg

20130906_SystemPerformanceCheck-D1750V2 SN 1050

Frequency: 1750 MHz; Duty Cycle: 1:1

Body/Pin=100 mW/Z Scan (1x1x21): Measurement grid: dx=20mm, dy=20mm, dz=5mm
Maximum value of SAR (measured) = 4.80 W/kg

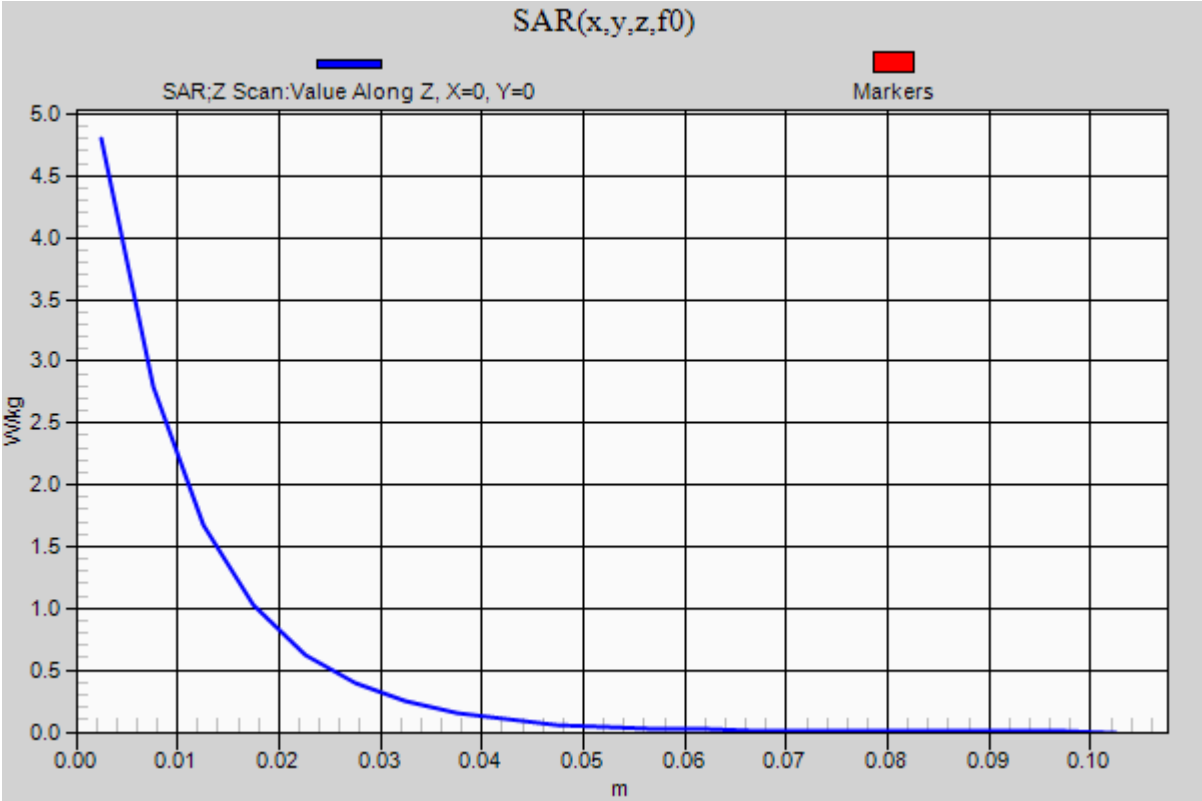

20130909_SystemPerformanceCheck-D835V2 SN 4d117

Frequency: 835 MHz; Duty Cycle: 1:1; Room Ambient Temperature: 24.0°C; Liquid Temperature: 23.0°C
Medium parameters used: f = 835 MHz; σ = 1.011 S/m; ε_r = 55.059; ρ = 1000 kg/m^3
DASY5 Configuration:
- Area Scan Setting: Find Secondary Maximum Within: 2.0 dB and with a peak SAR value greater than 0.0012W/kg
- Averaged Fast SAR: Polynomial fit
- Electronics: DAE4 Sn1380; Calibrated: 7/15/2013
- Probe: EX3DV4 - SN3936; ConvF(9.3, 9.3, 9.3); Calibrated: 7/22/2013;
- Sensor-Surface: 2.5mm (Mechanical Surface Detection)
- Phantom: ELI A (v5.0); Type: QDOVA002AA; Serial: TP:xxxx

Body/Pin=100 mW/Area Scan (61x61x1): Interpolated grid: dx=1.500 mm, dy=1.500 mm

Reference Value = 33.126 V/m; Power Drift = 0.02 dB
Fast SAR: SAR(1 g) = 0.994 W/kg; SAR(10 g) = 0.654 W/kg
Maximum value of SAR (interpolated) = 1.19 W/kg

Body/Pin=100 mW/Zoom Scan (7x7x7)/Cube 0: Measurement grid: dx=5mm, dy=5mm, dz=5mm

Reference Value = 33.126 V/m; Power Drift = 0.02 dB
Peak SAR (extrapolated) = 1.46 W/kg
SAR(1 g) = 0.986 W/kg; SAR(10 g) = 0.649 W/kg
Maximum value of SAR (measured) = 1.20 W/kg

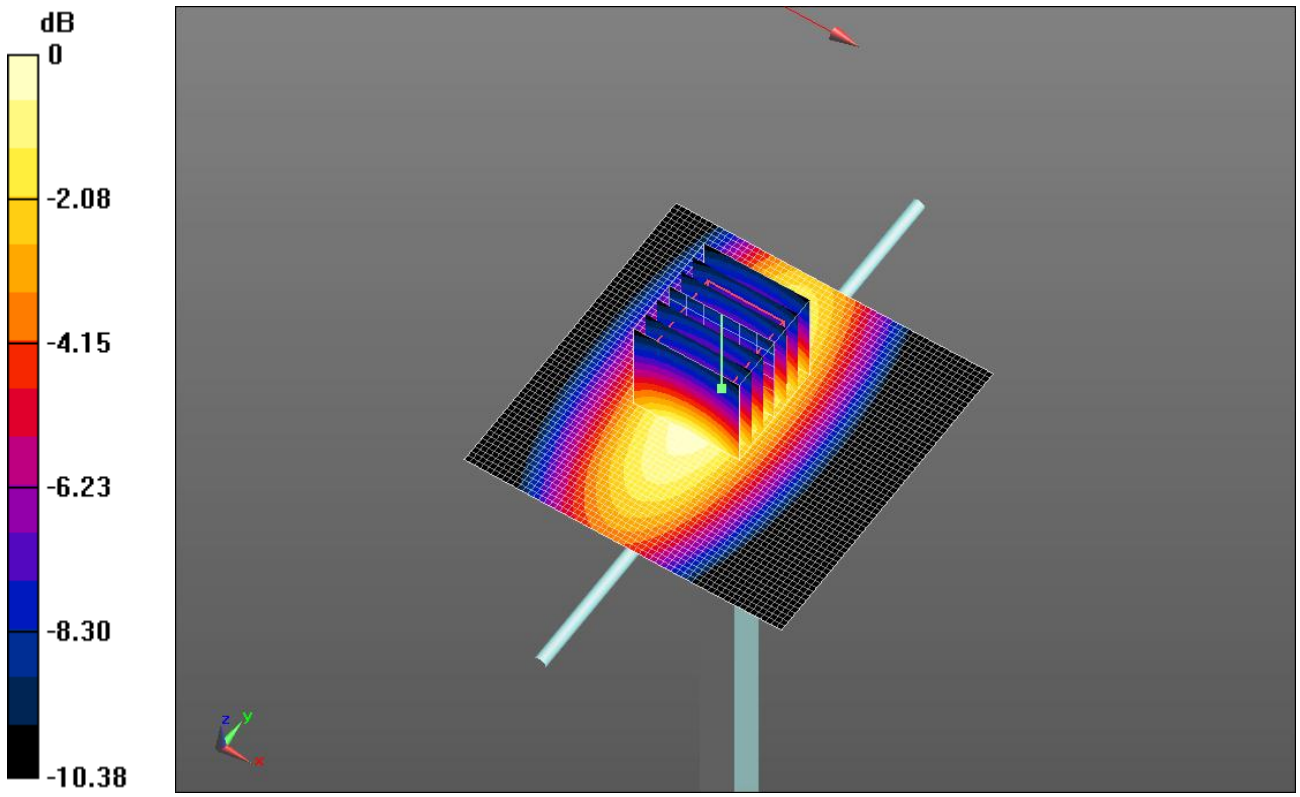

0 dB = 1.20 W/kg = 0.79 dBW/kg

20130909_SystemPerformanceCheck-D835V2 SN 4d117

Frequency: 835 MHz; Duty Cycle: 1:1

Body/Pin=100 mW/Z Scan (1x1x21): Measurement grid: dx=20mm, dy=20mm, dz=5mm
Maximum value of SAR (measured) = 1.08 W/kg

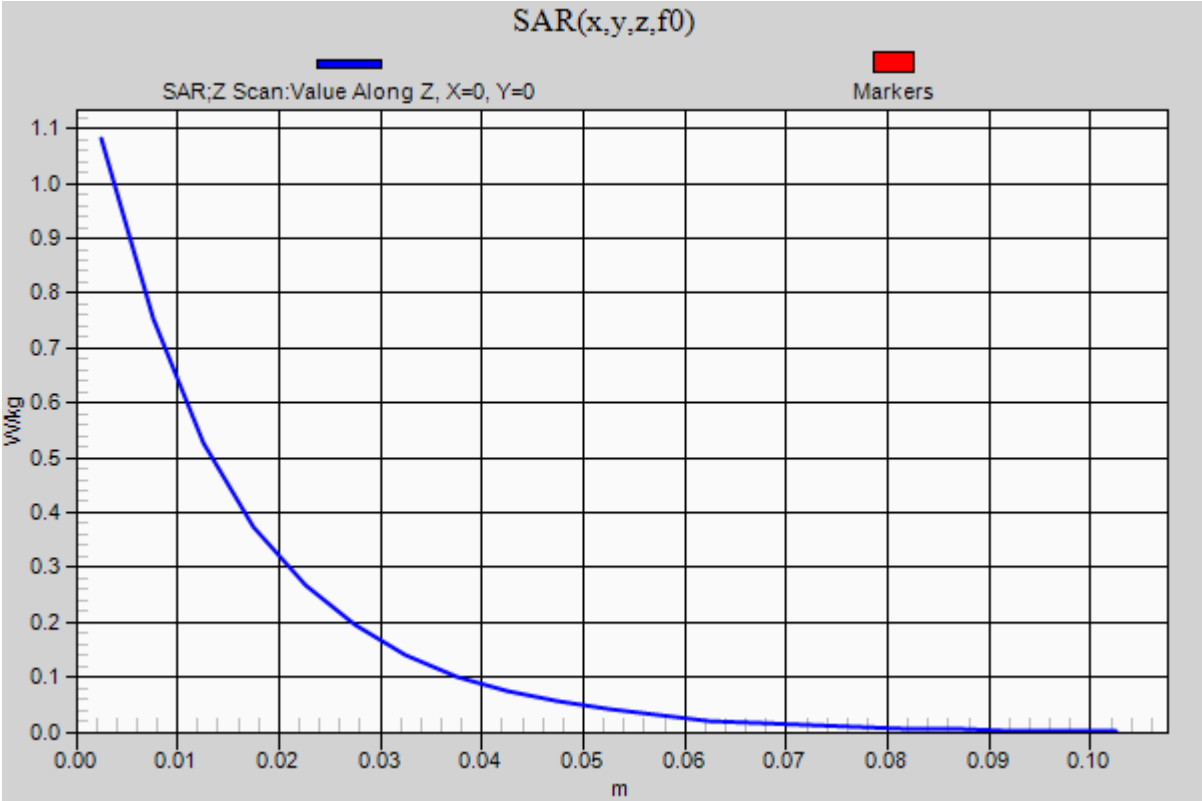

20130912_SystemPerformanceCheck-D750V3 SN 1019

Frequency: 750 MHz; Duty Cycle: 1:1; Room Ambient Temperature: 24.0°C; Liquid Temperature: 23.0°C
Medium parameters used: f = 750 MHz; σ = 0.967 S/m; ε_r = 54.579; ρ = 1000 kg/m^3
DASY5 Configuration:
- Area Scan Setting: Find Secondary Maximum Within: 2.0 dB and with a peak SAR value greater than 0.0012W/kg
- Electronics: DAE4 Sn1380; Calibrated: 7/15/2013
- Probe: EX3DV4 - SN3936; ConvF(9.5, 9.5, 9.5); Calibrated: 7/22/2013;
- Sensor-Surface: 2.5mm (Mechanical Surface Detection)
- Phantom: ELI A (v5.0); Type: QDOVA001BB; Serial: S/n:1212

Body/Pin=100 mW/Area Scan (61x61x1): Interpolated grid: dx=1.500 mm, dy=1.500 mm
Reference Value = 32.938 V/m; Power Drift = 0.02 dB
Fast SAR: SAR(1 g) = 0.922 W/kg; SAR(10 g) = 0.626 W/kg
Maximum value of SAR (interpolated) = 1.09 W/kg

Body/Pin=100 mW/Zoom Scan (7x7x7)/Cube 0: Measurement grid: dx=5mm, dy=5mm, dz=5mm
Reference Value = 32.938 V/m; Power Drift = 0.02 dB
Peak SAR (extrapolated) = 1.36 W/kg
SAR(1 g) = 0.906 W/kg; SAR(10 g) = 0.598 W/kg
Maximum value of SAR (measured) = 1.10 W/kg

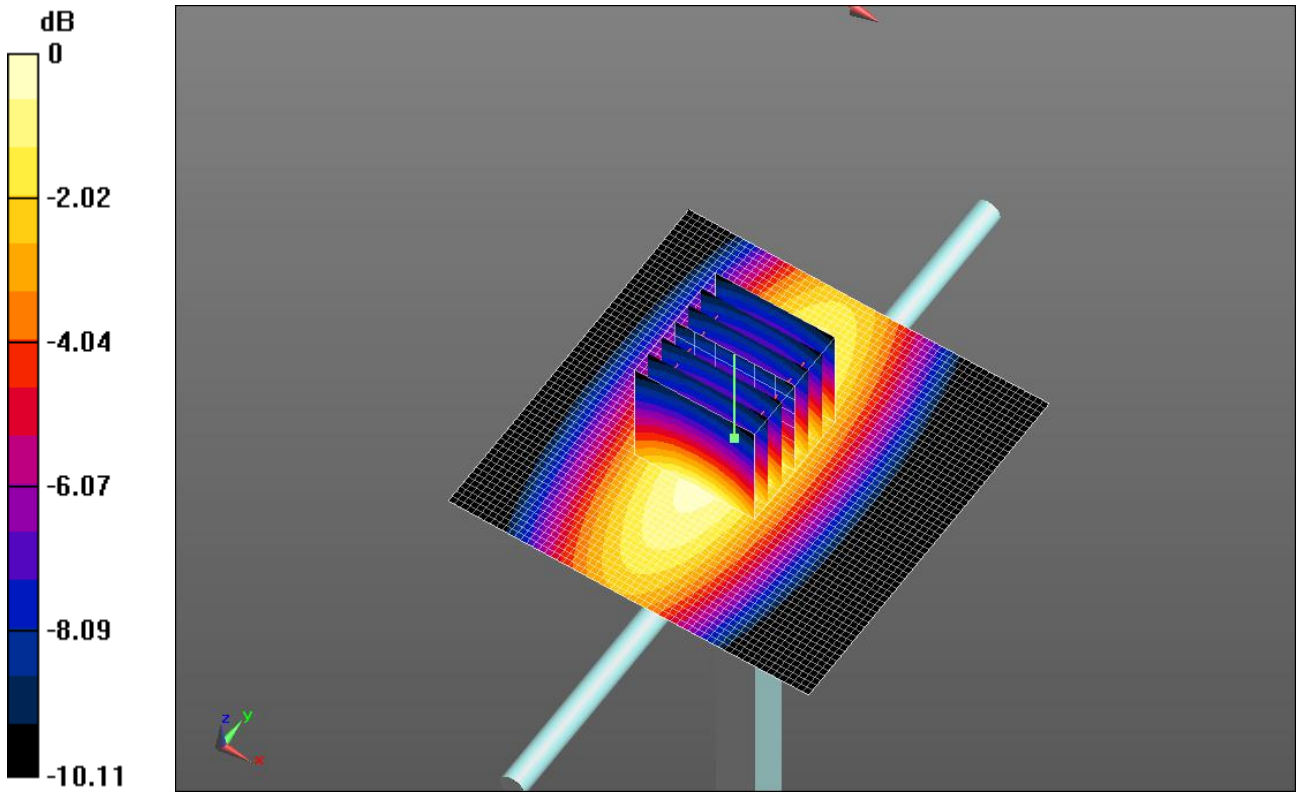

0 dB = 1.10 W/kg = 0.41 dBW/kg

20130912_SystemPerformanceCheck-D750V3 SN 1019

Frequency: 750 MHz; Duty Cycle: 1:1

Body/Pin=100 mW/Z Scan (1x1x21): Measurement grid: dx=20mm, dy=20mm, dz=5mm
Maximum value of SAR (measured) = 1.03 W/kg

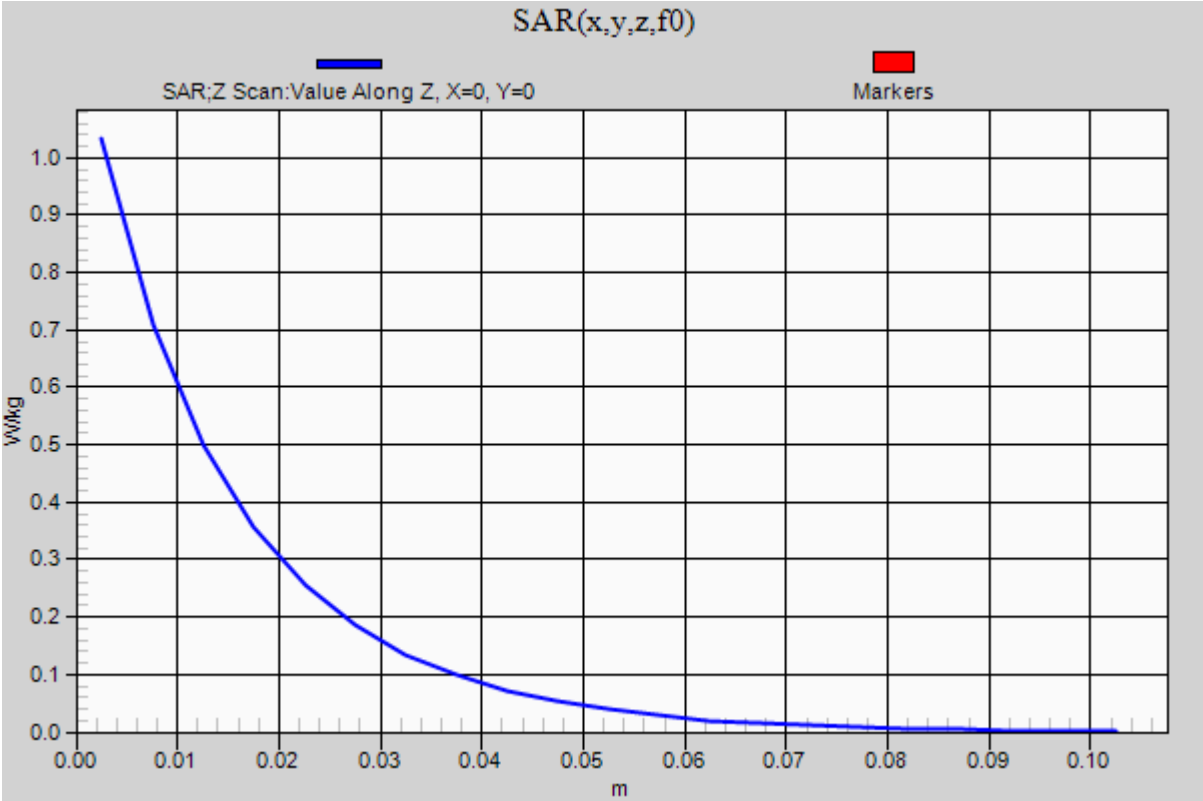

GSM 850

Frequency: 848.8 MHz; Duty Cycle: 1:4.00037; Room Ambient Temperature: 24.0°C; Liquid Temperature: 23.0°C
Medium parameters used (interpolated): f = 848.8 MHz; σ = 1.024 S/m; ε_r = 54.909; ρ = 1000 kg/m^3
DASY5 Configuration:
- Area Scan Setting: Find Secondary Maximum Within: 2.0 dB and with a peak SAR value greater than 0.0012W/kg
- Electronics: DAE4 Sn1380; Calibrated: 7/15/2013
- Probe: EX3DV4 - SN3936; ConvF(9.3, 9.3, 9.3); Calibrated: 7/22/2013;
- Sensor-Surface: 2.5mm (Mechanical Surface Detection (Locations From Previous Scan Used)), Sensor-Surface: 2.5mm (Mechanical Surface Detection)
- Phantom: ELI A (v5.0); Type: QDOVA002AA; Serial: TP:xxxx

Rear Edge 2 Slant_6 mm/GSM_GPRS 2 Slot_Ch 251/Area Scan (8x8x1): Measurement grid: dx=15mm, dy=15mm

Info: Interpolated medium parameters used for SAR evaluation.
Maximum value of SAR (measured) = 1.10 W/kg

Rear Edge 2 Slant_6 mm/GSM_GPRS 2 Slot_Ch 251/Zoom Scan (5x5x7)/Cube 0:

Measurement grid: dx=8mm, dy=8mm, dz=5mm
Reference Value = 33.040 V/m; Power Drift = -0.06 dB
Peak SAR (extrapolated) = 1.40 W/kg
SAR(1 g) = 0.850 W/kg; SAR(10 g) = 0.514 W/kg
Info: Interpolated medium parameters used for SAR evaluation.
Maximum value of SAR (measured) = 1.09 W/kg

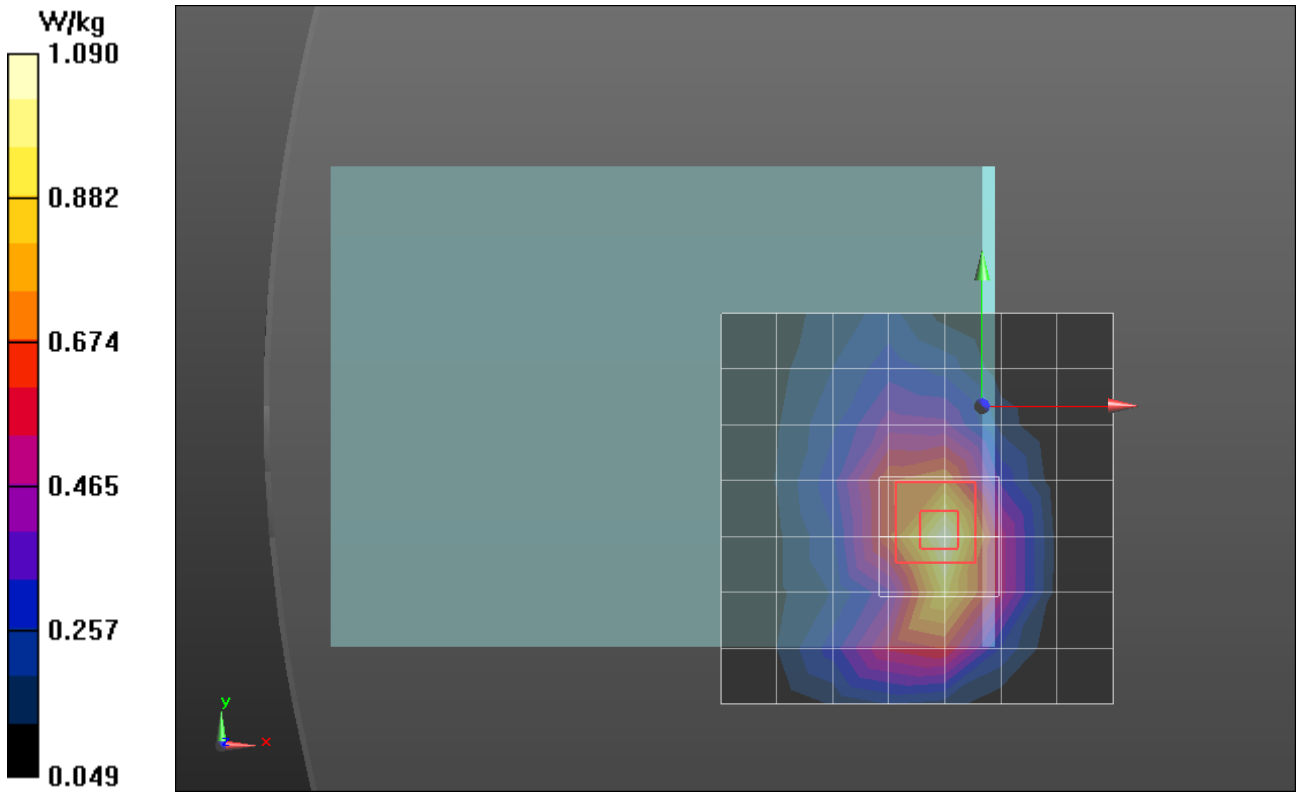

GSM 1900

Frequency: 1850.2 MHz; Duty Cycle: 1:4.00037; Room Ambient Temperature: 24.0°C; Liquid Temperature: 23.0°C
Medium parameters used (interpolated): f = 1850.2 MHz; σ = 1.456 S/m; ε_r = 52.696; ρ = 1000 kg/m^3
DASY5 Configuration:
- Area Scan Setting: Find Secondary Maximum Within: 2.0 dB and with a peak SAR value greater than 0.0012W/kg
- Electronics: DAE4 Sn1377; Calibrated: 7/15/2013
- Probe: EX3DV4 - SN3902; ConvF(7.61, 7.61, 7.61); Calibrated: 7/12/2013;
- Sensor-Surface: 2.5mm (Mechanical Surface Detection (Locations From Previous Scan Used)), Sensor-Surface: 2.5mm (Mechanical Surface Detection)
- Phantom: ELI v5.0; Type: QDOVA002AA; Serial: TP:xxxx

Rear Edge 2 Slant/GSM_GPRS 2 Slot_Ch 810 -6dBm/Area Scan (7x7x1): Measurement grid: dx=15mm, dy=15mm

Info: Interpolated medium parameters used for SAR evaluation.
Maximum value of SAR (measured) = 1.19 W/kg

Rear Edge 2 Slant/GSM_GPRS 2 Slot_Ch 810 -6dBm/Zoom Scan (5x5x7)/Cube 0:

Measurement grid: dx=8mm, dy=8mm, dz=5mm
Reference Value = 28.737 V/m; Power Drift = 0.06 dB
Peak SAR (extrapolated) = 1.88 W/kg
SAR(1 g) = 0.928 W/kg; SAR(10 g) = 0.453 W/kg
Info: Interpolated medium parameters used for SAR evaluation.
Maximum value of SAR (measured) = 1.27 W/kg

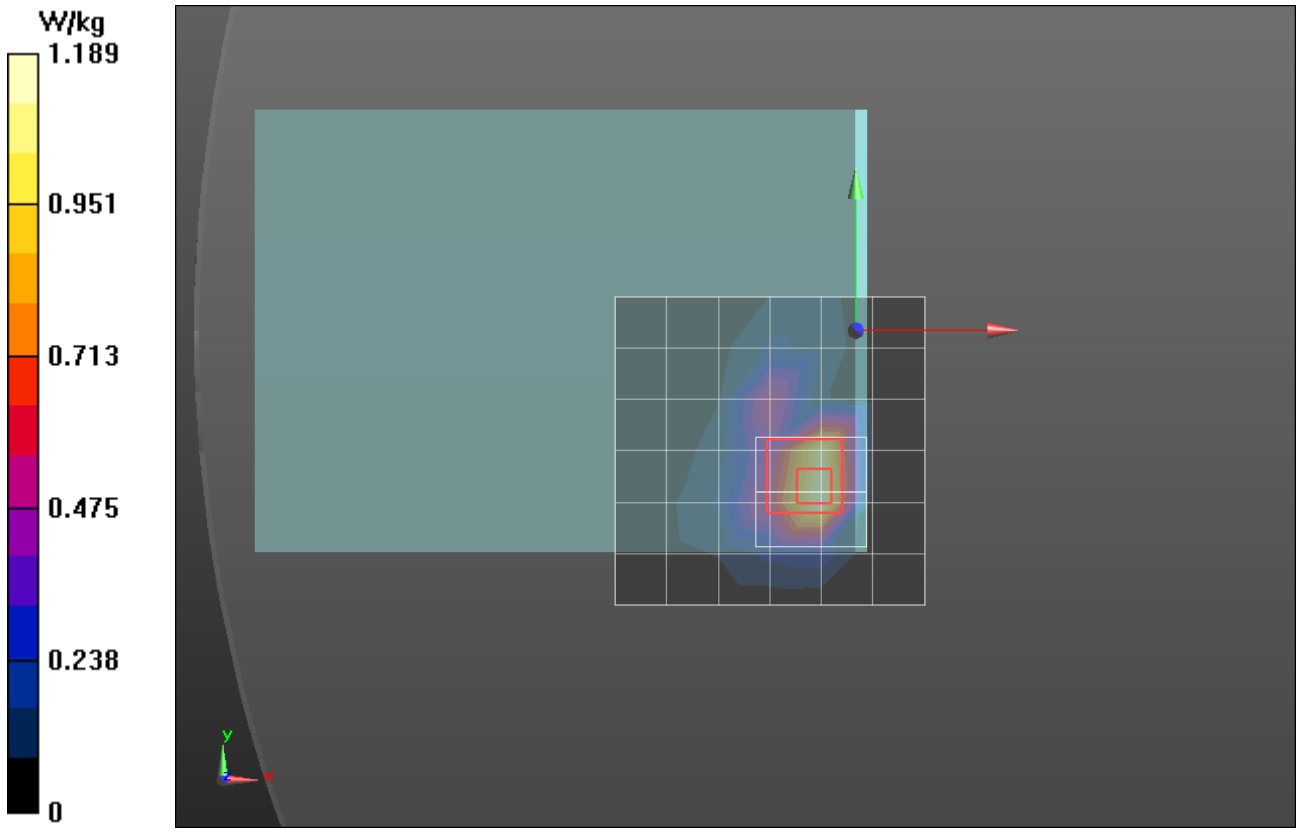

W-CDMA V

Frequency: 826.4 MHz; Duty Cycle: 1:1; Room Ambient Temperature: 24.0°C; Liquid Temperature: 23.0°C
Medium parameters used (interpolated): f = 826.4 MHz; σ = 1.002 S/m; ε_r = 55.141; ρ = 1000 kg/m^3
DASY5 Configuration:
- Area Scan Setting: Find Secondary Maximum Within: 2.0 dB and with a peak SAR value greater than 0.0012W/kg
- Electronics: DAE4 Sn1380; Calibrated: 7/15/2013
- Probe: EX3DV4 - SN3936; ConvF(9.3, 9.3, 9.3); Calibrated: 7/22/2013;
- Sensor-Surface: 2.5mm (Mechanical Surface Detection)
- Phantom: ELI A (v5.0); Type: QDOVA002AA; Serial: TP:xxxx

Rear Edge 2 Slant_0 mm/Rel 99_RMC_Ch 4132/Area Scan (6x7x1): Measurement grid: dx=15mm, dy=15mm

Info: Interpolated medium parameters used for SAR evaluation.
Maximum value of SAR (measured) = 1.16 W/kg

Rear Edge 2 Slant_0 mm/Rel 99_RMC_Ch 4132/Zoom Scan (5x5x7)/Cube 0: Measurement grid: dx=8mm, dy=8mm, dz=5mm

Reference Value = 34.135 V/m; Power Drift = 0.01 dB
Peak SAR (extrapolated) = 1.75 W/kg
SAR(1 g) = 0.884 W/kg; SAR(10 g) = 0.491 W/kg
Info: Interpolated medium parameters used for SAR evaluation.
Maximum value of SAR (measured) = 1.20 W/kg

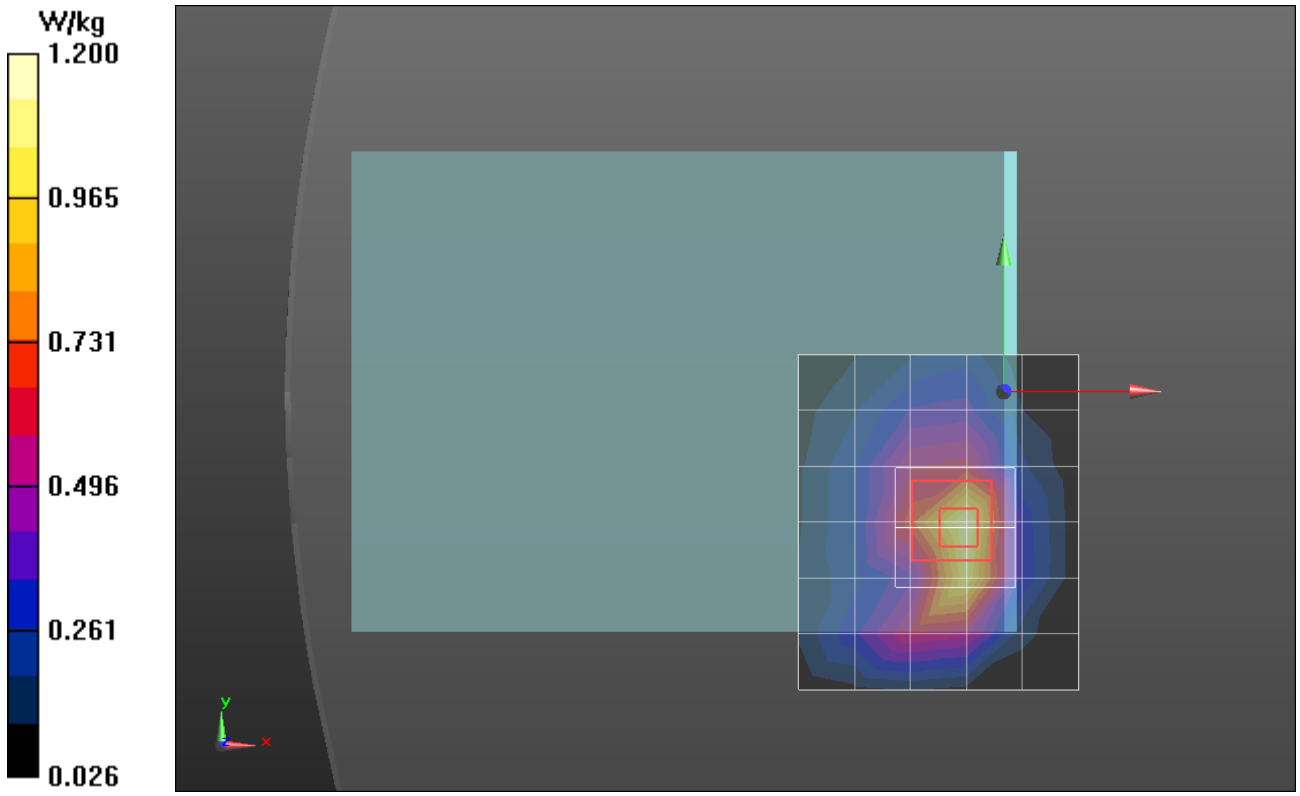

W-CDMA II ATT

Frequency: 1907.6 MHz; Duty Cycle: 1:1; Room Ambient Temperature: 24.0°C; Liquid Temperature: 23.0°C
Medium parameters used (interpolated): f = 1907.6 MHz; σ = 1.537 S/m; ε_r = 52.055; ρ = 1000 kg/m^3
DASY5 Configuration:
- Area Scan Setting: Find Secondary Maximum Within: 2.0 dB and with a peak SAR value greater than 0.0012W/kg
- Electronics: DAE4 Sn1377; Calibrated: 7/15/2013
- Probe: EX3DV4 - SN3902; ConvF(7.61, 7.61, 7.61); Calibrated: 7/12/2013;
- Sensor-Surface: 2.5mm (Mechanical Surface Detection)
- Phantom: ELI v5.0; Type: QDOVA002AA; Serial: TP:xxxx

Rear Edge 2 Slant/Rel. 99_RMC_Ch 9538_6mm/Area Scan (7x7x1): Measurement grid: dx=15mm, dy=15mm

Info: Interpolated medium parameters used for SAR evaluation.
Maximum value of SAR (measured) = 1.19 W/kg

Rear Edge 2 Slant/Rel. 99_RMC_Ch 9538_6mm/Zoom Scan (5x5x7)/Cube 0: Measurement grid: dx=8mm, dy=8mm, dz=5mm

Reference Value = 28.062 V/m; Power Drift = 0.04 dB
Peak SAR (extrapolated) = 1.85 W/kg
SAR(1 g) = 1.05 W/kg; SAR(10 g) = 0.603 W/kg
Info: Interpolated medium parameters used for SAR evaluation.
Maximum value of SAR (measured) = 1.37 W/kg

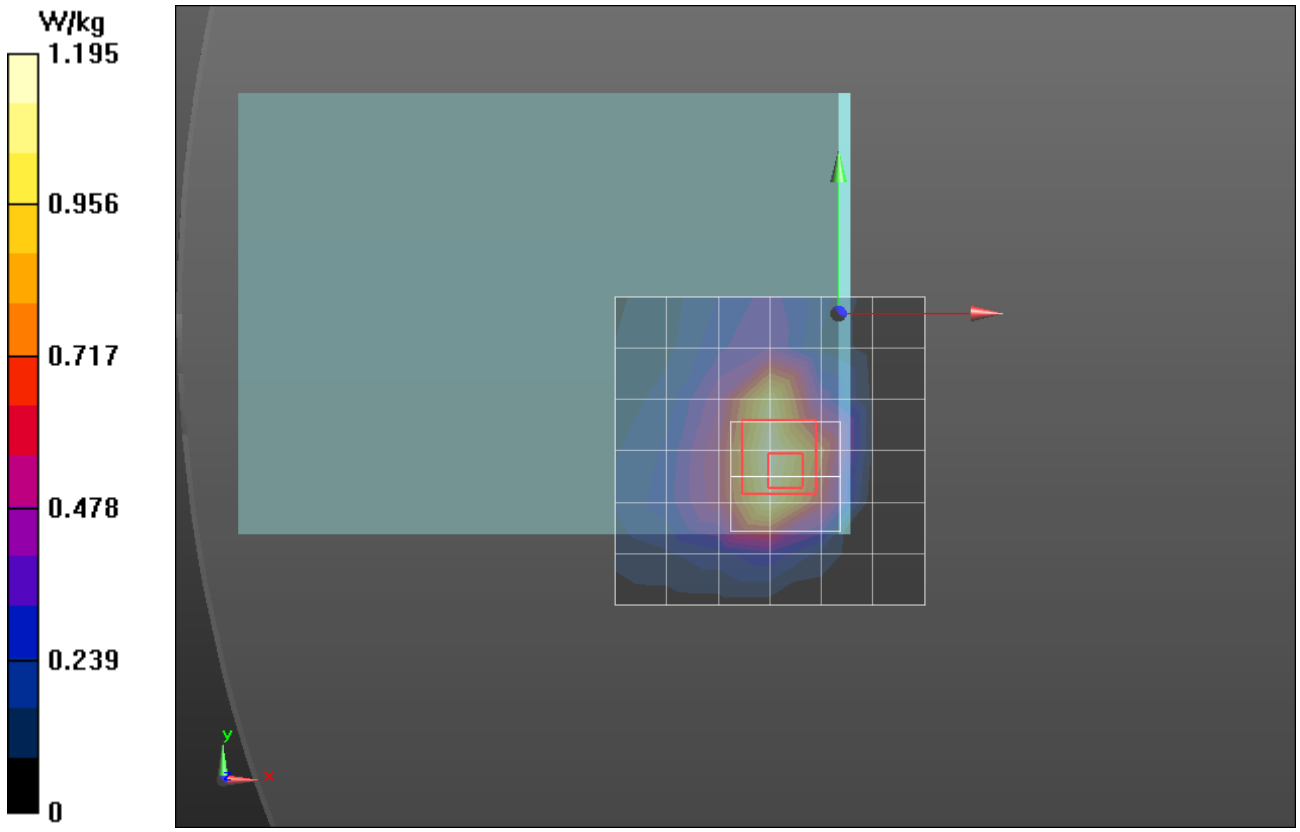

LTE Band 4

Frequency: 1745 MHz; Duty Cycle: 1:1; Room Ambient Temperature: 24.0°C; Liquid Temperature: 23.0°C
Medium parameters used: f = 1745 MHz; σ = 1.468 S/m; ε_r = 52.71; ρ = 1000 kg/m^3
DASY5 Configuration:
- Area Scan Setting: Find Secondary Maximum Within: 2.0 dB and with a peak SAR value greater than 0.0012W/kg
- Electronics: DAE4 Sn1380; Calibrated: 7/15/2013
- Probe: EX3DV4 - SN3936; ConvF(7.73, 7.73, 7.73); Calibrated: 7/22/2013;
- Sensor-Surface: 2.5mm (Mechanical Surface Detection)
- Phantom: ELI A (v5.0); Type: QDOVA002AA; Serial: TP:xxxx

Rear Edge 1 Slant/QPSK_RB 1/0_Ch 20300 -8dBm/Area Scan (6x7x1): Measurement grid: dx=15mm, dy=15mm

Maximum value of SAR (measured) = 1.32 W/kg

Rear Edge 1 Slant/QPSK_RB 1/0_Ch 20300 -8dBm/Zoom Scan (5x5x7)/Cube 0:

Measurement grid: dx=8mm, dy=8mm, dz=5mm
Reference Value = 30.206 V/m; Power Drift = 0.04 dB
Peak SAR (extrapolated) = 1.97 W/kg
SAR(1 g) = 1.09 W/kg; SAR(10 g) = 0.546 W/kg
Maximum value of SAR (measured) = 1.52 W/kg

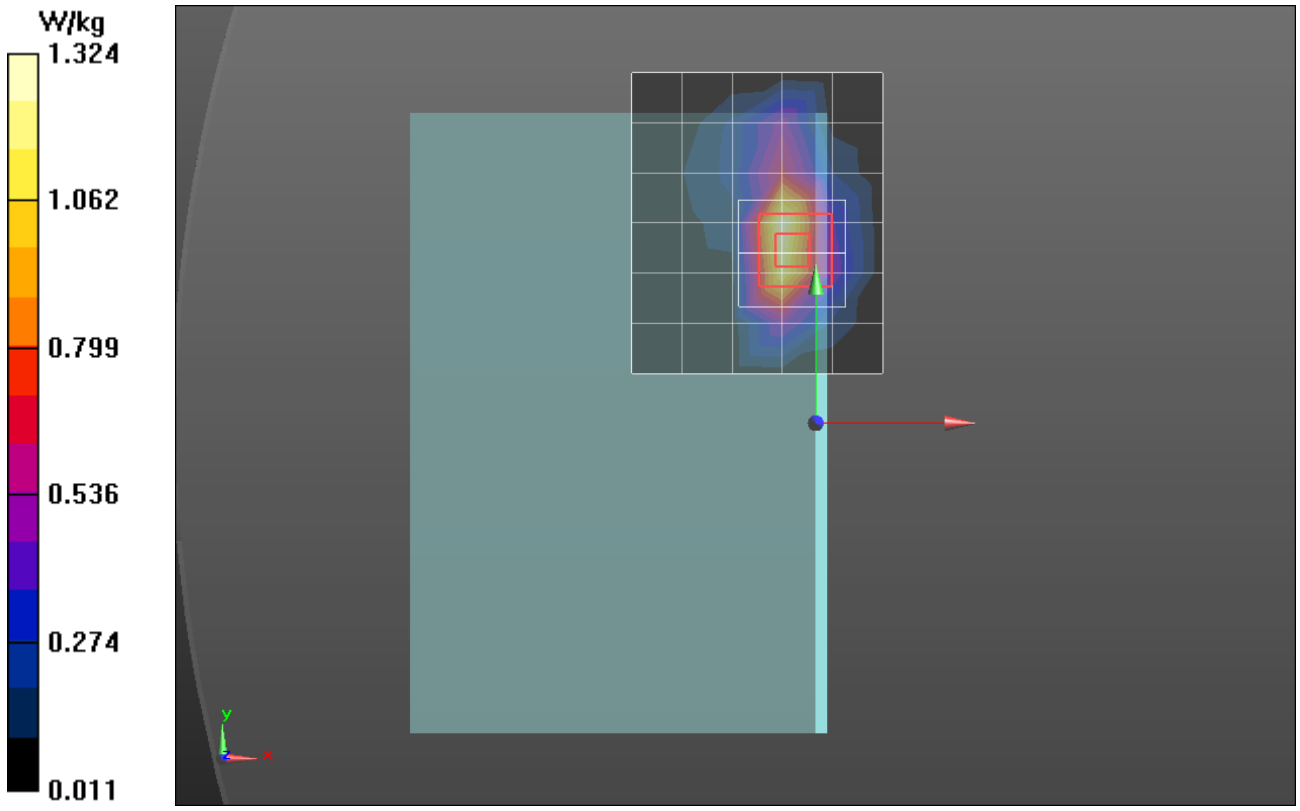

LTE Band 17

Frequency: 710 MHz; Duty Cycle: 1:1; Room Ambient Temperature: 24.0°C; Liquid Temperature: 23.0°C
Medium parameters used: f = 710 MHz; σ = 0.931 S/m; ε_r = 55.044; ρ = 1000 kg/m^3
DASY5 Configuration:
- Area Scan Setting: Find Secondary Maximum Within: 2.0 dB and with a peak SAR value greater than 0.0012W/kg
- Electronics: DAE4 Sn1377; Calibrated: 7/15/2013
- Probe: EX3DV4 - SN3902; ConvF(10.15, 10.15, 10.15); Calibrated: 7/12/2013;
- Sensor-Surface: 2.5mm (Mechanical Surface Detection)
- Phantom: ELI v5.0; Type: QDOVA002AA; Serial: TP:xxxx

Rear Edge 2 Slant/QPSK_RB 1/49 _Ch 23790/Area Scan (7x6x1): Measurement grid: dx=15mm, dy=15mm

Maximum value of SAR (measured) = 1.25 W/kg

Rear Edge 2 Slant/QPSK_RB 1/49 _Ch 23790/Zoom Scan (5x5x7)/Cube 0: Measurement grid: dx=8mm, dy=8mm, dz=5mm

Reference Value = 37.060 V/m; Power Drift = 0.03 dB
Peak SAR (extrapolated) = 1.98 W/kg
SAR(1 g) = 1.08 W/kg; SAR(10 g) = 0.619 W/kg
Maximum value of SAR (measured) = 1.39 W/kg

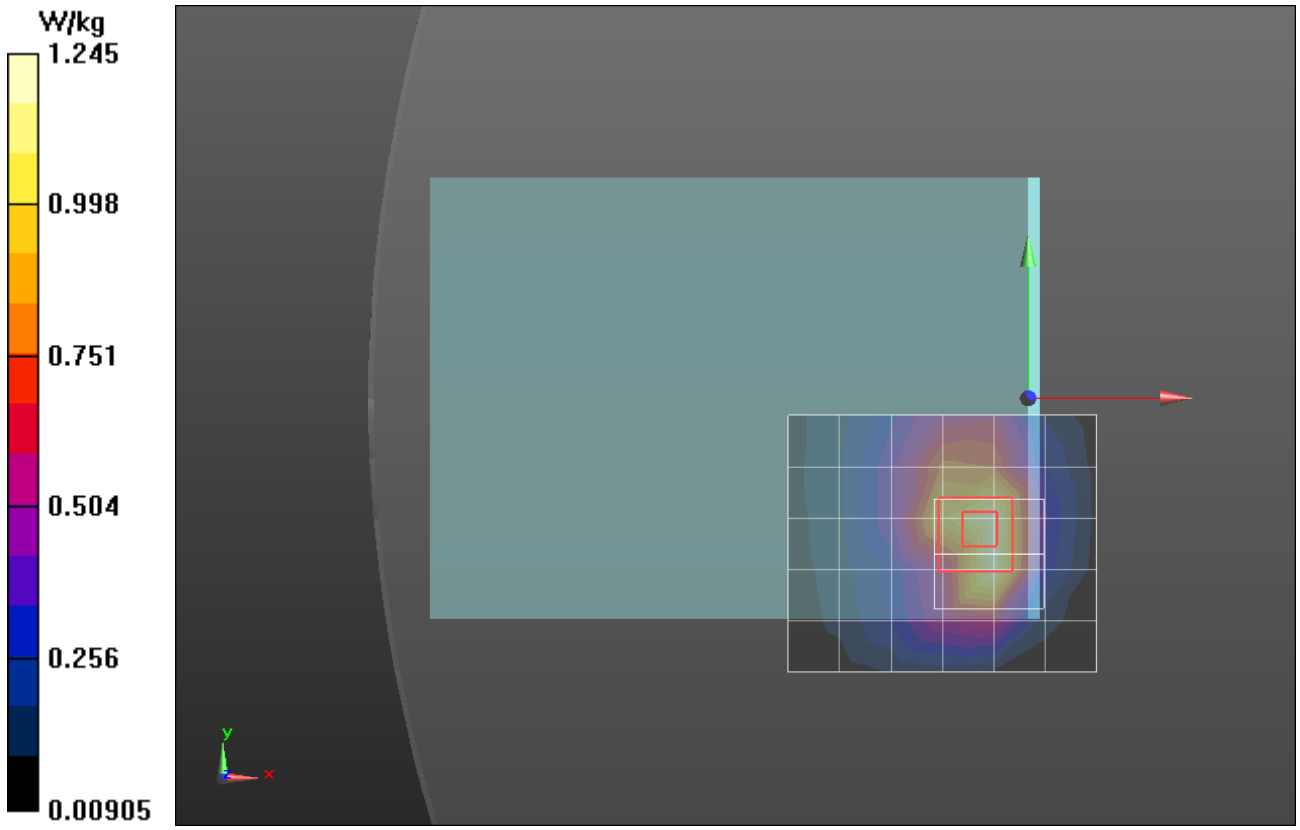

2.4GHz

Frequency: 2462 MHz; Duty Cycle: 1:1; Room Ambient Temperature: 24.0°C; Liquid Temperature: 23.0°C
Medium parameters used (interpolated): f = 2462 MHz; σ = 1.928 S/m; ε_r = 51.745; ρ = 1000 kg/m^3
DASY5 Configuration:
- Area Scan Setting: Find Secondary Maximum Within: 2.0 dB and with a peak SAR value greater than 0.0012W/kg
- Electronics: DAE4 Sn1259; Calibrated: 2/7/2013
- Probe: EX3DV4 - SN3929; ConvF(6.66, 6.66, 6.66); Calibrated: 6/24/2013;
- Sensor-Surface: 2.5mm (Mechanical Surface Detection (Locations From Previous Scan Used)), Sensor-Surface: 2.5mm (Mechanical Surface Detection)
- Phantom: ELI-B v5.0; Type: QDOVA002AA; Serial: TP:1195

Rear Edge 3 slant/802.11b_WiFi 2_ch 11/Area Scan (9x10x1): Measurement grid: dx=12mm, dy=12mm
Maximum value of SAR (measured) = 1.53 W/kg

Rear Edge 3 slant/802.11b_WiFi 2_ch 11/Zoom Scan (7x7x7)/Cube 0: Measurement grid: dx=5mm, dy=5mm, dz=5mm
Reference Value = 28.225 V/m; Power Drift = -0.08 dB
Peak SAR (extrapolated) = 2.99 W/kg
SAR(1 g) = 1.1 W/kg; SAR(10 g) = 0.422 W/kg
Maximum value of SAR (measured) = 1.69 W/kg

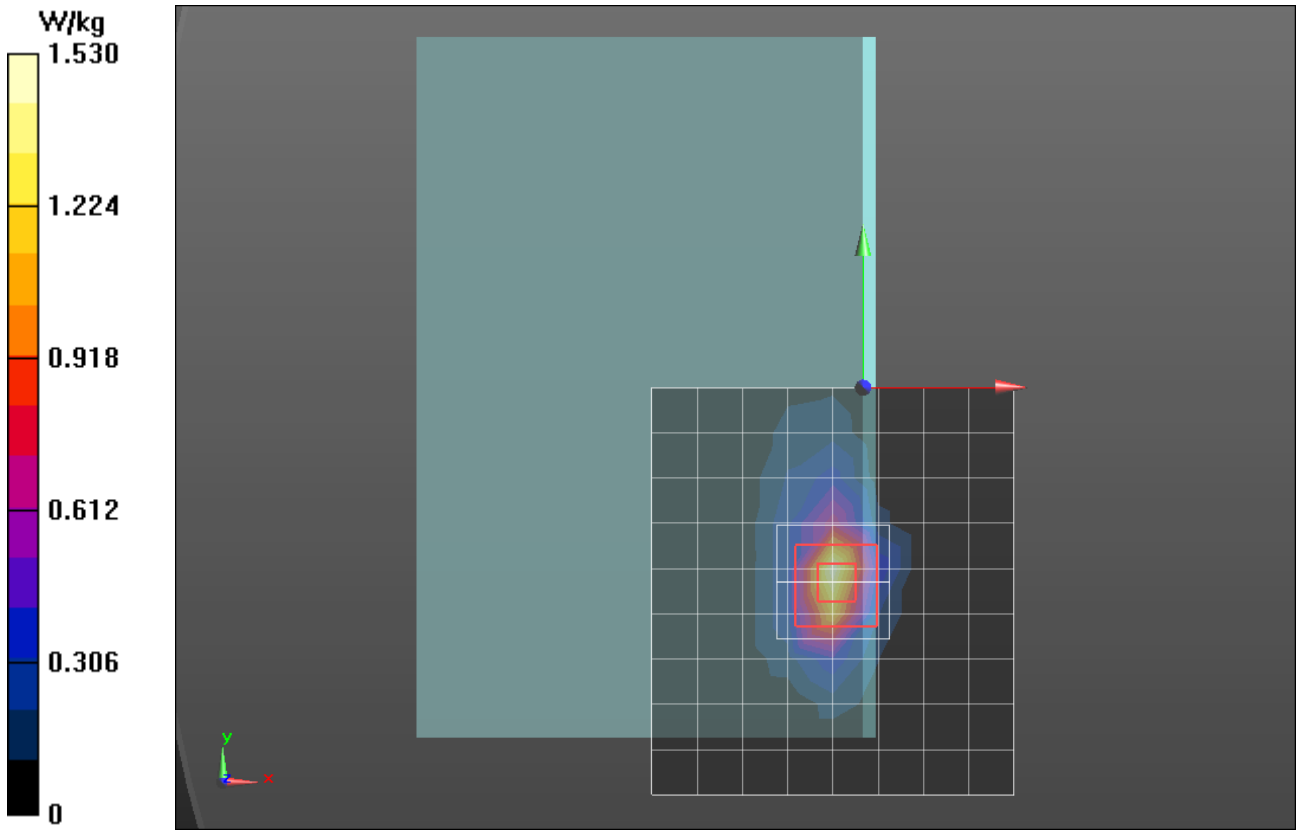

WiFi 5 GHz WiFi 2

Frequency: 5745 MHz; Duty Cycle: 1:1; Room Ambient Temperature: 24.0°C; Liquid Temperature: 23.0°C
Medium parameters used: f = 5745 MHz; σ = 6.008 S/m; ε_r = 46.412; ρ = 1000 kg/m^3
DASY5 Configuration:
- Area Scan Setting: Find Secondary Maximum Within: 2.0 dB and with a peak SAR value greater than 0.0012W/kg
- Electronics: DAE4 Sn1359; Calibrated: 2/8/2013
- Probe: EX3DV4 - SN3773; ConvF(4.05, 4.05, 4.05); Calibrated: 4/26/2013;
- Sensor-Surface: 2mm (Mechanical Surface Detection)
- Phantom: ELI v5.0; Type: QDOVA002AA; Serial: TP:1198

Rear Edge 3 Slant_802.11a_WiFi 2_Ch 149/Area Scan (7x8x1): Measurement grid: dx=10mm, dy=10mm
Maximum value of SAR (measured) = 1.94 W/kg

Rear Edge 3 Slant_802.11a_WiFi 2_Ch 149/Zoom Scan (7x7x12)/Cube 0: Measurement grid: dx=4mm, dy=4mm, dz=2mm
Reference Value = 17.271 V/m; Power Drift = 0.13 dB
Peak SAR (extrapolated) = 7.19 W/kg
SAR(1 g) = 1.08 W/kg; SAR(10 g) = 0.260 W/kg
Maximum value of SAR (measured) = 2.57 W/kg

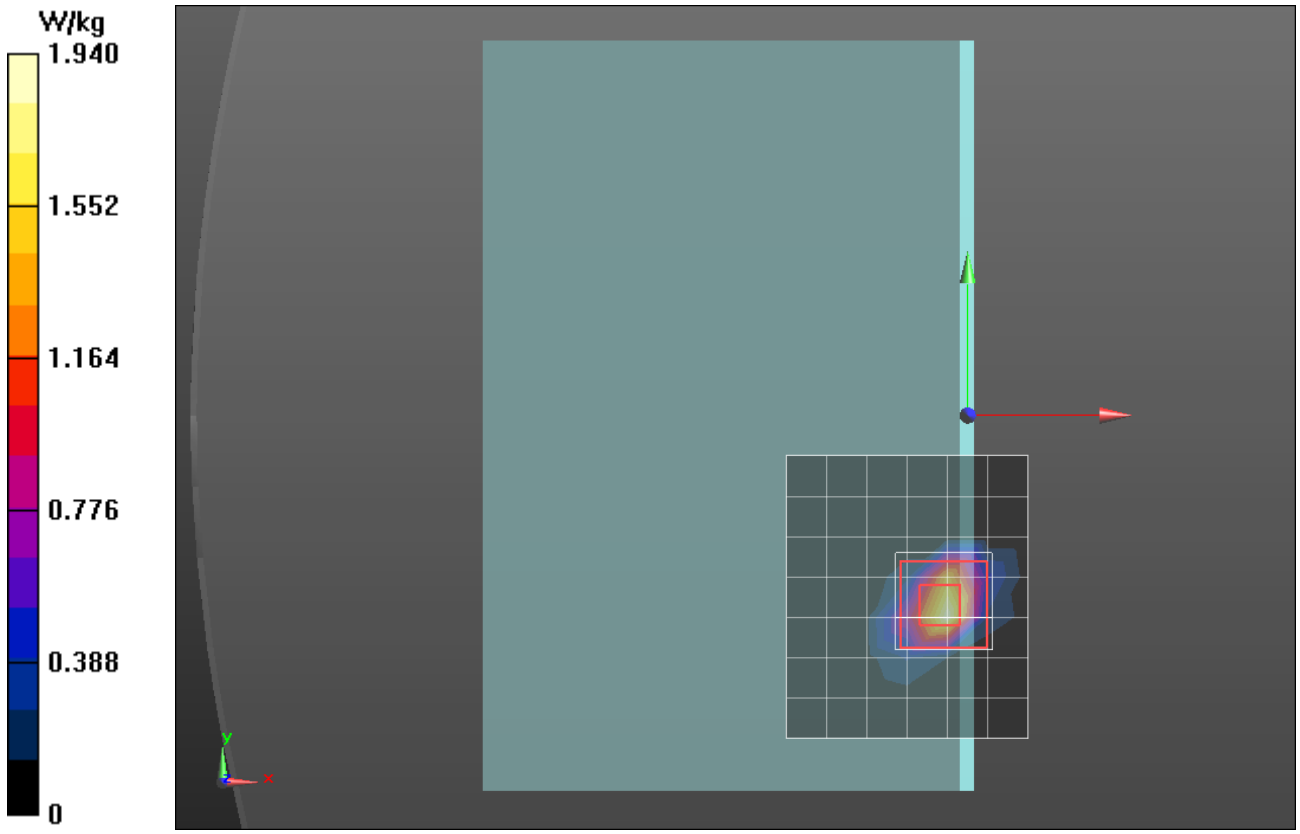

WiFi 5 GHz WiFi 2

Frequency: 5180 MHz; Duty Cycle: 1:1; Room Ambient Temperature: 24.0°C; Liquid Temperature: 23.0°C
Medium parameters used: f = 5180 MHz; σ = 5.103 S/m; ε_r = 48.386; ρ = 1000 kg/m^3
DASY5 Configuration:
- Area Scan Setting: Find Secondary Maximum Within: 2.0 dB and with a peak SAR value greater than 0.0012W/kg
- Electronics: DAE4 Sn1359; Calibrated: 2/8/2013
- Probe: EX3DV4 - SN3773; ConvF(4.39, 4.39, 4.39); Calibrated: 4/26/2013;
- Sensor-Surface: 2mm (Mechanical Surface Detection)
- Phantom: ELI v5.0; Type: QDOVA002AA; Serial: TP:1198

Rear Edge 3 Slant/802.11a_ WiFi 2_Ch 36/Area Scan (7x8x1): Measurement grid: dx=10mm, dy=10mm
Maximum value of SAR (measured) = 2.31 W/kg

Rear Edge 3 Slant/802.11a_ WiFi 2_Ch 36/Zoom Scan (7x7x12)/Cube 0: Measurement grid: dx=4mm, dy=4mm, dz=2mm
Reference Value = 20.463 V/m; Power Drift = 0.04 dB
Peak SAR (extrapolated) = 5.58 W/kg
SAR(1 g) = 1.16 W/kg; SAR(10 g) = 0.313 W/kg
Maximum value of SAR (measured) = 2.66 W/kg

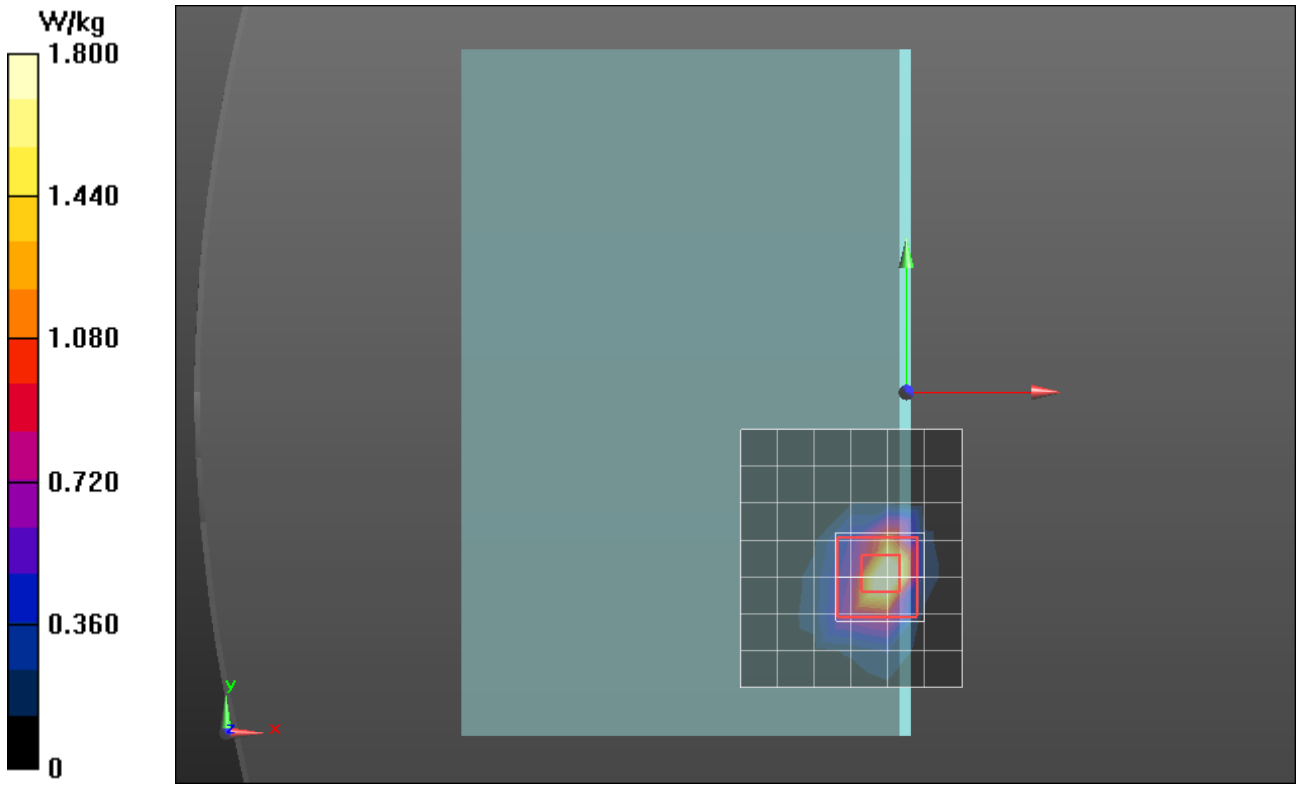

WiFi 5 GHz WiFi 2

Frequency: 5320 MHz; Duty Cycle: 1:1; Room Ambient Temperature: 24.0°C; Liquid Temperature: 23.0°C
Medium parameters used: f = 5320 MHz; σ = 5.412 S/m; ε_r = 47.236; ρ = 1000 kg/m^3
DASY5 Configuration:
- Area Scan Setting: Find Secondary Maximum Within: 2.0 dB and with a peak SAR value greater than 0.0012W/kg
- Electronics: DAE4 Sn1359; Calibrated: 2/8/2013
- Probe: EX3DV4 - SN3773; ConvF(4.13, 4.13, 4.13); Calibrated: 4/26/2013;
- Sensor-Surface: 2mm (Mechanical Surface Detection)
- Phantom: ELI v5.0; Type: QDOVA002AA; Serial: TP:1198

Rear Edge 3 Slant/802.11a_ WiFi 2_Ch 64 /Area Scan (7x8x1): Measurement grid: dx=10mm, dy=10mm
Maximum value of SAR (measured) = 2.24 W/kg

Rear Edge 3 Slant/802.11a_ WiFi 2_Ch 64 /Zoom Scan (7x7x12)/Cube 0: Measurement grid: dx=4mm, dy=4mm, dz=2mm
Reference Value = 19.914 V/m; Power Drift = 0.07 dB
Peak SAR (extrapolated) = 5.89 W/kg
SAR(1 g) = 1.12 W/kg; SAR(10 g) = 0.270 W/kg
Maximum value of SAR (measured) = 2.49 W/kg

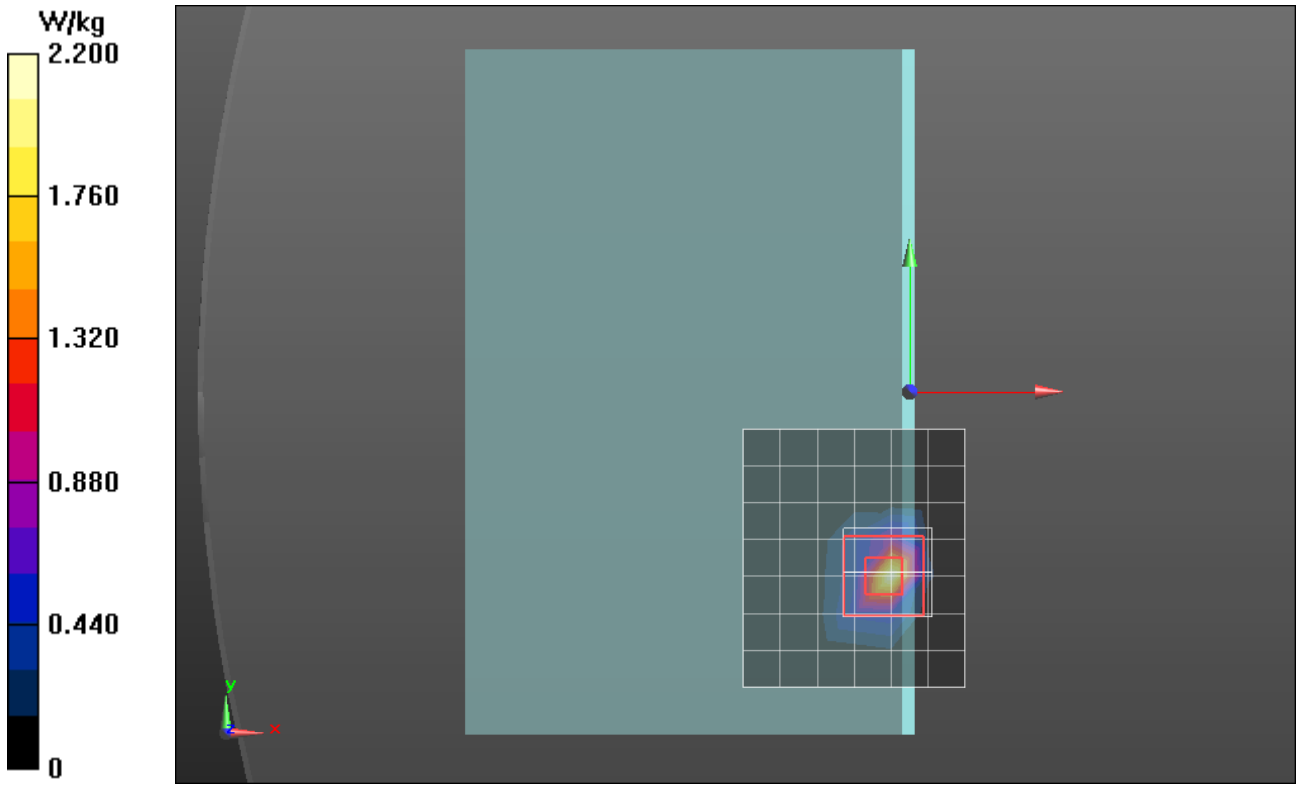

WiFi 5 GHz WiFi 2 Repeated

Frequency: 5680 MHz; Duty Cycle: 1:1; Room Ambient Temperature: 24.0°C; Liquid Temperature: 23.0°C
Medium parameters used: f = 5680 MHz; σ = 6.117 S/m; ε_r = 47.024; ρ = 1000 kg/m^3
DASY5 Configuration:
- Area Scan Setting: Find Secondary Maximum Within: 2.0 dB and with a peak SAR value greater than 0.0012W/kg
- Electronics: DAE4 Sn1259; Calibrated: 2/7/2013
- Probe: EX3DV4 - SN3929; ConvF(3.62, 3.62, 3.62); Calibrated: 6/24/2013;
- Sensor-Surface: 2mm (Mechanical Surface Detection (Locations From Previous Scan Used)), Sensor-Surface: 2mm (Mechanical Surface Detection)
- Phantom: ELI-A v5.0; Type: QDOVA002AA; Serial: TP 1194

Rear Edge 3 Slant/802.11a_Ch 136 (7x8x1): Measurement grid: dx=10mm, dy=10mm
Maximum value of SAR (measured) = 2.07 W/kg
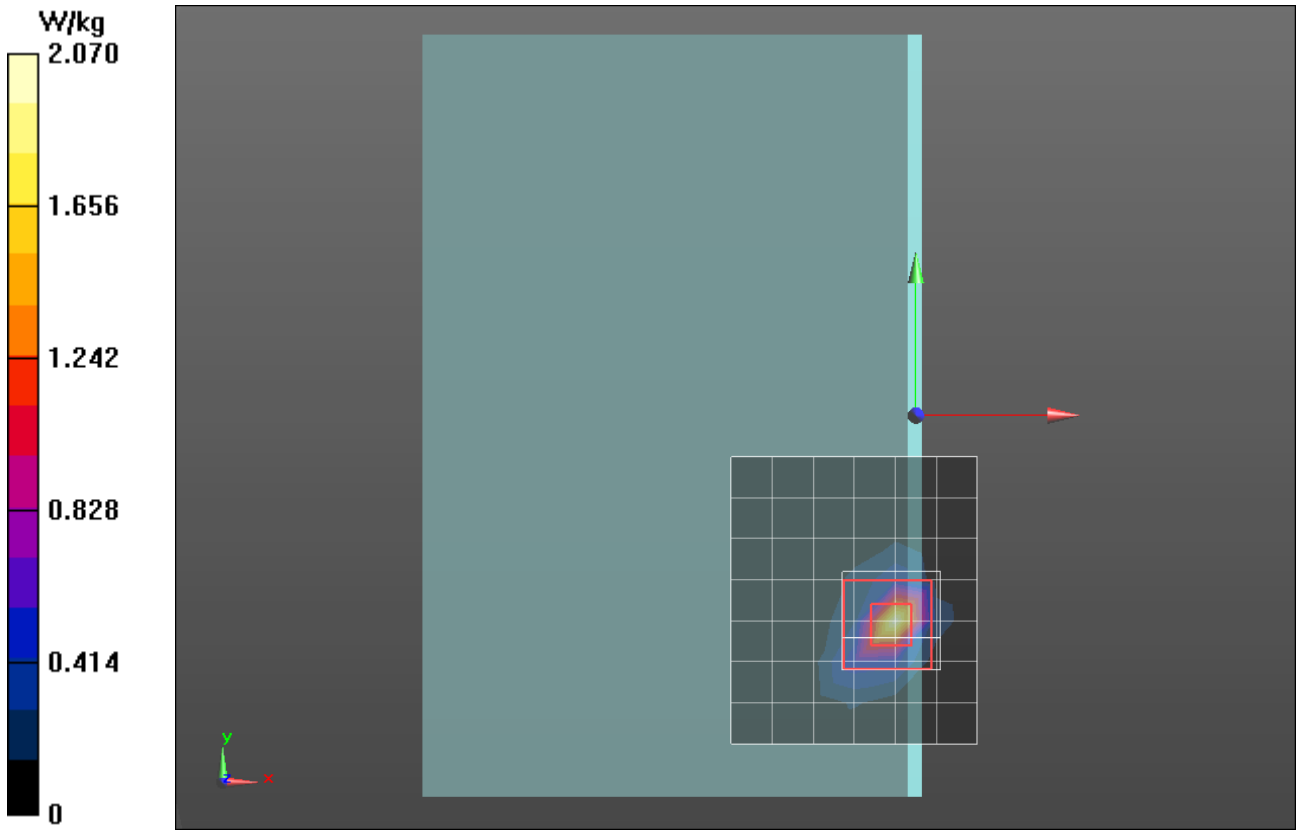
Rear Edge 3 Slant/802.11a_Ch 136/Zoom Scan (7x7x12)/Cube 0: Measurement grid: dx=4mm, dy=4mm, dz=2mm
Reference Value = 19.904 V/m; Power Drift = 0.14 dB
Peak SAR (extrapolated) = 6.31 W/kg
SAR(1 g) = 1.11 W/kg; SAR(10 g) = 0.262 W/kg
Maximum value of SAR (measured) = 2.57 W/kg