10.0 REMOTE CONTROL OPERATION GUIDE

All of the following operations on this manual takes MODE 2 for example.

10.1 Pairing

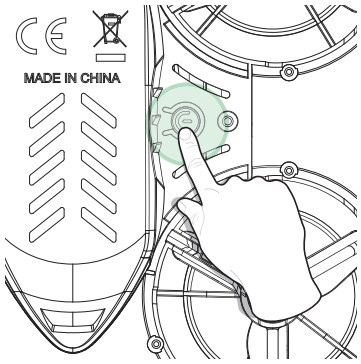

① Short press the Power Switch to turn on the drone.

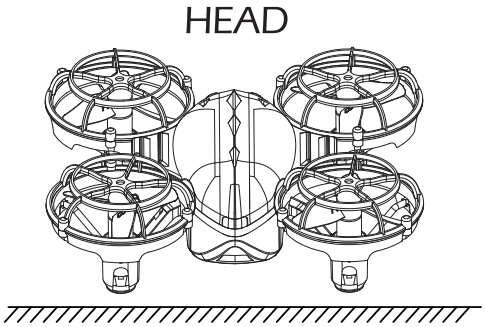

② Place the drone on a flat and level surface with the head forward and the tail towards the pilot.

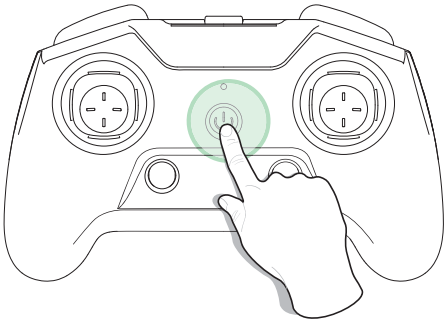

③ Power on the transmitter.

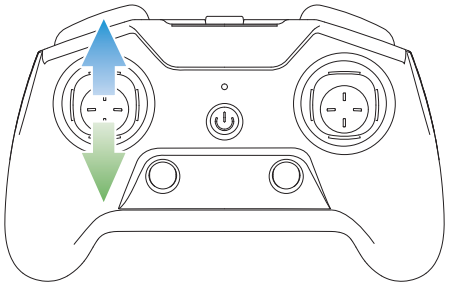

④ Push the throttle joystick up then down to pair the drone with the transmitter. The indicator lights on the drone will turn solid if the drone is paired successfully.

10.2 Calibrating the Gyro

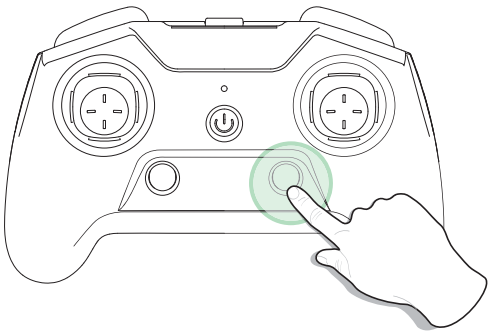

Long press the Calibrate the Gyro button for 2 seconds to calibrate the gyroscope. The indicator lights on the drone will blink quickly and turn solid that indicates the calibration is completed.

Tips: To ensure a stable flight, we suggest that the pilot calibrates the gyro every time after pairing the drone and after a crash.

10.3 One Key Takeoff / Landing

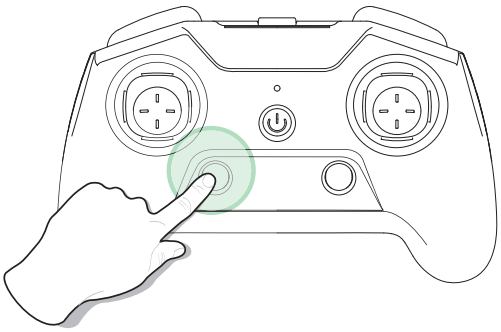

After pairing/ calibration, press the One Key Takeoff / Landing button, the drone will automatically take off and hover at 3 feet altitude. At this time, you can control this drone by using the joysticks.

Press the One Key Takeoff / Landing button again, the drone will land on the ground by itself .

11.0 FUNCTIONS DETAILS

11.1 Speed Switch

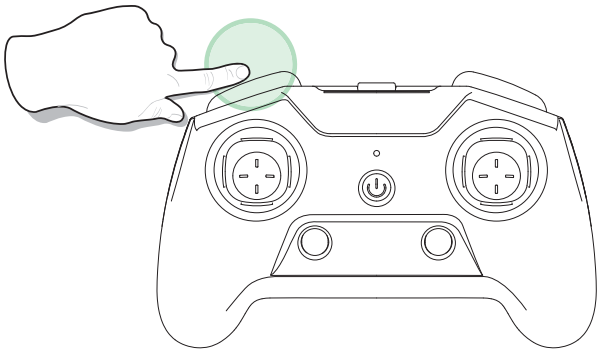

This drone comes with 3 speed modes (Low/ Medium/ High). Press the Speed Switch button to switch the speed. "Di" indicates Low Speed. "Di Di" indicates Medium Speed and "Di Di Di" indicates High Speed.
(The Low Speed is default speed mode.)

11.2 Emergency Stop

⚠ The Emergency Stop function can be only used in case of emergency during the flight to avoid any of damage or injury.

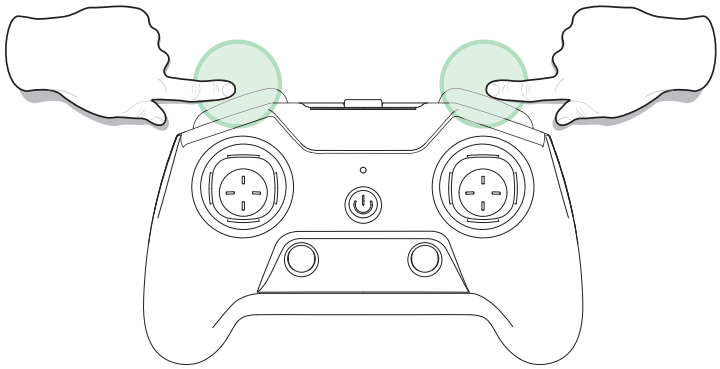

Press the upper left and upper right button of the transmitter at the same time, the motors will stop immediately.

11.3 Trimmer

Press and hold the One Key Takeoff / Landing button for about 2 seconds. After hearing a single beep, the drone enters the Trimmer function.

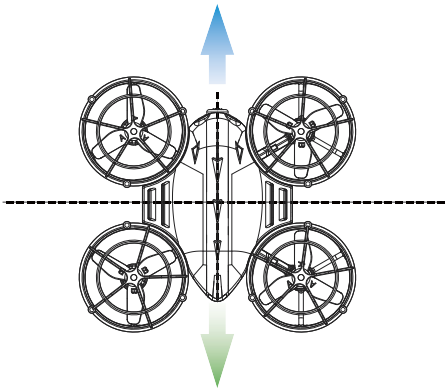

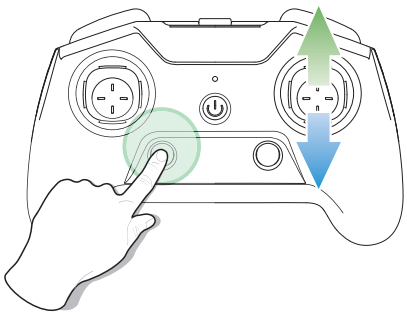

F/B Sideways Drift Trim: If the drone drifts forward, press the One Key Takeoff / Landing button and push the right joystick down at the same time to re-balance the drone. If the drone drifts backward, press the One Key Takeoff / Landing button and push the right joystick up at the same time to re-balance the drone.

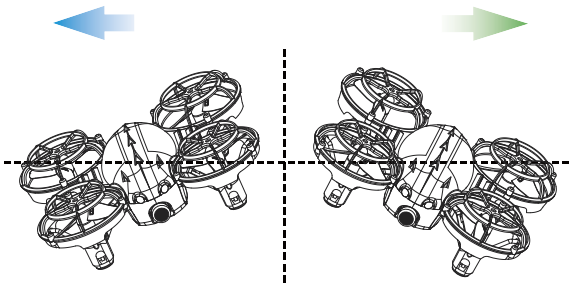

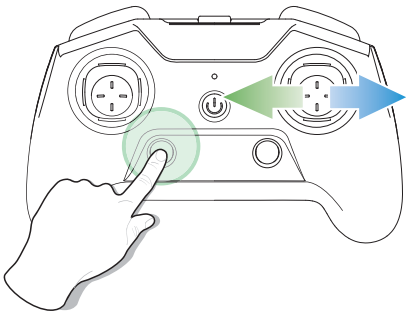

L/R Sideways Dip Trim: If the drone drifts left, press the One Key Takeoff / Landing button and push the right joystick right at the same time to re-balance the drone. If the drone drifts to right, press the One Key Takeoff / Landing button and push the right joystick left at the same time to re-balance the drone.

11.4 Obstacle Avoidance Mode

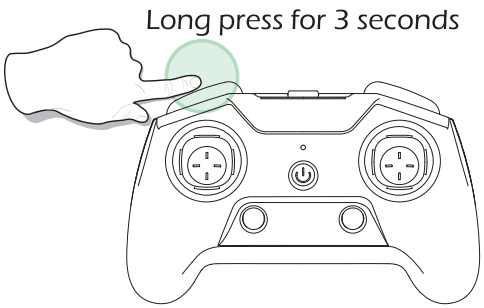

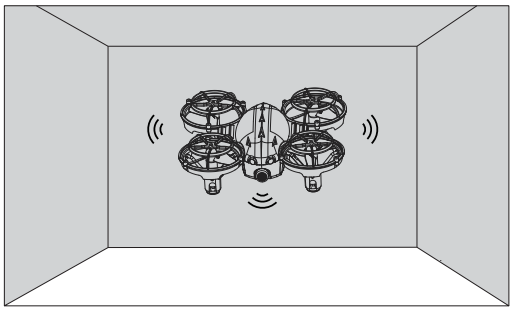

Press and hold the Obstacle Avoidance Mode button for about 3 seconds to enter the Obstacle Avoidance Mode. The transmitter will make a long beep, and the red indicator light on the drone will flashes continuously.
In Obstacle Avoidance Mode, the drone will automatically avoid obstacles. And long press the same button again to exit the Obstacle Avoidance Mode.

Tips:

· The Obstacle Avoidance Mode works best with Headless Mode.

· For objects with a pure white surface, the drone has the best obstacle avoidance effect. The distance of obstacle avoidance is 50cm to 80cm.

The precision and distance of the Obstacle Avoidance Mode is easily affected by the light strength and color of the surface. Be cautious to operate the drone in the following situation:

1. Near monochrome surfaces, like pure black.
2. Close to strong light reflective surfaces or surfaces prone to reflection.
3. Close to water or transparent object surfaces.
4. Close to moving object surfaces (such as crowds, swaying juggles and glass).
5. In an area where light changes dramatically and rapidly.
6. Close to extremely dark (lux< 10) or extremely bright (lux> 10,000) surfaces.

11.5 360° Flip

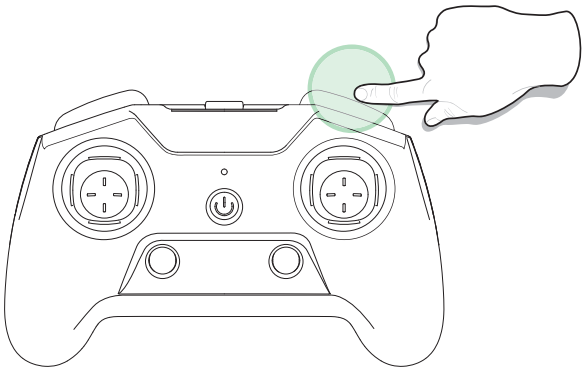

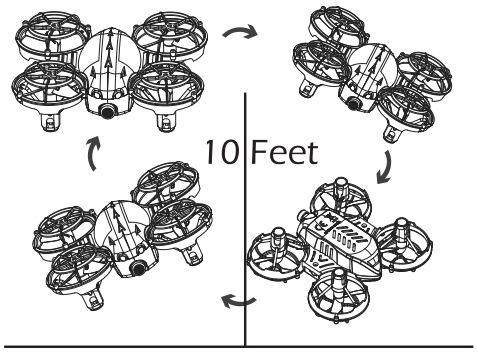

When you get familiar with all the functions of the drone, you can try this amazing flip mode. When you fly the drone at least 10 feet, press the 360° Flip button on the transmitter, then push the right joystick Forward/ Backward or Left/ Right, and the drone will do a flip towards the corresponding direction.

If you are in MODE 1, push the right joystick Left/ Right or push the left joystick Forward/ Backward, and the drone will do a flip towards the corresponding direction.

Tips: This function will perform better when the battery is fully charged.

11.6 Altitude-hold Function

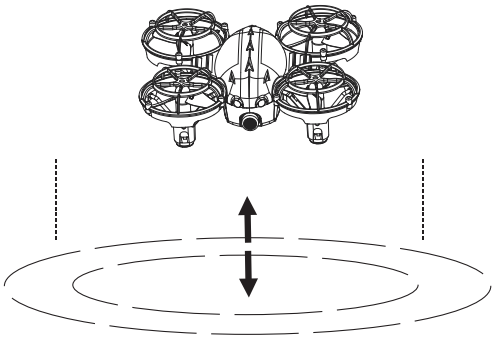

The drone is designed with altitude-hold function so the drone can maintain its altitude after you release the left stick(the left stick will automatically spring back to the middle).

11.7 Circle Fly

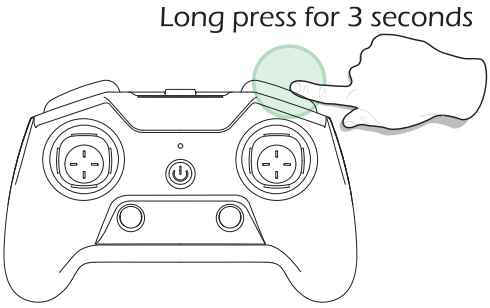

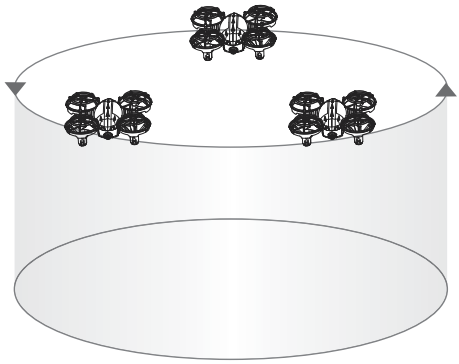

Press and hold the Circle Fly button for about 3 seconds, the drone will enter Circle Fly mode. You can exit by long pressing the same button again.

11.8 Headless Mode

1. After pairing/ calibration, or during the flight of the drone, press the Headless Mode button on the transmitter. The indicator lights on the drone start to flash continuously to indicate that drone is in Headless Mode.
2. Press the Headless Mode button again, and you will hear one beep, the indicator lights on the drone will be solid which indicates the drone exits the Headless Mode.

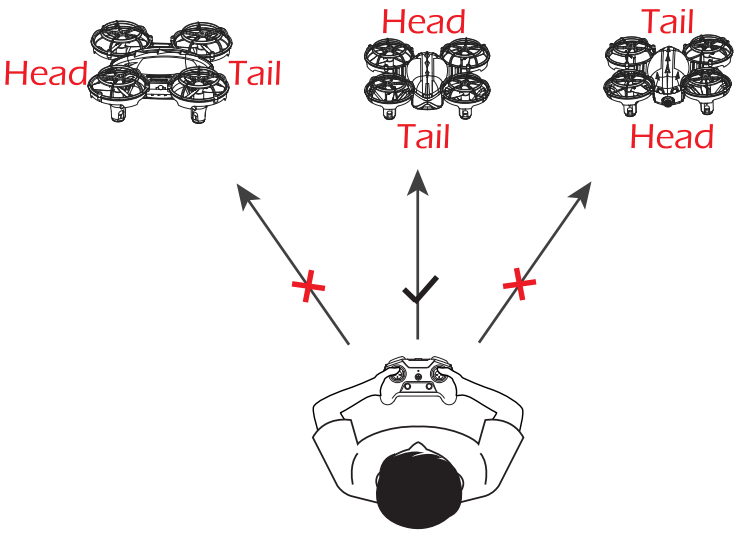

Please make the pilot stays facing the same direction
as the direction that the head of the drone faces at take-off.

Under Headless Mode, the forward direction is the direction that the head of drone faces when the drone takes off. In order to make sure the pilot can tell drone's direction, we recommend that pilots to stay in the same orientation as the drone head faces when the drone takes off. If so, when the pilot pushes the direction joystick forward, the drone will fly forward. If the pilot pushes the direction joystick backward, the drone will fly towards him/her. If the pilot move the right stick left / right, the drone will moves left/ right relative to you. It is very important that the pilot stay in the same orientation as the drone head faces when the drone takes off.

12.0 SPECIFICATIONS

- DRONE

  Model: F08

  Weight: 35g/ 1.2oz

  Max Flight Time: 7 minutes (per battery)

  Motor Model: 615

  Operating Temperature Range: 32° to 104°F (0° to 40°C)

  Size: 83 * 89 * 39mm

- DRONE BATTERY

  Capacity: 550mAh

  Voltage: 3.7 V

  Battery Type: Li-Po Battery

  Charging Temperature Range: 41° to 104°F (5° to 40°C)

  Charging Time: 40 minutes (depends on charging power and remaining battery power)

- TRANSMITTER

  Operating Frequency: 2.4 GHz

  Max Flight Distance:164 feet / 50m (outdoors and unobstructed)

  Operating Temperature Range: 32° to 104°F (0° to 40°C)

  Battery Type: 1.5V AAA Battery

- USB CHARGING CABLE

  Voltage: 5 V

  Rated Power: ≤10 W

13.0 CONTACT US

Please do not hesitate to contact us if you need further support.

support@drone2vip.com

Scan for Instruction Guides

Scanning the QR code on your mobile device will launch instructions and video on how to use the mini drone.

14.0 GENERAL INFORMATION

BATTERY WARNING:

1. Failure to follow all the instructions may result in serious injury, irreparable damage to the battery and may cause a fire, smoke or explosion.
2. Always check the battery's condition before charging or using it.
3. Replace the battery if it has been dropped, or in case of odour, overheating, discolouration, deformation or leakage.
4. Never use anything other than the approval LiPo charger the battery. Always use a balancing charger for LiPo cells or a LiPo cell balancer. It is recommended that you do not to use any other charger than the one provided with the product.
5. The battery temperature must never exceed 60°C(140°F) otherwise the battery could be damaged or ignite.
6. Never charger on a flammable surface, near flammable products or inside a vehicle(perferably place the battery in a non-flammable and nonconductive container).
7. Never leave the battery unattended during the charging process. Never disassemble or modify the housing's wiring, or puncture the cells. Always ensure that the charger output voltage corresponds to the voltage of the battery. Do not short circuit the batteries.
8. Never expose the LiPo battery to moisture or direct sunlight, or store it in a place where temperatures could exceed 60°C(car in the sun, for example).
9. Always keep it out of reach of children.
10. Improper battery use may result in a fire, explosion or other hazard.
11. Non-rechargeable batteries are not to be recharged. Rechargeable batteries are only to be charged under adult supervision.
12. Different types of batteries or new and used batteries are not to be mixed.
13. Batteries are to be inserted with the correct polarity.
14. The supply terminals are not to be short-circuited. Regular examination

of transformer or battery charger for any damage to their cord, plug, enclosure and other parts and they must not be used until the damage has been repaired.

15. The packaging has to be kept since it contains important information.

NOTE: This equipment has been tested and found to comply with the limits for a Class B digital device, pursuant to part 15 of the FCC Rules. These limits are designed to provide reasonable protection against harmful interference in a residential installation. This equipment generates uses and can radiate radio frequency energy and, if not installed and used in accordance with the instructions,
may cause harmful interference to radio communications. However, there is no guarantee that interference will not occur in a particular installation. If this equipment does cause harmful interference to radio or television reception, which can be determined by turning the equipment off and on, the user is encouraged to try to correct the interference by one or more of the following measures:

- Reorient or relocate the receiving antenna.
- Increase the separation between the equipment and receiver.
-Connect the equipment into an outlet on a circuit different from that to which the receiver is connected.
-Consult the dealer or an experienced radio/TV technician for help

Changes or modifications not expressly approved by the party responsible for compliance
could void the user's authority to operate the equipment. This device complies with Part
15 of the FCC Rules. Operation is subject to the following two conditions:
(1) this device may not cause harmful interference, and
(2) this device must accept any interference received, including interference that may
cause undesired operation.