Confidence by Control

SIDE-POWER Thruster Systems

# Installation & User Manual
# Radio Remote RCS-20U v1.0.1

**SLEIPNER MOTOR AS**
P.O. Box 519
N-1612 Fredrikstad
Norway
www.side-power.com

Made in Norway

© Sleipner Motor AS 2018

# Contents

Model range ..... 2
Technical specifications ..... 3
Important precautions ..... 3
Receiver installation ..... 4
User precautions ..... 5
How to use RCS-20U ..... 6
Transmitter LED operation and alarm indication ..... 7
Electric diagram ..... 8
Programming additional transmitters ..... 9
Replacing transmitter battery ..... 10
Dimensions ..... 11
Safety Information ..... 12

# Model range

The radio remote control can control a single bow thruster or a bow and stern thruster combined. The receiver can receive the signals of up to four transmitters.

**Remote control kit RCS-20U consists of:**

- Receiver: Part no. RCRS-2U
- Transmitter (incl. battery): Part no. RCT-20U
- Holding bracket for transmitter unit: Part no. RC-HOLDER

Additional transmitters can be ordered separately; Part no. RCT-20U

We **Sleipner Motor AS** declare that this device complies with health and safety requirements according to the Directives
EN301 489-3 V1.4.1:2002
EN301 489-1 V1.4.1:2008
IEC 60533:1999
EN300 220-1 V2.3.1:2010
EN300 220-2 V2.3.1:2010

# Technical specifications

| | Transmitter | Receiver |
|---|---|---|
| Power feed | 1x3V battery (type: CR2032) | 12V or 24V power source |
| Frequency (MHz) | 914-917 MHz | 914-917 MHz |
| Operation temp. | -10°C / +55°C | -15°C / +55°C |
| HxWxD (mm) | 107x47x21 | 110x35x35 |
| Weight (g) | 60 | 170 |
| Voltage | | 8-30V |
| Operating range | 15m under normal operating conditions | |

# Important precautions

- With the boat on land, only run the thruster for a fraction of a second, as without resistance it will accelerate very fast to a damaging rpm.
- This manual is intended to support educated / experienced staff.
- When installed in boats approved or classified according to international or special national rules, the installer is responsible for following the demands in accordance with these regulations / classification rules. The instructions in this guide can not be guaranteed to comply with all different regulations / classification rules.
- The transmitter and the receiver have the same factory preset code so no programming is necessary. When additional transmitters are to be used, follow the instructions in the programming section.

**Compass safe distance:**

- RCT-2xxU: 0,3m
- RCRS-2U: 0,2m

# Receiver installation

***Prior to installation, it is important that the responsible installer reads this guide to ensure necessary acquaintance with this product.***

- Install the receiver minimum 1 meter (3ft) from high power cables and data communication cables or other sources of electrical interference, i.e. navigation instruments, radio communication devices, electric motors and generators.
- Install the receiver minimum 1 meter (3ft) above sea level.
- Install the receiver outside of shielded areas for radio signals, i.e. boxes made of metals or other material with shielding properties.
- Install the receiver in a dry environment, where no condensation can enter the unit. (The receiver assembly is not waterproof.)
- The receiver is powered by the S-link cable.
- Mount the receiver using the four holes (please see picture on page 5).

**Note! Faulty installation will render all warranty given by Sleipner Motor AS void.**

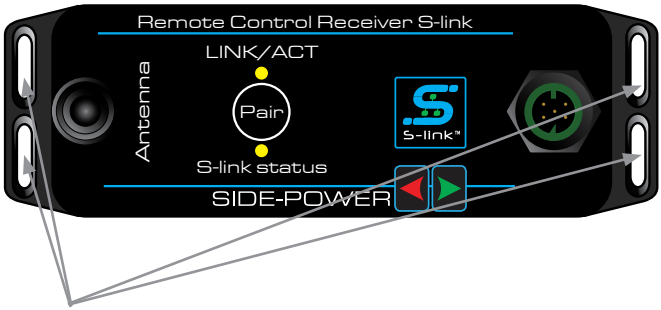


Mount the receiver by using the 4 holes.

# User precautions

- Ensure that you know the location of the main battery switch that disonnects the thruster from all power sources (batteries) so that the thruster/windlass can be turned off in case of a mal-function.
- The maximum continues usage time of the electrical thruster is approx. 3 minutes. The electro motor has a built in thermal cut-off switch that will shut it off when overheating and re-engage it when it has cooled down some. This should be considered when planning your manouvering.
- Never use a thruster close to somebody in the water, as the thruster will draw objects close by into the tunnel and contact with the rotating propellers will cause serious injuries.
- Never use a windlass close to somebody in the water, an unexpectedly drop of the anchor can cuse serious injuries.
- If the thruster stops giving thrust while the electric motor is running, chances are that there is a problem in the drive-system. You must then immediately stop trying to run it, and turn it off, as running the electricmotor for more than a few seconds without resistance from the propeller, can cause serious damage to the electricmotor.
- When leaving the boat always turn off the main power switch for the thruster/windlass and turn off the power to the receiver.
- We advice to always keep the main engine(s) running while using a thruster/windlass. This will keep the batteries in a good charge condition. This will also give better performance to the thruster.
- It is the owner/captain/other responsible party full responsibility to assess the risk of any unexpected incidents on the vessel. If the thruster stops giving thrust for some reason while maneuvering you must have considered a plan on how to avoid damage to persons or other objects.

# RCS-20U

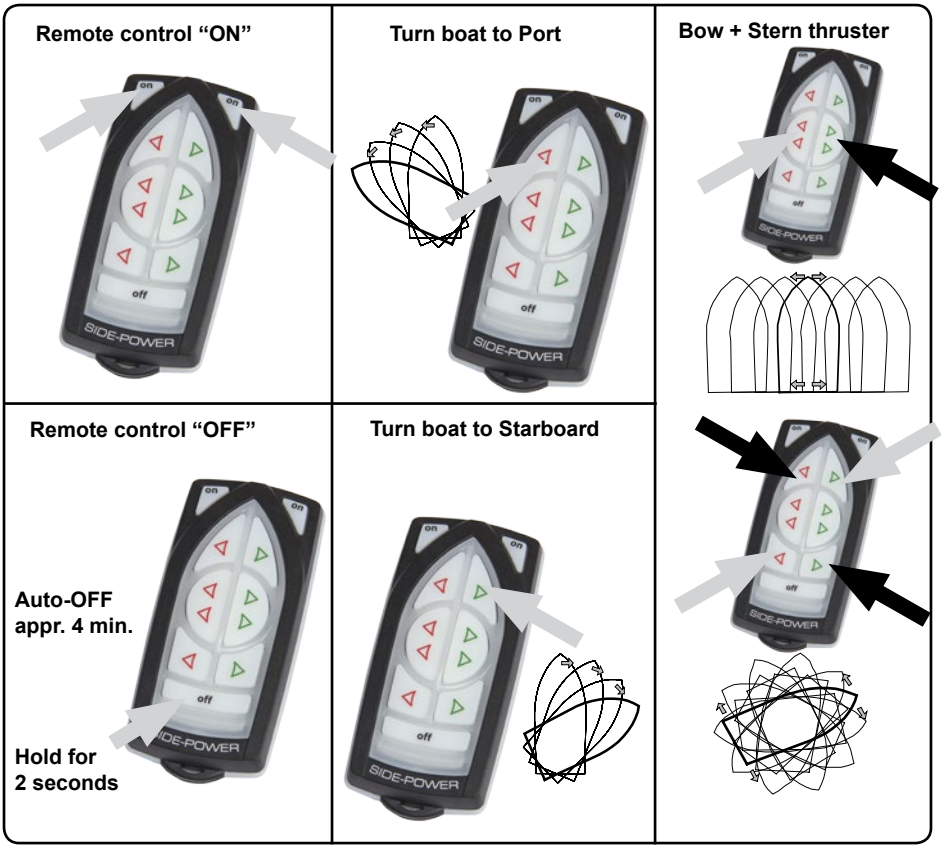


**How to use a bow/stern thruster**

1. Turn the main power switch for the bow/stern thruster on. Turn on the power to the receiver.
2. Turn on the transmitter by pushing the transmitter’s two “ON” buttons. The remote system is now activated and then turns off automatically appr. 4 min. after the last usage.
3. Please take some time to exercise thruster usage in open water to avoid damages to your boat.
4. Turn the bow/stern in the desired directiony by pushing the red button for port movement or the green button for starboard movement.

**How to use a bow & stern thruster combined**

The combination of a bow and stern thruster offers total manouverability to the boat and the opportunity to move the bow and the stern separately of each other. The remote middle buttons gives you the opportunity to operate both thrusters in the same direction with one keypress, making sidewards movement easier.

**Remote Control Deactivation**

Push the transmitter’s “OFF” button for 2 seconds (the remote control deactivates automatically after approx. 4 minutes after the last usage).

- **If in doubt, try in open water first!**

## Transmitter LED operation and alarm indication

| State | LED status | Alarm status |
|---|---|---|
| Transmitter ON | The yellow LED's blink each second | No sound |
| Buttons activated | The yellow LED's blink fast | No sound |
| Pairing mode | All LED's on | No sound |
| Connection lost | Red LED is blinking once each second | 3 beeps from the buzzer each second |
| Low battery | Red LED blink | One beep |

## Receiver LED indicator

| S-link status LED | Status |
|---|---|
| OFF | No power to receiver |
| Continous green | OK, S-Link Bus active |
| Blinking green | No activity on S-link Bus |

| LINK/ACT LED | Status |
|---|---|
| OFF | Remote off |
| ON | At least one transmitter connected. |
| Blinking | Device in pairing mode. |

# Electric diagram

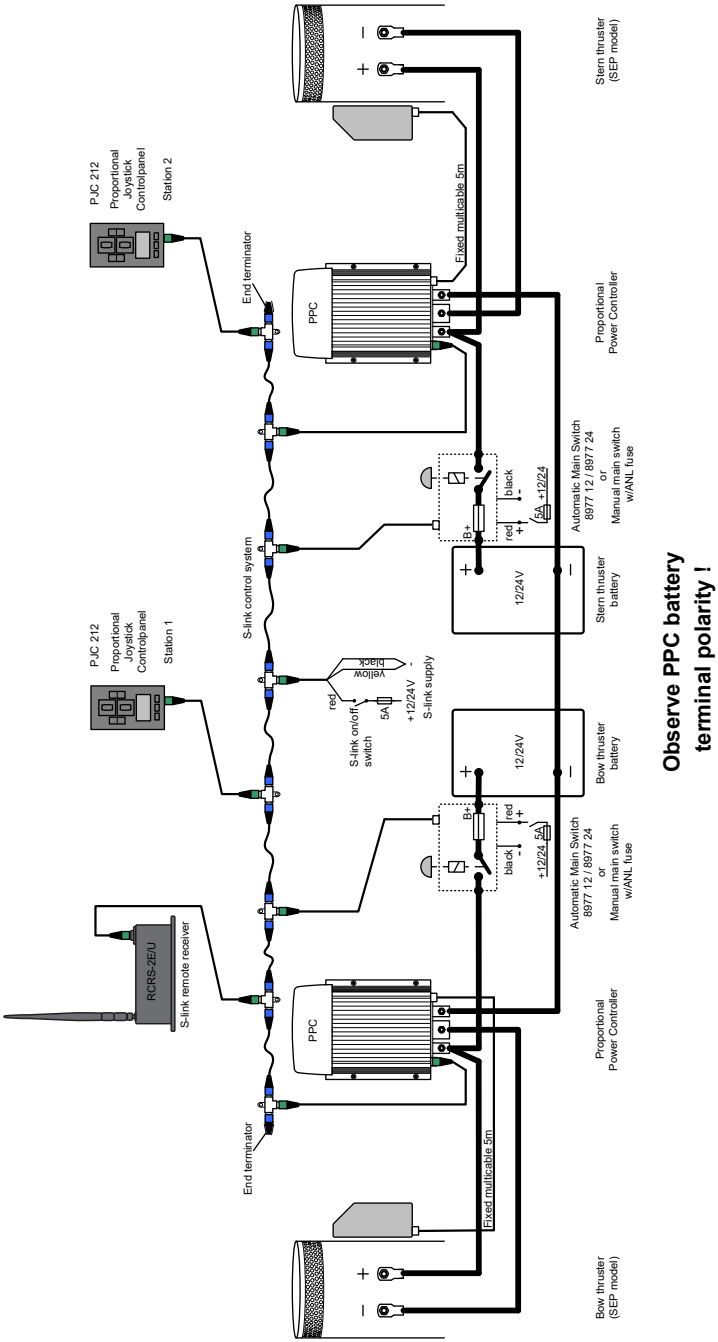

# Programming additional receivers

The original transmitter and receiver have the same factory preset code so that no programming is necessary. When additional transmitters are to be used, the additional transmitters has to be paired with the receiver.

1. Be sure there is power on the receiver (S-link status LED is blinking green or continous green ) and the transmitter that should be paired is off.
2. Push the Pair Button on the receiver to put the receiver in pairing mode (as shown above). The LINK/ACT LED should start to blinking.
3. Within 10s after the receiver pair button is pushed, set the transmitter in pairing mode by holding the off button and pressing both “ON” buttons at the same time, all the transmitter LED’s turn on indicating that it is set in pairing mode. When a pairing signal is received from the receiver the transmitter LED’s while turn off and the system is ready to be used. If no pairing signal received within 10s the transmitter will leave the pairing mode.
4. Additional transmitters must be programmed according to step 2-3. You can pair up to 4 transmitters.
5. To clear all transmitters paired with the receiver hold the pair button on the receiver for approximately 10s until the LINK/ACT LED stops blinking. When the LED stops blinking release the pair button. The receiver is then ready to pair with up to four transmitters.

# Replacing transmitter battery

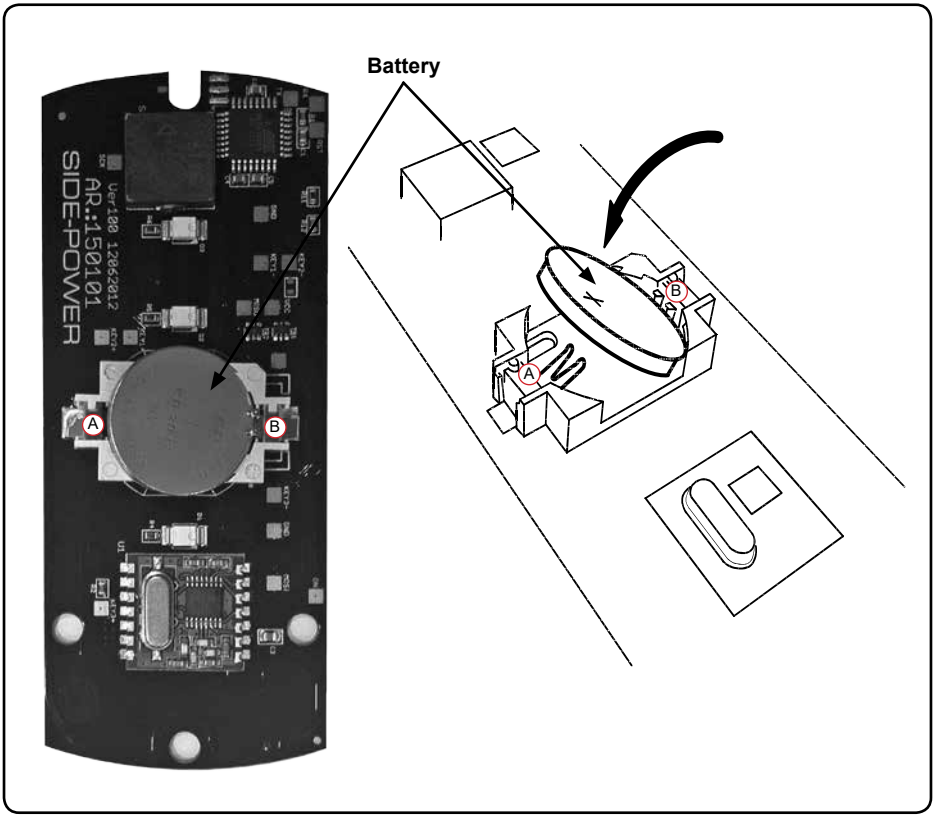


## WARNING:

*Before working on the transmitter, deactivate the transmitter and the receiver (push "OFF" on the transmitter(s)) and turn off the power to the receiver as well as the thruster mainswitch.*

1. Open the transmitter case by removing the 3 torque screws.

2. Remove the battery by inserting a screwdriver or similar between battery and holder at point A, and gently flip the battery out, taking care not damaging the battery grips at point B.

3. Insert the new battery (Type CR2032, 3V - Brand name recommended). Be sure to insert the battery with the positive pole up diagonally into the battery holder, ensuring that the edge of the battery is under the battery grips (B). Press the battery down until secured at point A.

4. Close the transmitter. Put the cover back in place, ensure that the rubber seal between remote upper and lower part is located correctly. Place the 3 screws (remember sealing washer) in their recessed holes and tighten.

# Dimensions

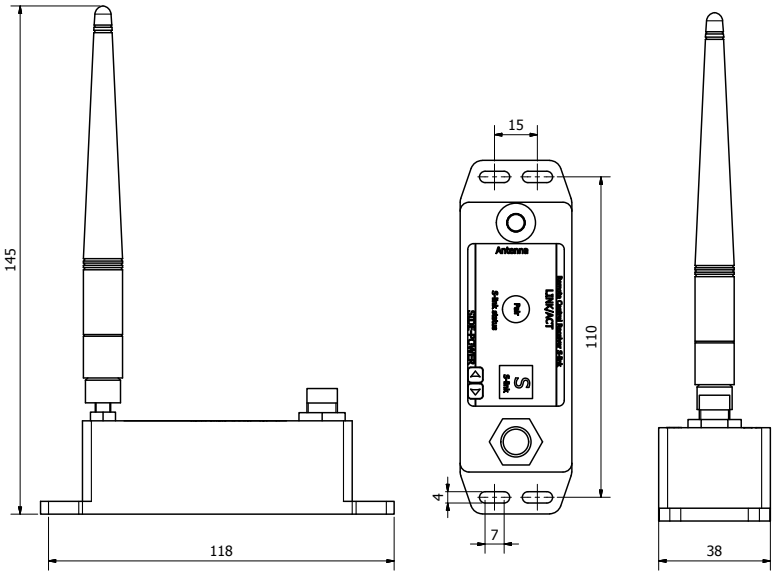
145
118
15
110
4
7
38
Antenna
LINK/ACT
S-link
SIDE-POWER

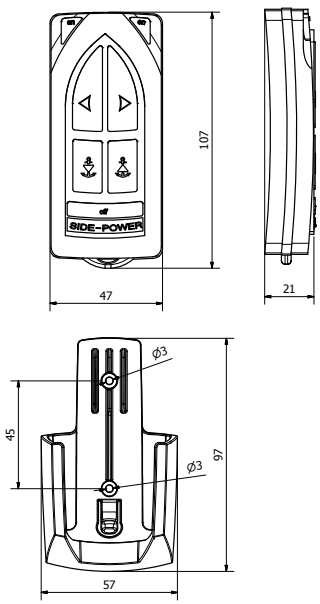
107
47
21
SIDE-POWER
Ø3
45
97
Ø3
57

# Safety Information

## FCC statements

Changes or modifications to the equipment not expressly approved by the party responsible for compliance could void the user's authority to operate the equipment.

This device complies with Part 15 of the FCC Rules. Operation is subject to the following two conditions: (1) this device may not cause harmful interference, and (2) this device must accept any interference received, including interference that may cause undesired operation.

NOTE: This equipment has been tested and found to comply with the limits for a Class B digital device, pursuant to Part 15 of the FCC Rules. These limits are designed to provide reasonable protection against harmful interference in a residential installation. This equipment generates, uses and can radiate radio frequency energy and, if not installed and used in accordance with the instructions, may cause harmful interference to radio communications. However, there is no guarantee that interference will not occur in a particular installation.

If this equipment does cause harmful interference to radio or television reception, which can be determined by turning the equipment off and on, the user is encouraged to try to correct the interference by one or more of the following measures:

- Reorient or relocate the receiving antenna.

- Increase the separation between the equipment and receiver.

- Connect the equipment into an outlet on a circuit different from that to which the receiver is connected.

- Consult the dealer or an experienced radio/TV technician for help.

## ISED statements

This Device complies with Industry Canada License-exempt RSS standard(s). Operation is subject to the following two conditions: (1) this device may not cause interference, and (2) this device must accept any interference, including interference that may cause undesired operation of the device.

Le présent appareil est conforme aux CNR d'Industrie Canada applicables aux appareils radio exempts de licence. L'exploitation est autorisée aux deux conditions suivantes : (1) l'appareil ne doit pas produire de brouillage ; (2) l'appareil doit accepter tout brouillage radioélectrique subi, même si le brouillage est susceptible d'en compromettre le fonctionnement.

# Worldwide sales and service

www.side-power.com

SLEIPNER MOTOR • AS P.O. Box 519 • N-1612 Fredrikstad • Norway

The information given in the document was correct at the time it was published. However, Sleipner Motor AS can not accept liability for any inaccuracies or omissions it may contain. Continuous product improvement may change the product specifications without notice. Therefore, Sleipner Motor AS can not accept liability for any possible differences between product and document.