深圳市创荣发电子有限公司

SHENZHEN C&D ELECTRONICS CO., LTD.

遥控器产品规格书

Remote control Specification

文件编号：

产品名称 Product name	RF439A IR/BLE Voice Remote Control
C&D 产品型号 Part NO	135439A0001
客户型号 Funai Part No	URMT26CND001
生产厂家 Production factory	Shenzhen C&D Electronics Co., Ltd.
生产商地址 Production factory address	9/F, Tower 9A, Baoneng Science & Technology Park, 1Qingxiang Road, Longhua District, Shenzhen
批准	Beiqi Li
审核	Chunhe Tan
拟制	Yanling Fu

客户确认（盖章）

客户名称		审核	批准

If any matter related to these specifications needs to be clarified, discussions shall be hold promptly the two parties concerned the to determine the issue.
如规格书中的任何内容需要解释，需双方讨论定夺.

版本记录 Version：

版本 Version	日期 Date	姓名 Name	备注 Notes
V1.0	2021-2-2	Yanling Fu	Draft
V1.1	2021-3-22	Yanling Fu	

2、目录 Index

NO.	appellation
1	规格书封面 (Approval Sheet Cover)
2	目录 (Index)
3	检验内容及要求 (Verification content & Requirement)
4	产品效果图 (Product Cosmetics drawing)
5	按键码值 (Code table)
6	产品功能（software function）
7	遥控器原理图(Schematic diagram)
8	PCB 图 Board diagram (2Layer)
9	产品 BOM 清单 BOM Material list
10	产品结构尺寸图纸(product structure views)
11	产品包装示意图(Packing drawing)
12	QC 流程图 QC Flow Chart

三、检验内容及要求 (Verification content & Requirement)

1、 一般项目(General Items)

1.1、 适用范围 Apply for: RF439A Remote Control

1.2、 工作环境 Working Environment: 0℃~45℃、5％~80％RH

1.3、 存储温度 Storage Environment:-20℃~60℃，5％~90％RH

1.4、 试验环境 Test Environment:5℃~35℃、45％~75％RH、86~106Kpa

1.5、 额定电压 Rating Voltage:DC3.0V

1.6、 适用电池 Battery: R03/AAA x2pcs

1.7、 重量范围 Weight：77g(Without battery)

1.8、 产品尺寸：165.30*48.00*20.00mm

2、 可视检测项目 Visible Test Item

测试条件 Test Conditions

A:正面在标准光源下 30CM 距离 10 秒以内目测 Put the top face under the standard light source and test by sight from the 30cm distance for 10 seconds

B:其余面标准光源下 50CM 距离 5 秒以内目测 Put other sides under the standard light source and test by sight from the 50cm distance for 5 seconds

序号 No.	项目 Item	测试要求 Test Requirements
2.1	划伤、沾污、割裂、变形 Scratches, Stain and distortion of the Unit	无上述各种现象 No described situations
2.2	印刷图形及文字 Hot Stamped Graphics and Letters	内容正确、清晰、均匀、整齐 Correct, in focus and comply with the drawing
2.3	壳体配合 Match of top case and bottom case	无翘起、变形、开裂、断差。（离缝: 0.1mm; 刮手: 底刮<0.1mm, 无面刮，电池盖与后盖弧面断差小于0.05mm，只允许顺差，不允许逆差） No distortion and Crack between the twoparts
2.4	表面 Appearance	材质正确、颜色一致 Correct material and color

3、 电气性能 Electric Capability

序号	项目	测试要求 Test Requirements
3.0	主控芯片 IC	Airoha AB1613
3.1	软件版本 FW Version	RF439A-V06
3.2	蓝牙版本 Bluetooth version	Bluetooth LE 4.2
3.3	按键数量 Number of Keys	26 Keys (including Mic. Key)
3.4	遥控器设备名称 Remote control device name	Philips TV Voice RC_6
3.5	载波频率 Carrier frequency	2402MHz ~ 2480MHz 跳频
3.6	工作电压 Working Voltage	2.0v ~3.3v
3.7	待机电流 Static Current	≤10uA 在 3.0V 电压下，配对后的遥控器静置 30 秒后（进入深度睡眠状态）后测量其电流.At 3.0v, the paired remote is left to rest for 30 sec (deep sleep) before the current is measured.
3.8	工作电流 Working Current	RF 按键工作电流 RF Key working current≤15mA 红外 IR<40mA 语音 voice <20mA
3.9	IR 发射距离 IR distance （工作电压 3.0V）Working Voltage(3V)	IR 方案一：用船井电视机测试遥控器 Use the funai TV to Test the remote control: 1. Long distance 长距离 - Front（前） : 7m - LR（左右） 30°: 5m - Up（上） 15°: 5m- Down （下）30°:5m IR 方案二：用接收治具测试遥控器 Use the receive to Test the remote control: 1. Long distance 长距离 - Front（前） : 10m - LR 30°（左右）: 8m - Up 15°（上）: 8m - Down 30°（下）:8m
3.10	RF 发射距离 RF distance （工作电压 3.0V）Working Voltage(3V)	Measure the distance that Voice transmitting function can be guaranteed for the TV set or the PC in the specified place(the test site) 测试语音是否可以到达的指定位置的电视机/PC 的位置。 ->Distance ≧10m google 的要求是±30°，＞10m.
3.11	蓝牙输出功率 RF transmission power	1dbm~5dbm
3.12	初始频率偏移 Carrier frequency offset, drift	-75KHz≤fo≤75KHz

3.13	语音采样率 Audio feature	Google ATV Voice On-air data rate: 64kbps [16kHz/16bit/4:1 ADPCM Compression]and 32kbps [8kHz/16bit/4:1 ADPCM Compression] Press & Release Talk Voice timeout: 30sec
3.14	语音信噪比 Audio SNR	Evaluate the SNR of Voice data(wav.) that be captured 评估所评估语音的信噪比如下： [Google ATV Help] THD MUST be less than 5% @1kHz, (94dB SPL as referenceAudio input sensitivity: 94dB SPL as refrence sound pressure level).
3.15	低电压提示 Battery Level	- Battery Level is sent to TV by NOTIFY. Format : UINT8, Unit : percent。电视机上以%显示当前电池电量.
3.16	性能测试 Key functional test	Each key must be operated effectively.每个按键需操作有效.
3.17	睡眠 Sleep	After any button of the remote control is released, if there is no button within 60s, it will sleep completely.遥控器任一按键松开后，如果 60s 内无按键则彻底睡眠. MIC key released : RCU enter to sleep after 30s. (Exception : During the period of OTA, the wake up will be allowed for up to 15minutes.)
3.18	唤醒 Awake	≤500mS. Remote control in sleep, trigger any button, wake up the remote control 遥控器在睡眠状况下，触发任一按键，启动遥控器.
3.19	OTA 功能	支持 OTA 功能; Support OTA.
3.20	支持操作系统 Android version of TV	Android9.0 及以上版本 Android 9 Pie (Supports updates to Android 12)。

3.21	Battery life test 电池寿命测试	Target 36 months -Idle 理想的状态是 36 个月 ● Calculate based on quiescent current Target 12 months -Active 基于静止与工作电流计算，目前是 12 个月 ● Calculate based on daily key presses and BLE voice usage 基于日常按键使用和语音使用计算 ○ Example usage:示例使用： ■ # of Key presses over BLE per day#按键每天使用次数超过语音按键 ● 200 ■ Total duration of BLE voice per day 每日语音使用总时长 ● 140 seconds ● 20 activities with 7 s each
3.22	Short-open test for all components 所有元器件和端子进行开路测试	Trying a short-open test for all parts and terminals 试着给所有元件和端子做开路测试 ->SHOULD be free from abnormality such as firing, excessive smoking, harmful and dangerous abnormality. 不能出现起火、浓烟等有害和危险的不正常情况。
3.23	工作原理图 Schematic	详见工作原理图. Circuit schematic is described in detail below.

4、 机械性能 Mechanical Capacity

S/N	项目 Item	需求 Requirement	测试条件 Test Condition
4.1	外观检查 Appearance inspection	没有明显缺点. No obvious defect	50 厘米检查外观. Distance 50 cm to check appearance
4.2	按键行程 Key stroke	0.4mm±0.3m，The keys bounce well.具体要求手感清脆，无卡键.	力点在键中心时测量. The point of force is measured at the center of the bond
4.3	按键力 Button strength	带锅仔片按键 With metal dome:300±100g 其余键按键力 Without metal dome:200±60g	产品按放在测试平台上，用直径 4 毫米针状物按压按键，并测力的大小。Put the product on the test platform, press the button with a 4mm diameter needle and test the pressure.
4.4	耐温水测试 Warm water test	检查遥控器的表面色调有无变化,字符,标志是否被擦掉. Check whether the surface color of the	用滴管将 60℃的温水,滴在遥控器的表面的三个不同部位(包括字符,图形符号部位),每部位滴

		remote control has changed and whether the characters and marks have been erased.	0.1ml,面积约 1cm²,然后软布擦干。Drop the 60℃ warm water on the surface of the remote control in three different parts (including character and graphic symbol parts) with the dropper. Drop 0.1ml on each part, with an area of about 1cm, and then wipe the soft cloth dry.
4.5	Alcohol tolerant test 耐酒精测试	->Printing SHOULD not fade .丝印要求不掉色.	99% methanol with 4.9N load 99%甲醇，4.9N 的荷重 Rub the printed surface with gauze containing 99% alcohol with 4.9N load at the speed 30 times/minutes 用纱布蘸 95%的酒精，荷重 2.94N 的力以每分钟 30 次速度擦拭印字处 *on panel（在面上的印字） --- 50 times *on rubber （在导电胶上的印字）--- 200times
4.6	Eraser test 橡皮擦测试	Printing SHOULD not fade 外观无明显磨损（壳体）,丝印要求不掉色.	Rub the printed surface with a eraser (type 512N) with 5N load at the speed 60 times/minutes 用橡皮擦(型号 512N)以 5N 的荷、每分钟 60 次的频率擦拭印刷表面 *on case（壳子上的印字） --- 50 times *on rubber（导电胶上的印字） --- 100times.
4.7	Pencil scratch test(Hardness of coating) 铅笔划痕测试	->SHOULD not be injured with a pencil higher than 2H. 印字不能被高于 2H 的铅笔划伤	Scratch the printing surface with a pencil with hardness more than 2H with 7.5N load at an angle of 45°at the speed of 10cm/sec. 用硬度高于 2H 的铅笔负重 7.5N 的力，以 10cm/S 的速度在角度为 45°的状态划向印字表面
4.8	Tape test 胶带测试	->Printing SHOULD not cling to the tape, and the surface of plastic SHOULD not expose. 印字不能粘在胶带上。	Paste thecellophane tape with the length longer than 30mm on printed surface and peel it off quickly at an angle of 45°. Conduct this procedure at same point twice. 用长于 30mm 玻璃纸贴在印字的表面然后在 45°角的时候快速撕下，在同一个点上做 2 次相同的动作.

4.9	Cross cut test 百格测试	->a square SHOULD not cling to the tape. 胶带上不能粘碎屑 measure force of adhesion, count number of pealed section in cutting area. 测量附着力，计数切割区域内已剥落的截面数。	Should cut lines (11×11) at intervals of 1mm with cutting knife, 用刀每隔 1mm 割一条线（11X11） Paste the scotch tape on cutting area and peel it off quickly at an angle of 45° 在被割的区域贴上透明胶带并且在 45°角快速撕下胶带.
4.10	Waterproofing test 防水测试	Pour water 200ml on the keys, specially the gap between key and key-hole for 3 seconds, afterward wipe water immediately, check the operation. Next, after disassembly, check the surface of PCBA. 3S 钟倒 200ml 水在按键上，尤其是按键孔位置，立即把水擦干，然后检查操作。 接下来，拆开遥控器，检查 PCBA 表面。 ->RCU SHOULD operate and the surface of PCBA SHOULD not get be wet. 遥控器要正常工作，PCBA 表面不能湿。	1. Place the RCU on a horizontal surface with the top cover facing up. Do not insert batteries. 1. 遥控器正面朝上平放，不要装电池。 2. Fill a beaker with 180ml of water (Colored by orange ink), then pour the water over the keys of unit evenly from 5cm height to the top of unit. 2.用烧杯装 180ml 的水（水用橘色墨水染上色），然后把水从 5cm 的高度倒到遥控器表面。 3. Leave the units 1 minute after pouring 180ml of water. 3. 倒完 180ml 水之后把遥控器放置 1 分钟。 4. Wipe water on the surface of the units without pressing keys. 4. 把遥控器表面上的水擦掉，不要按按键。 * Do NOT tilt or reverse during wiping. 擦拭时不要倾斜或者倒置遥控器。 * Do NOT wipe water between keys and top case. 不要擦上壳或者遥控器按键之间的水。 5. After wiping, leave the units 96 hours to dry. ※ Temperature 25 ℃ ± 5, humidity 50% ± 10 5. 擦拭后，把遥控器放置 96 小时干燥 ※温度是 25 ℃ ± 5，湿度是 50% ± 10 6. Insert batteries. All keys & MIC shall work properly. 6. 插入电池。所有按键和 MIC 要正常工作。 7. Open top case to observe inside the unit. No

			wet or mark of liquid infiltration shall be observed on the PCB (circuit patterns side). 7. 打开上壳观察内部。在电路的那一面，不能有水渍如板子的痕迹.
4.11	盐水测试 Salt water test	检查遥控器的外观是否异常.字符标志应清晰可见。Check the appearance of the remote control for abnormalities. Character markings should be clearly visible.	用浸过 20%食盐水的棉球或软布,轻轻擦拭遥控器表面(包括按键字符部位)50 次。Gently wipe the surface of the remote control (including the key characters)50 times with a cotton ball or soft cloth soaked in 20% salt water.
4.12	食用油测试 Edible oil test	检查遥控器的外观是否异常字符标志是否清晰。Check the appearance of the remote control for abnormalities. Character markings should be clearly visible.	将食用油（花生油、豆油或菜籽油）用滴管滴在遥控器表面三个不同部位（包括字符、图形符号部位），每部位滴 0.1mL，面积约 1c ㎡,1h 后用软布擦干。The edible oil (peanut oil, soybean oil or rapeseed oil) is dripped on the surface of the remote control with a dropper at three different parts (including character and graphic symbol parts). Each part drops 0.1ml, covering an area of about 1c ㎡. After 1hour, dry with a soft cloth.
4.13	贴纸测试要求 Label test	贴纸无脱落、翘起，撕下时无残留. No shedding and warping. No residue when torn off.	震动、跌落、高温高湿后查看标签测试结果. Check label results after vibration, drop, high temperature and humidity test.
4.14	PE 袋测试要求. PE bag test	1. 印刷油墨不能脱落.The printing ink should not fall off. 2. PE 袋不可开裂破损. PE bags shall not be cracked or damaged	1. 环境温度 30±5 度，#EF74 橡皮擦测试：负重：500gf/cm²/ 速度：30 次/分，橡皮擦擦拭区域：30mm，次数 15 次. Ambient temperature: 30±5 ℃, #EF74 eraser test: load: 500gf/cm/speed: 30 times/min, eraser wipe area: 30mm, 15 times 2. 反复拆装袋 5 次，PE 袋不能有裂开破损. Open and pack the bag repeatedly for 5 times, PE bag cannot be cracked or damaged.
4.15	卡键测试 Button test	不卡键 Button bounce well.	用手指按压键的任何点. Press any point on the key with your finger

4.16	按键工作寿命 Key working life test.	->All functions SHOULD operate normally. No harmful defects to appearance and structure 所有的功能要正常，表面和结构没有严重的损坏	Press key with a specified max load 200,000times. 用规定的荷重按压按键 20W 次。
4.17	Battery door life test 电池盖寿命测试	After performing the lid opening / closing cycle, make sure that the top case surface is faced up and dropped onto the wooden board from a position of 20cm to make sure that the lid does not come off or the battery does not pop out. 在做完开关循环的动作后请确保遥控器的正面朝上然后把遥控器在距离木板 20cm 的高度跌下，遥控器跌下后电池盖不脱落或者电池不弹出来	Attach and detach the battery cover 200times. ->SHOULD have a designated holding force 连接和拆卸电池盖 200 次 应该有个设定的夹持力
4.18	电池卡扣可靠性 Battery buckle reliability test	不允许电池脱漏，且保持遥控器连接功能正常。Do not allow the battery to leak, and keep the connection function of the remote control normal.	1.取下电池后盖; 2.装电池; 3.用遥控器两侧各敲击桌面(5~10cm 高)5 次。1、Remove the battery cover; 2、Install batteries; 3. Tap the desktop (5-10cm high) for 5 times on both sides of the remote control.
4.19	电池装入取出寿命 Battery spring life	1. 测试完成遥控器功能正常; After testing, the remote control functions normally ;2. 电池弹片无损坏及形变. Battery spring without damage and deformation.	以每分钟 4~5 次的速度连续插入，装入取出电池 500 次后检查应无异常. At the rate of 4~5 times per minute, continuous insertion, loading and removing the battery for 500 times after inspection should be no abnormal.
4.20	声音要求 Sound test	遥控器晃动是不能有异响。Remote control should not have abnormal sound when shaking.	遥控器晃动，近距离听有无异响。Remote control shaking should not have abnormal sound.
4.21	Drop test (Normal height) 跌落测试（正常高度）	没有可见的损坏或功能失效->SHOULD meet the electrical performance after drop test. 测试后要满足电气性能要求 SHOULD be free from danger such as electrical shock, fire, etc. 不能出现起火、电击等危险情况。 SHOULD be free from openning the joint of caases, pattern peeling off, cracks, etc. 遥控器遥控器不能上下壳分开，不能有其它部件脱落，裂纹等	Drop the RCU onto a wooden board (thickness:3cm) from 100cm height. Drop the RCU with the battery inserted. 将遥控器装上电池，从 100cm 的高度跌落到 3cm 厚的木板上。 3times per unit * 2units (1st: smallest/second small/largest plane, 2nd: oppsite planes) 2 个遥控器，每个遥控器跌 3 次（第一个：最小面、次小面、最大面 第二个：另外一面）

4.22	Drop test (Abnormal height) 跌落测试（非正常高度）	Drop the RCU onto concrete- or asphalt- floor from 150cm height, about the weakest planes of RCU in the Normal height Drop test 将遥控器最弱那面从 150cm 高度跌下，跌在混凝土或者沥青地面上 ->SHOULD be free from abnormality such as scattering of broken cabinet etc., or damage on connected set.	不可以有遥控器结构破损，遥控器零件散落等连接性的问题发生 And the edges of broken cabinet should not be sharp. *But, the damage on function can be accepted. 断裂的结构件边缘不能是锋利的。 遥控器功能性问题可以接受。
4.23	Drop test in packing 带包装的跌落测试	->SHOULD meet the electrical and mechanical performance mentioned in a specification. 需要满足在规格书中提到的规格	Drop a carton box filled with RCUs from the specified height. 跌落测试规格如下： Height : 80cm (<10kg) 65cm (10kg=< <20kg) *2 corners（2 角）, 2 ridges（2 脊）, 6 planes（6 面）
4.24	包装运输试验：振动试验 Package transportation test: vibration test	没有功能失效或材料损坏. No functional failure or material damage.	整箱包装的振动测试：将产品放置在包装箱内。将此包装箱放置在符合以下条件的振动装置上：频率：7Hz 加速度：1.05g 在三个轴方向上测试，每个方向持续 30min。Vibration test for FCL package: place the product in the package. Place the box on a vibrating device that meets the following conditions: frequency: 7Hz acceleration: 1.05g test in three axis directions, each direction lasts for 30min.
4.25	裸机振动 Single vibration.	a 功能正常 b 无主要机械不良 c 静动态电流满足规格. No functional failure or material damage.	将成品机固定在振动台上,然后按以下条件测试：Fix the finished machine on the shaking table and then test according to the following conditions: *频率范围 frequency range: 10~55Hz *振动幅度 vibration amplitude:1.5mm * 振动周期 vibration cycle:1 分钟 (10~55~10Hz) *振动方向 vibration direction: X,Y&Z 方向 *振动时间 vibration time:每个方向 2 小时（总

			共 6 小时） *测试后,在室温中放置 30 分钟,然后检查外观和电气性能. after testing, leave it at room temperature for 30 minutes, then check appearance and electrical properties.
4.26	包装运输试验：跌落试验 Packing and transportation test: drop test	没有功能失效或材料损坏 No functional failure or material damage	将整箱产品从 60cm 高度跌落到地面，对其中三个轴向，1 边和 1 个角进行试验. FCL products were dropped from a height of 60cm to the ground, and three axial directions, one side and one Angle were tested.
4.27	Key strength or Key over load test 按键抗压 测试	Please change to "Add a vertical load(50N) to a key top for 5 seconds". 在按键上增加一个 50N 的垂直力，持续 5S，遥控器的壳子和内部元器件不可以裂缝和破损	Add a vertical load(50N) to a key top for 5 seconds ->A case and inside parts SHOULD not be cracked and broken 在按键上增加一个 50N 的垂直力，持续 5S.
4.28	抗扭强度 Torsional strength test.	无机壳爆开，无"嗞嗞"声,无机械损伤,功能正常 。No housing burst, no "sizzle", no mechanical damage, function normal.	以 5N 的力矩扭机身 1000 次. Twist the remote control 1000 times with 5N torque.
4.29	Electrostatic destruction test 静电破坏测试	(1)Discharge electricity to the joint between Upper case and Lower case. 对着上壳和下壳之间的缝隙进行放电 (2)Discharge electricity to the terminal in a battery box. 在电池仓的两端进行放电 *Probe Condition: C=200pF/R=100Ω->150pF/330Ω 针头条件：C=200pF/R=100Ω->150pF/330Ω ->The product SHOULD not be damaged. 产品不能损坏	>from 1kV to specified voltage raising 1kV step 从 1KV 做为起点，1KV 1KV 的往上增加，直到要求的电压值 >each voltage shall be discharged 10 times 每个电压值下放电 10 次 >Dis-electrify RCU after each discharge 每次放电后等静电干净后 [Air discharge SPEC]空气放电 MALFUNCTION（故障） ±15kV DESTRUCTION（摧毁）±18kV *Test with the battery inserted 装上电池测试 [Contavt discharge SPEC (Battery Terminals)] 接触放电规格（电池两端） MALFUNCTION（故障） ±5kV DESTRUCTION（摧毁）±5kV

			*Discharge with the battery removed 不带电池测试 >If the RCU recovers by reinsertion of the battery, it is DESTRUCTION. 如果遥控器从新装上电池后才回复，这就是损毁。 >If the pairing memory is erased, it is DESTRUCTION. 如果配对信息擦除，这就是损毁。 >If RCU reconnects automatically after disconnecting with the TV, it is MALFUNTION. 如果遥控器于电视机断连后又从新自动回连，这是故障

5、环境测试 Environmental Test

序号 No.	项目 Item	测试要求 Test Requirements
5.1	温度变化试验 Temperature change test	遥控器在装电池，不包装的状态下,放入具有室温的试验箱内,试验箱内的温度以 1±0.5℃/min 的降温速率(5min 内的平均速率)降至-10±3℃试验箱内达到稳定温度后,恒温 3H,然后试验箱内的温度再以 1±0.2℃/min 的升温速率(5min 内的平均速率)升高到 40±2℃等试验箱内达到稳定温度后,持续 3h,然后试验箱内的温度再以 1±0.2℃/min 的降温速率内(5min 的平均速率)降至试验室环境温度值以上,构成一个试验循环依次连续进行 20 个试验循环试验结束后,且试验箱内的温度达到稳定的试验室环境温度后,取出遥控器。20 个试验循环试验结束后,且试验箱内的温度达到稳定的试验室环境温度后,取出遥控器检查遥控器的各项功能是否正常。The remote control is put into a test box at room temperature with battery and without packaging. The temperature in the test box is cooled at a rate of 1±0.5℃/min (5min)) at an average rate of the drop to 10 + 3 ℃ - test after reaching a stable temperature in the oven, constant temperature for 3 h, and then test the temperature in the cabinet to 1 plus or minus 0.2 ℃ / min heating rate (5 min) at an average rate of increase to 40 plus or minus 2 ℃ after test the reach a stable temperature in the cabinet, for 3 h, and then test the temperature in the cabinet to 1 plus or minus 0.2 ℃ / min in the cooling rate (5 min) at an average rate fell to a lab environment temperature above, form a test cycle in turn for 20 consecutive test cycle after the test, and test the temperature in the cabinet after reaching stable laboratory environment temperature, take out the remote control Device. After the cycle of 20 tests is completed and the temperature in the test box

		reaches the stable laboratory environment temperature, take out the remote controller and check whether the functions of the remote controller are normal.
5.2	恒定湿热试验 Constant temperature and humidity test	遥控器在不包装不装电池的状态下,放入具有室温的试验箱内,然后将箱温调节至 40±2℃，当遥控器达到温度稳定后再加湿度在相对湿度为 93%,搁置 96H,先把试验箱内的相对湿度在 0.5h 内降低到 75%±3%,然后在 0.5H 内把试验箱内的温度调到正常试验大气条件下,取出遥控器 。遥控器恢复 4H 后,检查遥控器的各项功能是否正常.Remote control under the conditions of the packing is not install batteries, in a room temperature test box, then put the box temperature adjusting to 40 + 2 ℃, after reaching a stable temperature and humidity when the remote control to the relative humidity is 93%, put aside 96 h, the test of the relative humidity in the first cut to 75% within 0.5 h + / - 3%, then within 0.5 h to test the temperature in the cabinet to atmospheric conditions, normal test out the remote control. After the remote control is restored for 4 hours, check whether the functions of the remote control are normal.
5.3	High temperature storage test 高温储存测试	Expose to a constant temperature and humidity of 60±2℃ for 96h without load. 把遥控器暴露在恒温恒湿 60±2℃的环境中 96 小时，不带任何负重。 Perform measurements after leaving at normal temperature and humidity for 1h. 取出遥控器放在常温状态中静置 1 小时。 ->The RCU SHOULD operate normally. 遥控器正常工作
5.4	Low temperature storage test 低温储存测试	Leave RCU under the condition; -20℃ for 96 hours, and leave it under standard condition for 1 hour, and test the performance. 把遥控器放在如下的条件中： -20℃ 96 小时，然后取出放到常温状态下 1 小时，然后测试遥控器功能。 ->The RCU SHOULD operate normally. 遥控器正常工作
5.5	高低温操作和潮态耐受 High and low temperature operation and tide tolerance test	遥控器在装电池的状态下：Remote control with battery: 1.温箱室温下降到-10℃，保持 5 小时（在 3 小时左右拿出遥控器迅速进行功能检查、以及触控部分的灵敏度、反应速度检查）Drop the temperature of the temperature box to -10℃ and keep it for 5 hours (about 3 hours, take out the remote control and quickly check the function, as well as the sensitivity and reaction speed of the touch control part) 2.低温状态下马上拿到 25℃，80%湿度环境，3 分钟内表面结露状态下进行测试; At low temperature, 25℃ was immediately obtained, 80% humidity was obtained, and the surface was dewy within 3 minutes for testing; 3.上升温度到零上 45 度,60%湿度（温度保持 3 小时左右同样检查遥控器功能、按键手感以及触控部

		分功能、灵敏度） 测试完成后行为模式正常，无误触，反应慢。The rising temperature is 45 degrees above zero,60% humidity (keep the temperature for 3 hours or so and check the function of the remote control, feel of the keys and the function and sensitivity of the touch control part), the behavior mode is normal after the test is completed, without accidental trigger or slow reaction.
5.6	Thermal shock test 热冲击测试	Conduct the heat shock(-20℃⇔+60℃) cycle 100+/-5cycle. Measure perfprmance after leaving under standard condition for 1 hour 进行冷热冲击测试(-20℃⇔+60℃) 100+/- 5 个循环。在常温中静置 1 小时后测试功能。要能正常工作->The RCU SHOULD operate normally.
5.7	盐雾测试 Salt Spray test	1.将试件置于盐雾柜内，并在温度 35℃，盐雾浓度 5%之测试条件下，保持 24 小时 2. 以上测试完成后将测试样品于常温静置 2 小时; 1、Place the specimen in the salt spray cabinet and keep it for 24 hours under the test conditions of 35℃ and 5% salt spray concentration 2.After completion of the above tests, the test samples should be left at room temperature for 2 hours. 检查 Check： 1.金属电镀件表面镀层应无明显发暗，无鼓泡、脱落、龟裂、露底等缺陷； 2.铝或铝合金镀阳极氧化膜表面无白色腐蚀物； 铜或铜合金镀镍+铬表面无浅绿色腐蚀物； 锌或锌合金镀镍+铬表面无灰黑色腐蚀物及鼓泡； 1. The coating on the surface of metal electroplating parts shall be free from obvious darkening, bubbling, peeling, cracking, and other defects; 2. No white corrosion on the surface of anodic oxidation film of aluminum or aluminum alloy plating; Copper or copper alloy nickel + chromium plating surface without light green corrosion; Zinc or zinc alloy nickel + chromium plating surface without black corrosion and bubbling;

6、产品认证要求 Certification

序号 No.	项目 Item	规格 Specs
6.1	ROHS	符合 ROHS 2.0 要求。
6.2	FCC ID	
6.3	IC	
6.4	BQB	

四、产品效果图 Product Cosmetics drawing

NO.	A1	A2	A3	A4	A5
Component 组件	Keypad 按键	Keypad 塑胶按键	Top cover 面壳	Bottom cover 底壳	Battery cover 电池盖
Material 材质	Rubber/硅胶	ABS	ABS	ABS	ABS
Process 处理	Oil pressure 油压	Texture 晒纹(Nihon Etching HN-DS06)	Texture 晒纹(Nihon Etching HN-DS12)	Injection + High Glossy + Texture 注塑+抛光+晒纹 晒纹(Nihon Etching HN-DS12)	Injection + High Glossy + Texture 注塑+抛光+晒纹 晒纹(Nihon Etching HN-DS12)
Surface effect 表面处理	Graphic + soft tuch 丝印 + 手感油	Graphic 丝印	Graphic 丝印	High Glossy + Matte 镜面高光+哑面	High Glossy + Matte 镜面高光+哑面
Color	Rubber color: PANTONE BLACK C Graphic color: PANTONE 427 C	Injection color: PANTONE BLACK C Graphic color: PANTONE 427 C	Injection color: PANTONE BLACK C Graphic color: PANTONE 427 C	Injection color: PANTONE BLACK C	Injection color: PANTONE BLACK C

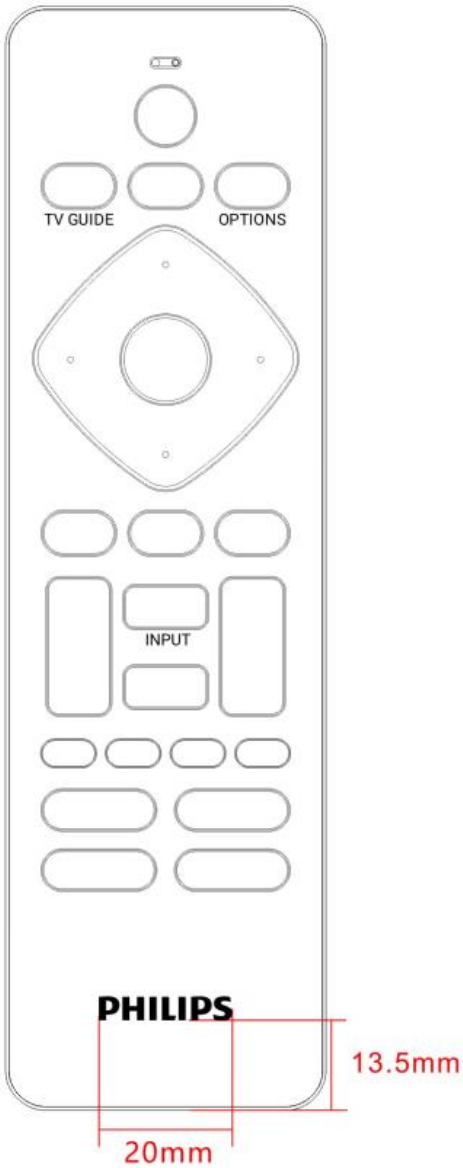

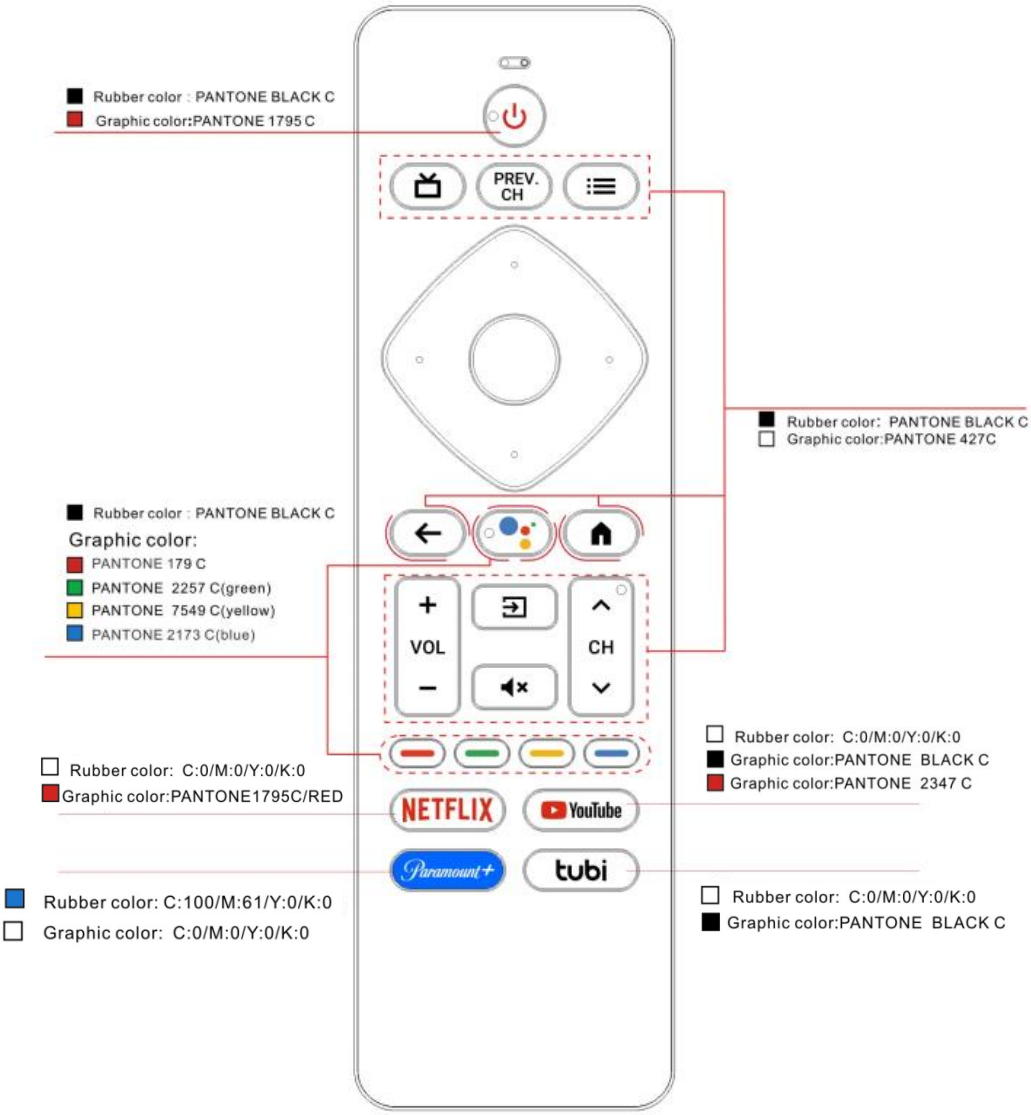

PHILIPS
LOGO尺寸：20*3.7mm
LOGO左右居中

Injection :PANTONE BLACK C
Graphic color:PANTONE 427C

Injection color:
PANTONE BLACK C
Graphic color:
PANTONE 427 C

五、按键码值 Code Table

Peak Wavelength	TYP 940nm
Format	RC6 format: In addition to specification of “RC6 mode 0”, the followings should also be satisfied.
Carrier Frequency	36kHz ±0.36kHz
Duty	33%

[Mic. Key] Paired : send key-code by BLE Unpaired : send key-code by IR

[the other Keys] send key-code by IR

Philips RCU Code Table						
Position	No.	Key name	IR	BLE	USB HID Usage Name	
			RC6 format Mode = 0, Custom=0x00	Parameters (Usage ID)	Consumer Page (0x0C)	Keyboard Page (0x07)
	1	Power	0x0C	-	-	-
	2	GUIDE	0xCC	-	-	-
	3	PREV.CH	0x9F	-	-	-
	4	OPTIONS	0x40	-	-	-
	5	UP	0x58	-	-	-
	6	LEFT	0x5A	-	-	-
	7	OK	0x5C	-	-	-
	8	RIGHT	0x5B	-	-	-
	9	DOWN	0x59	-	-	-
	10	BACK	0x41	-	-	-
	11	Google Assistant	0xB6	0x0221	AC Search	-
	12	HOME	0x54	-	-	-
	13	VOL+	0x10	-	-	-
	14	SOURCE	0x38	-	-	-
	15	CH+	0x20	-	-	-
	16	VOL-	0x11	-	-	-
	17	MUTE	0x0D	-	-	-
	18	CH-	0x21	-	-	-
	19	RED	0x6D	-	-	-
	20	GREEN	0x6E	-	-	-

	21	YELLOW	0x6F	-	-	-
	22	BLUE	0x70	-	-	-
	23	NETFLIX	0x76	-	-	-
	24	YouTube	0x79	-	-	-
	25	Paramount+	0xB3	-	-	-
	26	tubi	0xB4	-	-	-
Combination & Long press	A01	[OK + BACK] For trigger Bug Report	0x83	-	-	-
	A02	[DOWN + BACK] For trigger Talk Back	0xDA	-	-	-
	A03	[OPTION + VOL-] Unpairing	0x7A			
	B01	release Key	-	0x0000	Unassigned	Reserved

六、产品功能 Software function

LED Pattern definitions(Orange) 指示	[Blink] 250ms ON / 250ms OFF ,提示蓝牙连接状态. [Fast Blink] 150ms ON / 150ms OFF, 提示遥控器在广播状态，BLE 未连接.
1. Normal keys click (except MIC)	[LED behavior] - LED turns on during pressing the keys
2.Pairing 配对	[Start] ① Press any buttons when bonding cache is NULL. ② Or Press and hold [Google Assistant] and [VOL-] key for 3 seconds [Pairing timeout] ① 30sec [LED behavior] - LED blink while pairing process - LED fast blink **5** times when pairing completion
3.UnPairing 取消配对	[Start] - Press and hold [OPTION] and [VOL-] key for 3 seconds [LED behavior] - LED keep to light up fast blink **9** times when UnPairing completion [Code sending] - Send code: 0x7A by IR for 3 seconds when UnPairing completion
4.Device Bonding	-Remote only supports one bonded host -Existing bond severed only after the new bonding is successfully completed

	-Unpairing from the Host clears bonding cache -Operating Unpairing key function clears bonding cache
5.Voice search	[Start] - Push [Google Assistant] key [LED behavior] - LED turns on after ACK from host when voice search is ready - LED turns off after end of speech is detected from the host, or - LED turns off after 30 seconds of time out
6.Bug Report	[Start] - Output the key code during pressing and holding [OK] and [BACK] [Code sending] - Send code: 0x83 by IR
7.Talk Back (Accessibility shortcut)	[Start] - Output the key code during pressing and holding [DOWN] and [BACK] [Code sending] Send code: 0xDA by IR
8.BLE/IR Switching	[UnPaired status] * Same state as “2. Pairing ①”. - For MIC Button : IR send (0xB6) - For other Buttons : IR send - When any buttons press 1. Undirected Advertising : 30sec [Disconnected status] - For MIC Button : no operation - For other Buttons : IR send - When any buttons press 1. Reconnecting : 30sec [Connected status] - For MIC Button : BT send - For other Buttons : IR send
9.UVLO	If the RCU is in a low power state, it will shut down directly without warning (warning=LED blink). V_shutdown = 2.0V V_recovery = 2.3V

八、PCB 图纸 Board diagram (2Layer)

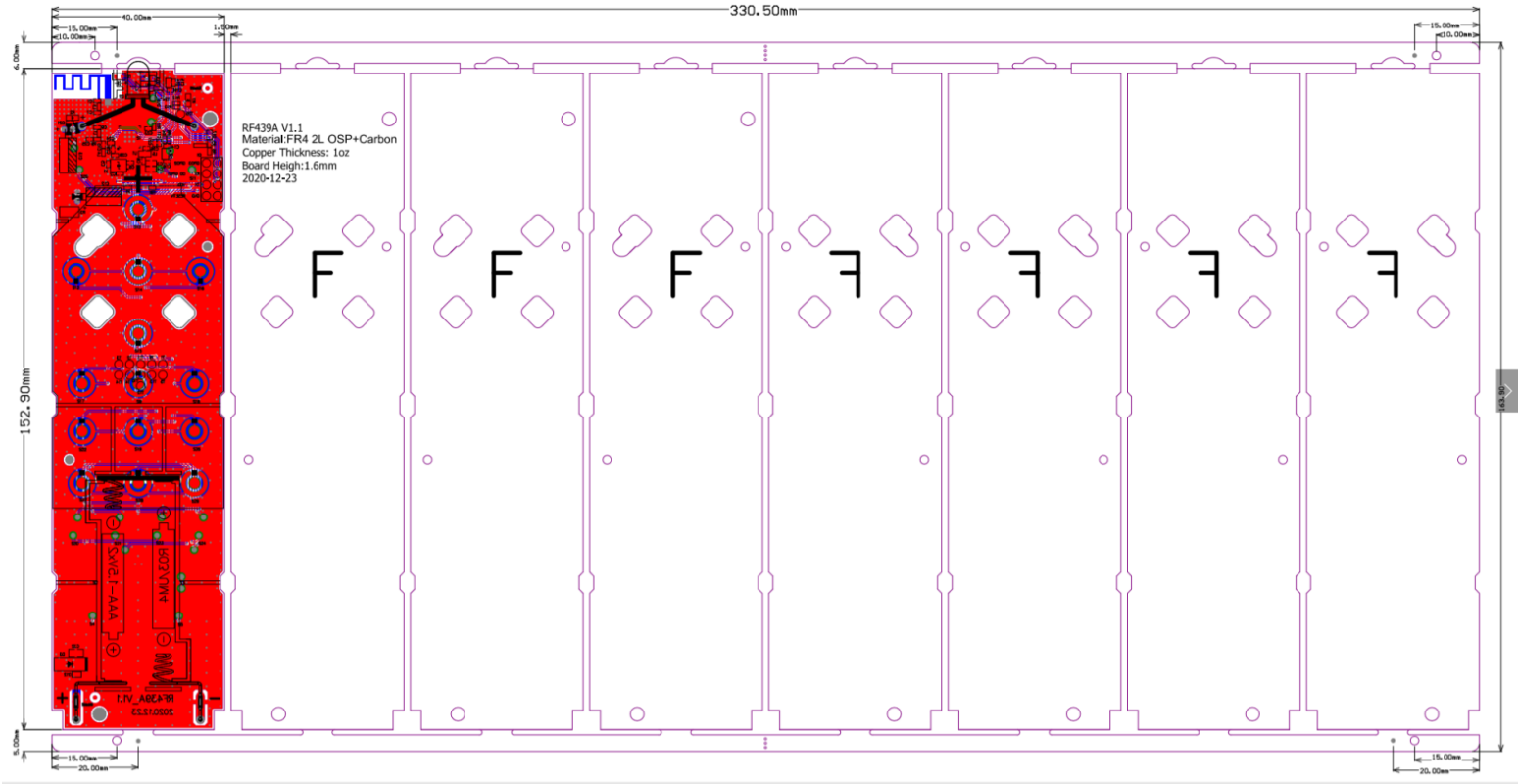

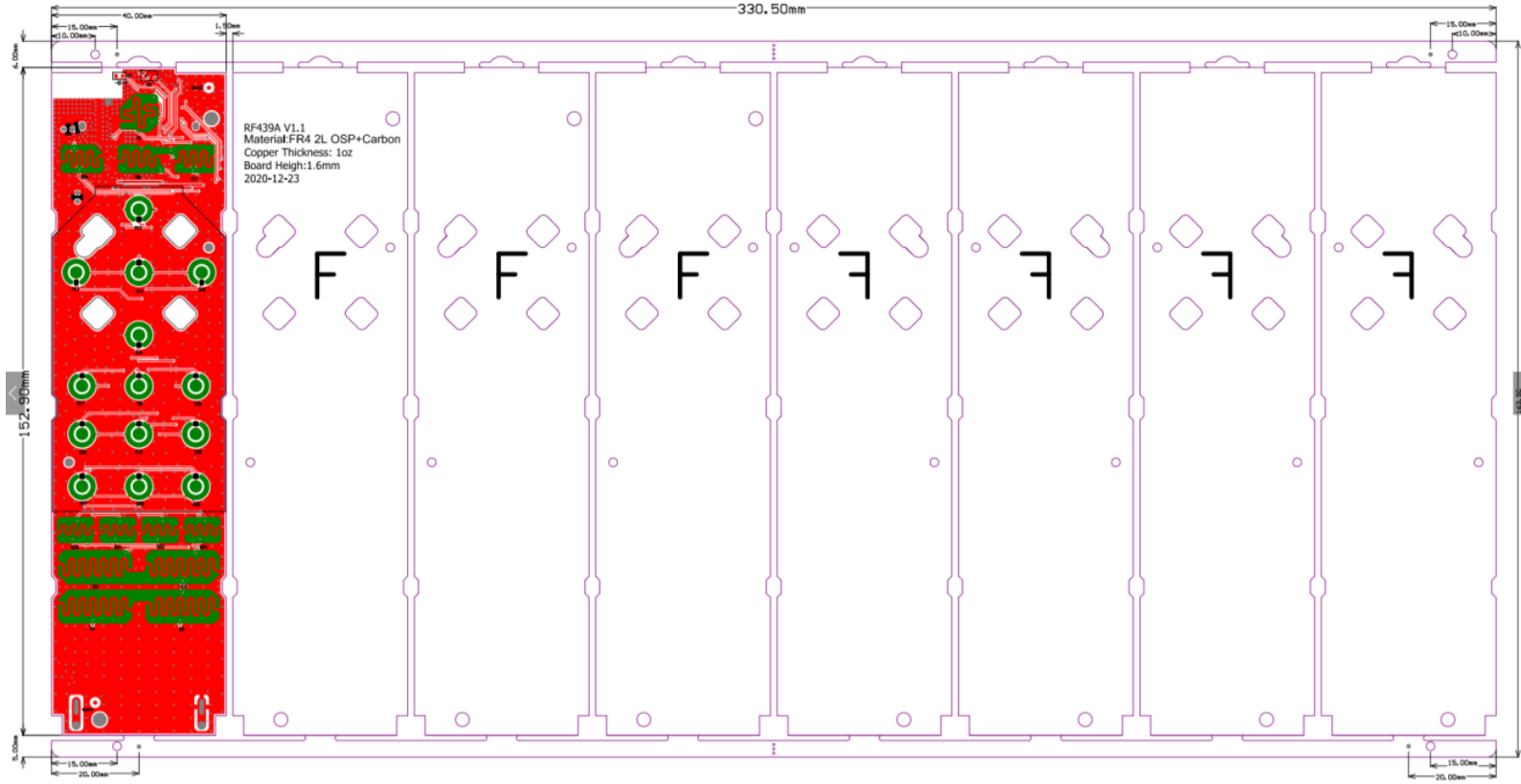

十、产品结构尺寸图纸 Product structure dimension drawing

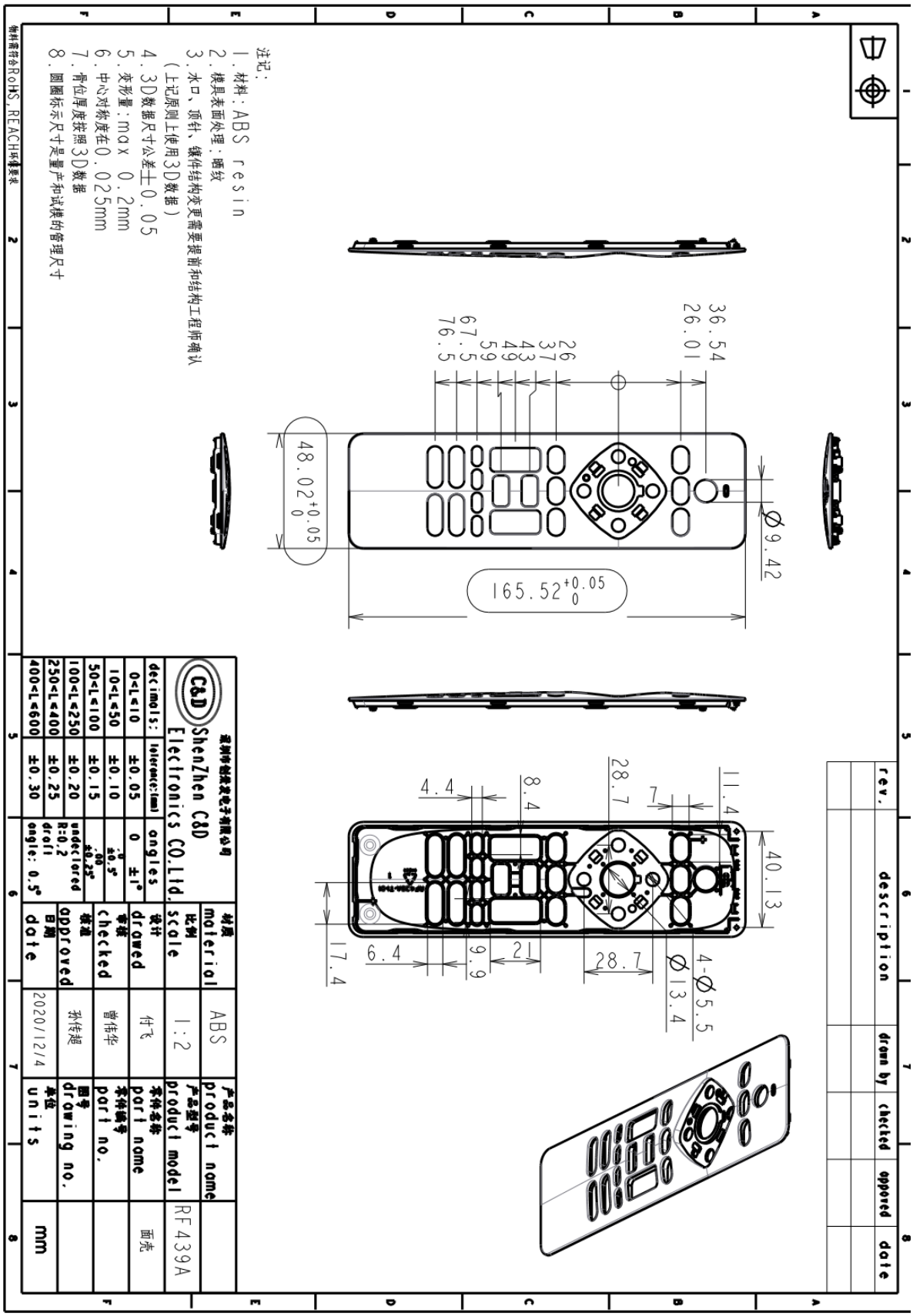

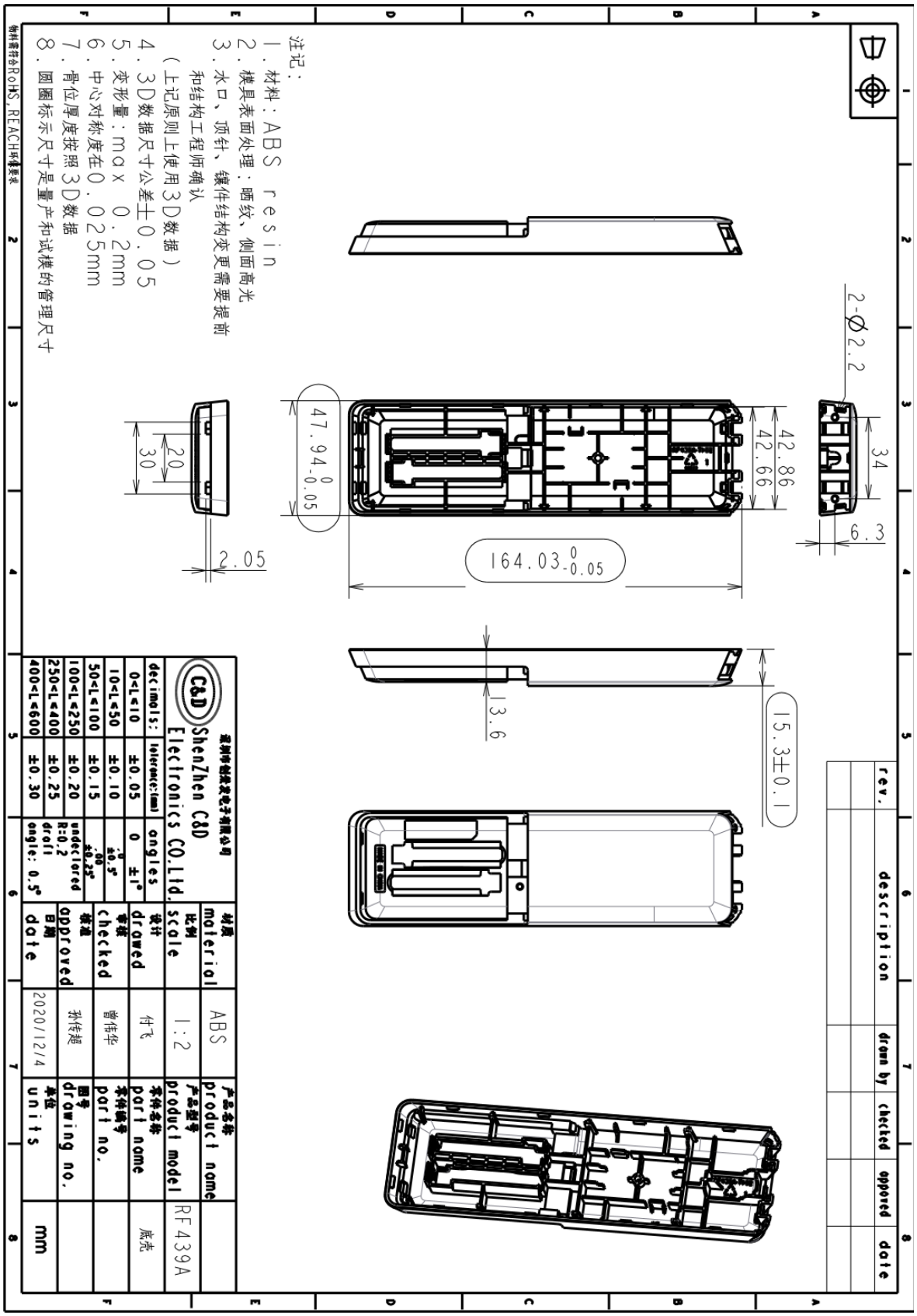
注记：
1. 材料：ABS resin
2. 模具表面处理：晒纹、侧面高光
3. 水口、顶针、镶件结构变更需要提前和结构工程师确认
（上记原则上使用3D数据）
4. 3D数据尺寸公差±0.05
5. 变形量：max 0.2mm
6. 中心对称度在0.025mm
7. 骨位厚度按照3D数据
8. 圆圈标示尺寸是量产和试模的管理尺寸
物料需符合RoHS,REACH环境要求
2-Ø2.2
34
6.3
42.86
42.66
47.94 0 -0.05
164.03 0 -0.05
20
30
2.05
13.6
15.3±0.1
rev.
description
drawn by
checked
approved
date
深圳市创荣发电子有限公司
C&D ShenZhen C&D Electronics CO.Ltd.
decimals: 0<L≤10 10<L≤50 50<L≤100 100<L≤250 250<L≤400 400<L≤600
tolerance(mm) ±0.05 ±0.10 ±0.15 ±0.20 ±0.25 ±0.30
angles 0 ±1° ±0.5° ±0.25°
undecolored R:0.2 draft angle: 0.5°
材质 material ABS
比例 scale 1:2
设计 drawed 付飞
审核 checked 曾伟华
核准 approved 孙传楷
日期 date 2020/12/4
产品名称 product name
产品型号 product model RF439A
零件名称 part name 底壳
零件编号 part no.
图号 drawing no.
单位 units mm

注记:
1. 材料:ABS resin
2. 模具表面处理:finish
3. 水口、顶针、镶件结构变更需要提前和结构工程师确认
(上记原则上使用3D数据)
4. 3D数据尺寸公差±0.05
5. 变形量:max 0.2mm
6. 中心对称度在0.025mm
7. 骨位厚度按照3D数据
8. 圆圈标示尺寸是量产和试模的管理尺寸
9. 物料需符合RoHS,REACH环保要求

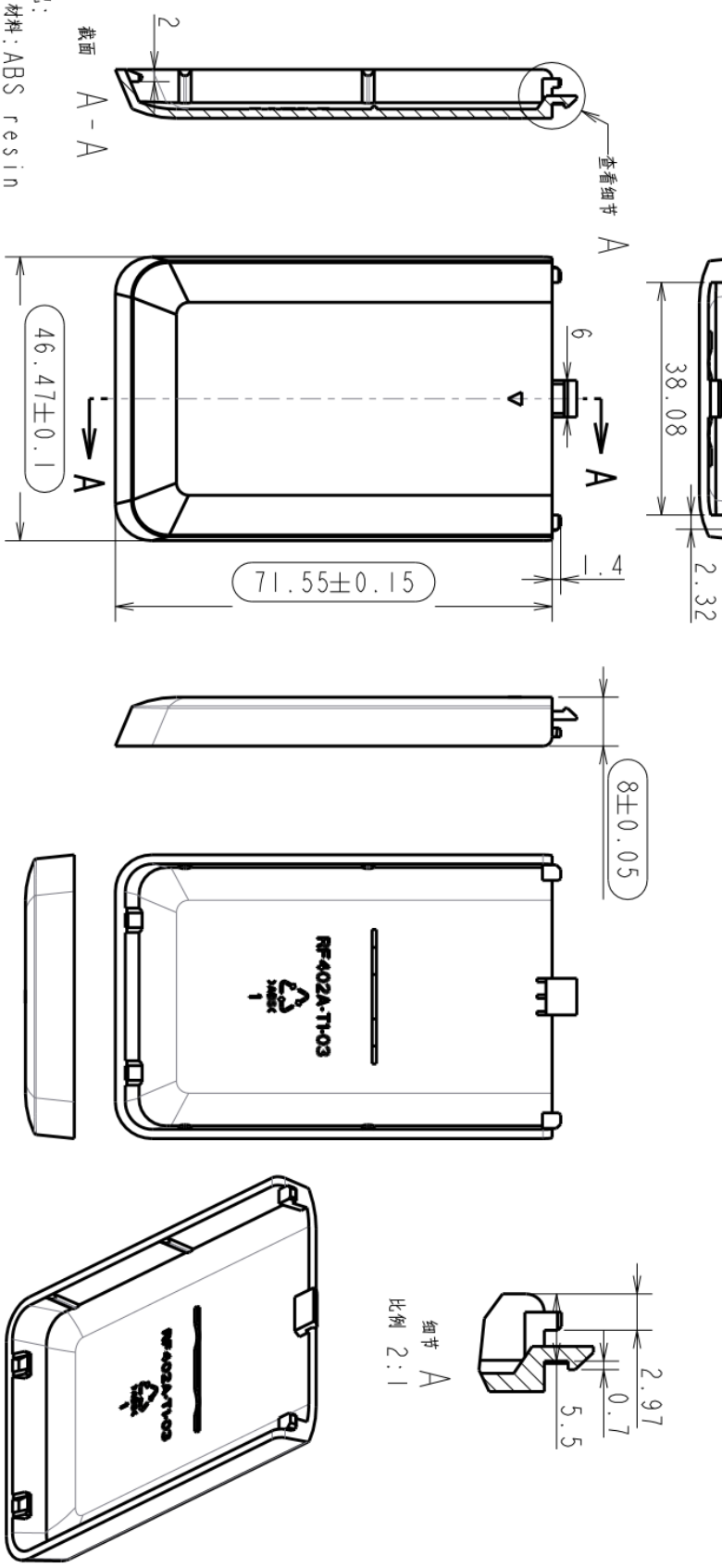

rev.	description	drawn by	checked	approved	date

decimals:	tolerance:(mm)	angles
0<L≤10	±0.05	0 ±1°
10<L≤50	±0.10	.0 ±0.5°
50<L≤100	±0.15	.00 ±0.25°
100<L≤250	±0.20	undeclared
250<L≤400	±0.25	R:0.2 draft angle: 0.5°
400<L≤600	±0.30	

深圳市创荣发电子有限公司
C&D ShenZhen C&D Electronics CO.Ltd.

材质 material	ABS	产品名称 product name	
比例 scale	1:1	产品型号 product model	RF402A
设计 drawed	付飞	零件名称 part name	电池盖
审核 checked	曾伟华	零件编号 part no.	
核准 approved	孙传超	图号 drawing no.	
日期 date	2020/06/05	单位 units	mm

注记:

1. 材料:ABS PA758 半透明黑色
2. 模具表面处理:高光
3. 水口、顶针、镶件结构变更需要提前和结构工程师确认
(上记原则上使用3D数据)
4. 3D数据尺寸公差±0.05
5. 变形量:max 0.2mm
6. 中心对称度在0.025mm
7. 骨位厚度按照3D数据
8. 圆圆标示尺寸是量产和试模的管理尺寸
9. 物料需符合RoHS,REACH环保要求

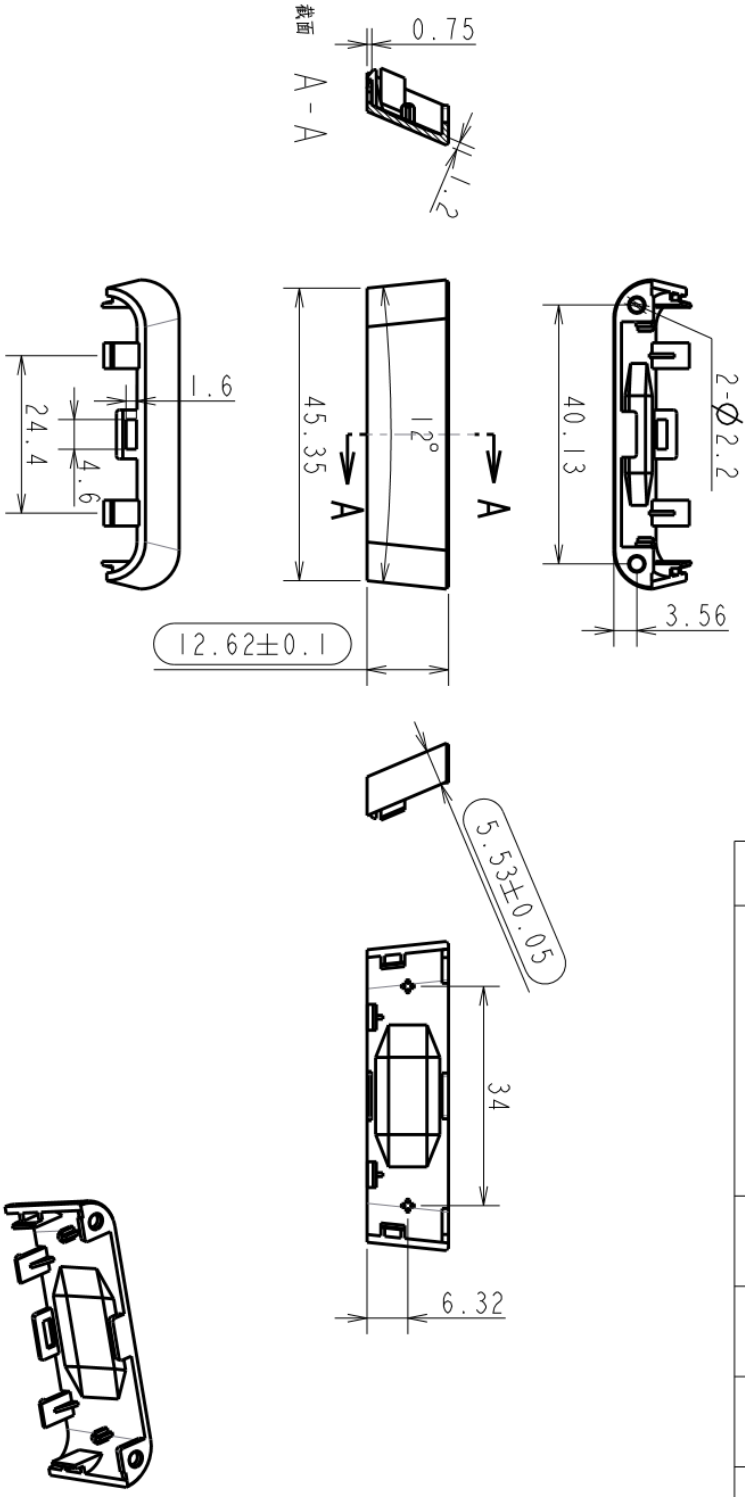

深圳市创荣发电子有限公司					
C&D ShenZhen C&D Electronics CO.Ltd.		材质 material	ABS	产品名称 product name	
		比例 scale	1:1	产品型号 product model	RF402A
		设计 drawed	付飞	零件名称 part name	滤光罩
		审核 checked	曾伟华	零件编号 part no.	
		核准 approved	孙传超	图号 drawing no.	
		日期 date	2019/12/10	单位 units	mm

decimals:	tolerance:(mm)	angles
0<L≤10	±0.05	0 ±1°
10<L≤50	±0.10	0 ±0.5°
50<L≤100	±0.15	0 ±0.25°
100<L≤250	±0.20	undeclared R:0.2 draft angle: 0.5°
250<L≤400	±0.25	
400<L≤600	±0.30	

rev.	description	drawn by	checked	approved	date

注记:
1. 材料:ABS resin
2. 模具表面处理:finish
3. 水口、顶针、镶件结构交更需要提前和结构工程师确认
(上记原则上使用3D数据)
4. 3D数据尺寸公差±0.05
5. 变形量:max 0.2mm
6. 中心对称度在0.025mm
7. 骨位厚度按照3D数据
8. 圆圈标示尺寸是量产和试模的管理尺寸
9. 物料需符合RoHS,REACH环保要求

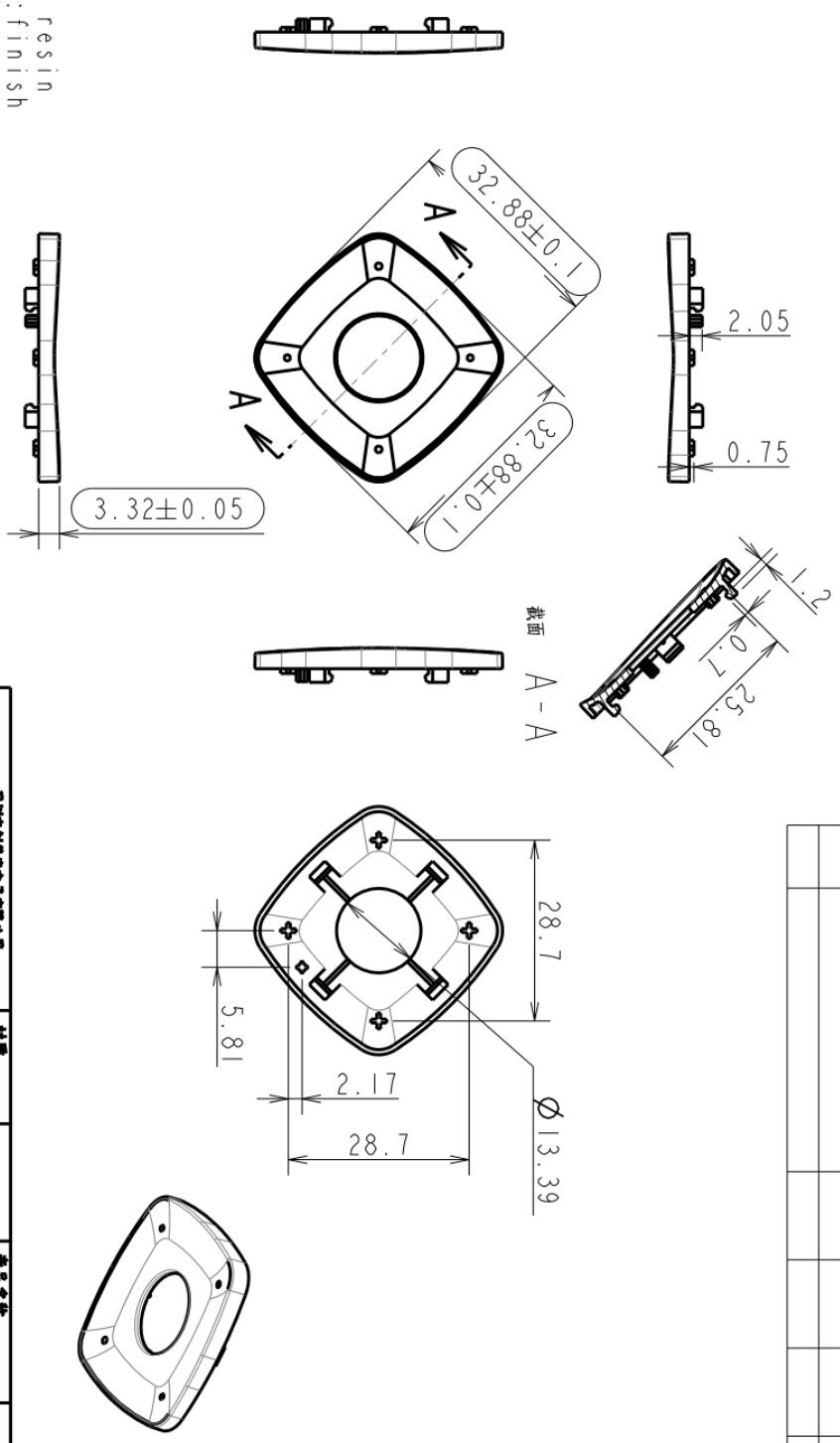

rev.	description	drawn by	checked	approved	date

深圳市创荣发电子有限公司
C&D ShenZhen C&D Electronics CO.Ltd.

decimals:	tolerance:(mm)	angles	
0<L≤10	±0.05	0	±1°
10<L≤50	±0.10	0	±0.5°
50<L≤100	±0.15	0	±0.25°
100<L≤250	±0.20	undeclared R:0.2 draft angle: 0.5°	
250<L≤400	±0.25		
400<L≤600	±0.30		

材质 material	ABS	产品名称 product name	
比例 scale	1:1	产品型号 product model	RF402A
设计 drawed	付飞	零件名称 part name	方向键
审核 checked	曾伟华	零件编号 part no.	
核准 approved	孙传超	图号 drawing no.	
日期 date	2019/12/9	单位 units	mm

深圳市创荣发电子有限公司
SHENZHEN C&D ELECTRONICS CO., LTD.

rev.	description	drawn by	checked	oppoved	date

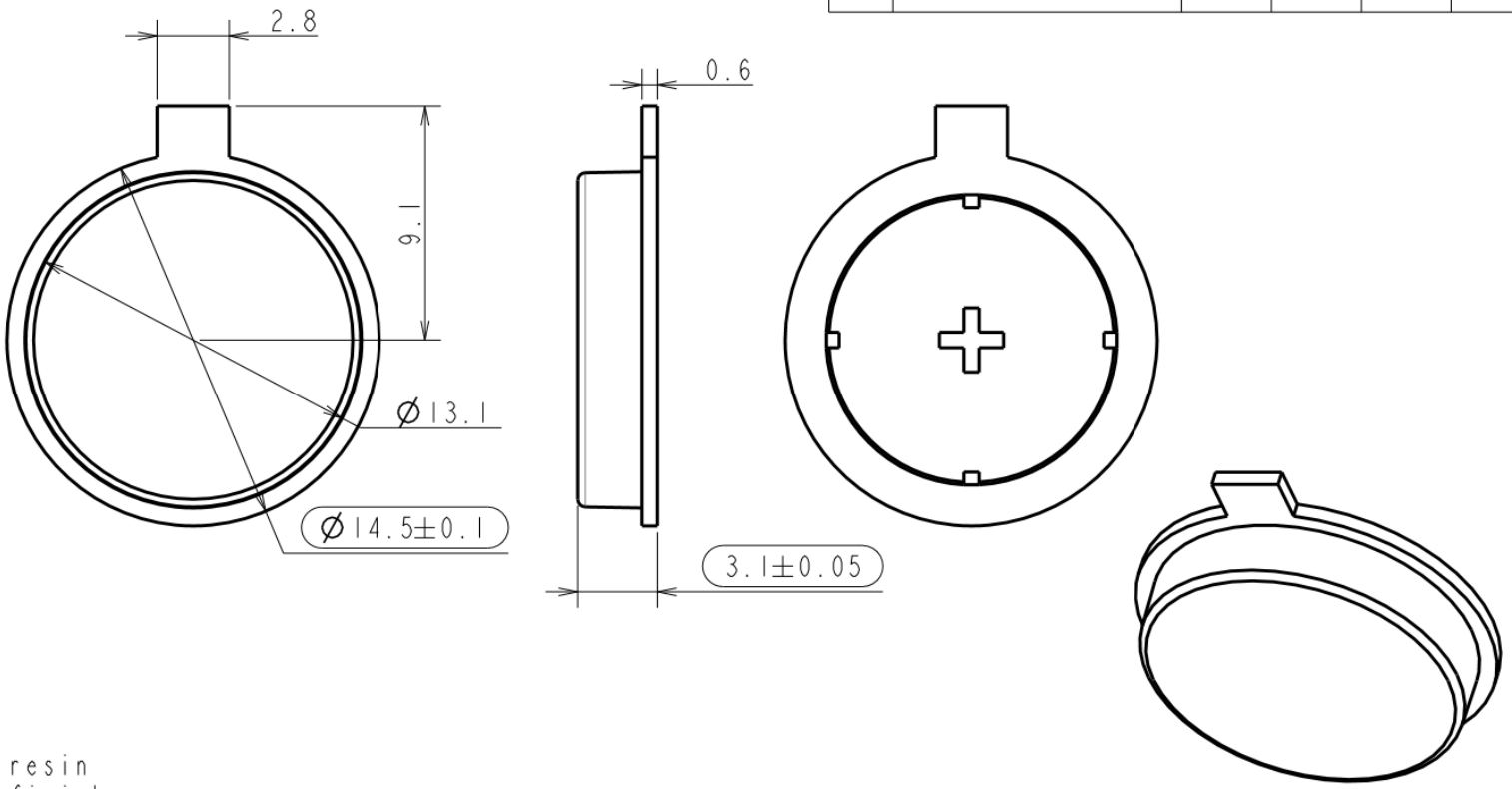

注记：
1. 材料：ABS resin
2. 模具表面处理：finish
3. 水口、顶针、镶件结构变更需要提前和结构工程师确认
（上记原则上使用3D数据）
4. 3D数据尺寸公差±0.05
5. 变形量：max 0.2mm
6. 中心对称度在0.025mm
7. 骨位厚度按照3D数据
8. 圆圈标示尺寸是量产和试模的管理尺寸
9. 物料需符合RoHS，REACH环保要求

深圳市创荣发电子有限公司 ShenZhen C&D Electronics CO.Ltd.			材质 material	ABS	产品名称 product name	
			比例 scale	4:1	产品型号 product model	RF402A
decimals:	tolerance:(mm)	angles	设计 drawed	付飞	零件名称 part name	OK键
0<L≤10	±0.05	0 ±1°	审核 checked	曾伟华	零件编号 part no.	
10<L≤50	±0.10	.0 ±0.5°	核准 approved	孙传超	图号 drawing no.	
50<L≤100	±0.15	.00 ±0.25°	日期 date	2019/12/9	单位 units	mm
100<L≤250	±0.20	undeclared R:0.2 draft angle: 0.5°				
250<L≤400	±0.25					
400<L≤600	±0.30					

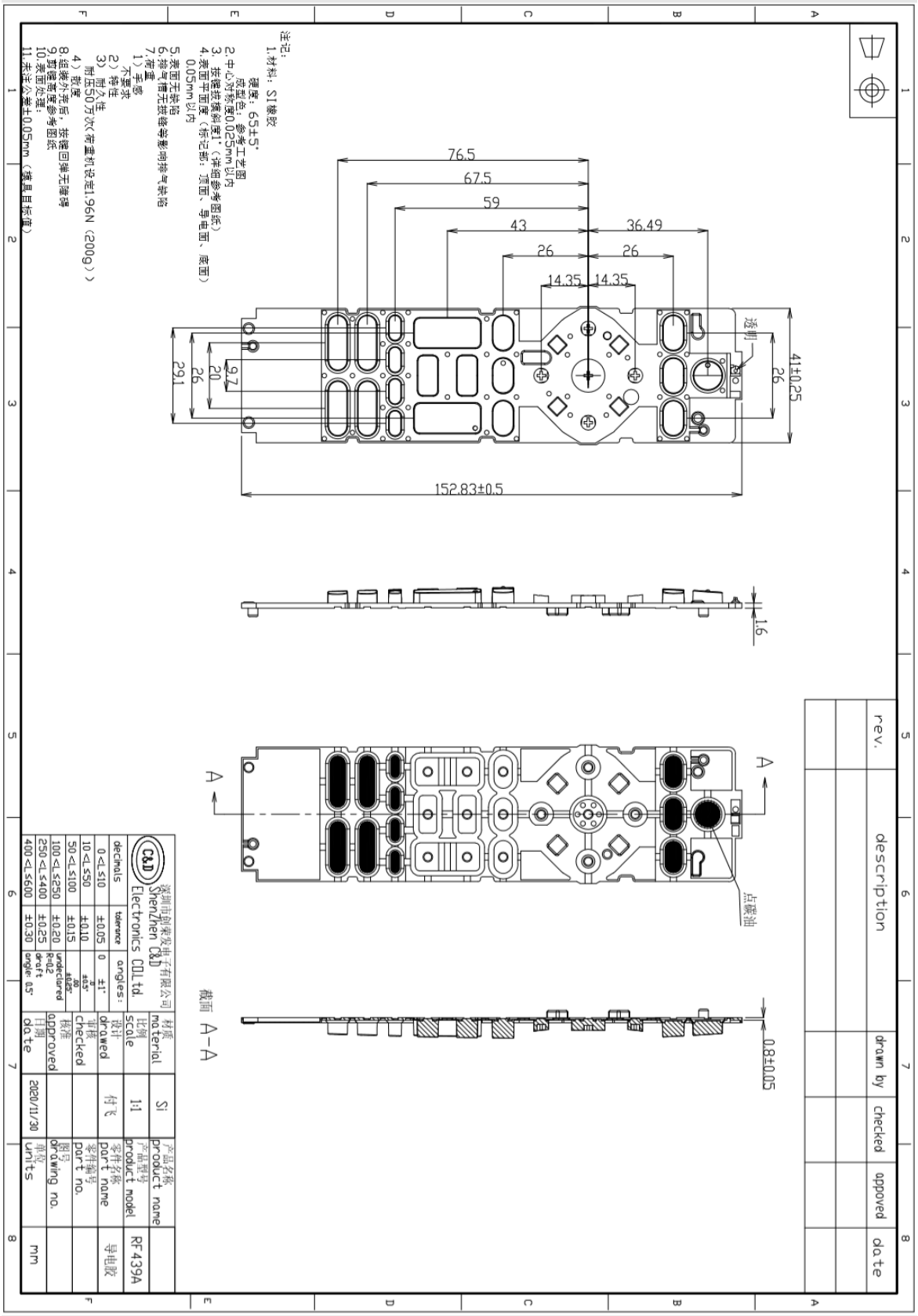
注记:
1.材料: SI橡胶
硬度: 65±5°
成型色: 参考工艺图
2.中心对称度0.025mm以内
3. 按键拔模斜度1°(详细参考图纸)
4.表面平面度(标记部: 顶面、导电面、底面)
0.05mm以内
5.表面无缺陷
6.排气槽无拔锥等影响排气缺陷
7.荷重
1) 手感
不要求
2) 特性
3) 耐久性
耐压50万次(荷重机设定1.96N (200g))
4) 散度
8.组装外壳后, 按键回弹无障碍
9.剪键高度参考图纸
10.表面处理:
11.未注公差±0.05mm (模具目标值)
76.5
67.5
59
43
36.49
26
26
14.35
14.35
透明
41±0.25
26
29.1
26
20
9.7
152.83±0.5
1.6
点碳油
0.8±0.05
截面 A-A
rev.
description
drawn by
checked
appoved
date
深圳市创荣发电子有限公司
ShenZhen C&D Electronics CO.Ltd.
decimals
tolerance
angles:
0<L≤10
±0.05
0
±1°
10<L≤50
±0.10
±0.5°
50<L≤100
±0.15
±0.25°
100<L≤250
±0.20
undeclared
250<L≤400
±0.25
R=0.2
400<L≤600
±0.30
draft
angle: 0.5°
材质 material
Si
比例 scale
1:1
设计 drawed
付飞
审核 checked
核准 approved
日期 date
2020/11/30
产品名称 product name
产品型号 product model
RF439A
零件名称 part name
零件编号 part no.
图号 drawing no.
单位 units
mm
导电胶

十一、产品包装示意图 Packaging diagram

1、Certification label:

FCC ID:XXX-RF439A
IC:XXXXX-RF439A Lot-No:00001
FW:RF439A-XXX Prod.Date:05/21

1： 1

FCC ID:XXX-RF439A
IC:XXXXX-RF439A Lot-No:00001 → 00001为流水号
FW:RF439A-XXX Prod.Date:05/21 → 05/21 代表周/年

1： 2

每批会变请联系采购确认

尺寸 29.5mm×7.5mm
材质：128g 不干胶，光面，附膜
条形码类型：Code 128

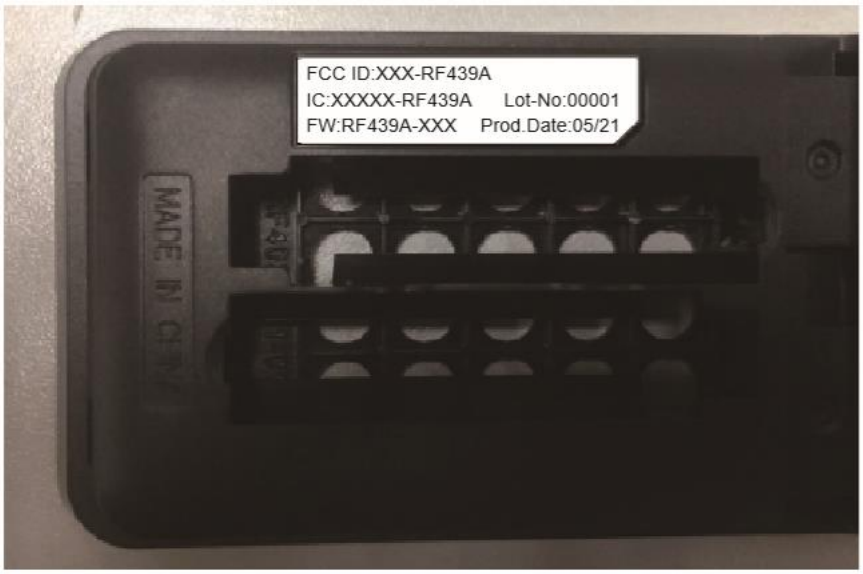

2、QR code label:

2:1

条形码类型 QRCode

二维码 PE袋封口贴
尺寸：30x15mm
材质：铜版纸

本厂打印

联系客服

1:1

二维码扫描显示内容：
Funai P/N;C&D P/N;Assembly date;Serial No
(URMT26CND001;135439A0001;2021XXXX;00000001)

(从00000001开始，同型号一直顺延)

贴附位置

深圳市创荣发电子有限公司
SHENZHEN C&D ELECTRONICS CO., LTD.

编 号: RF439A
时 间: 2021/02/02

包材尺寸图:
Package material size photos:

1.

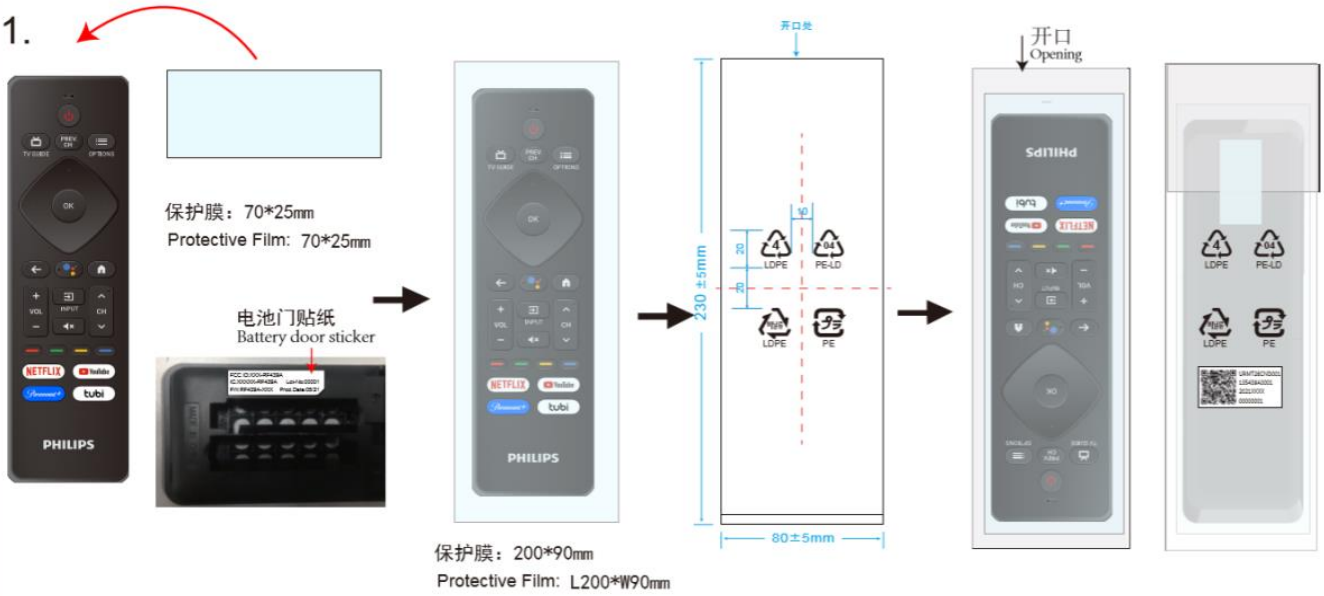

2.

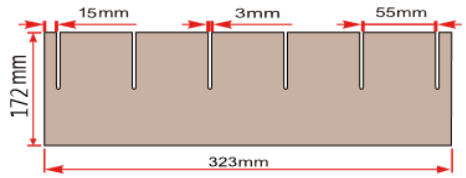

尺寸：323x172mm　材质：K3K　用量：11/100

Size: W323*H172mm　Material: K3K　Usage: 11/100

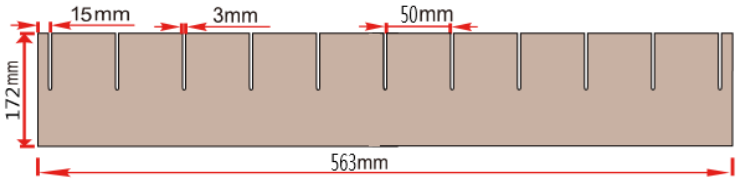

尺寸：563x172mm、材质：K3K　用量：6/100

Size: W563*H172mm　Material: K3K　Usage: 6/100

尺寸：563x323mm
材质：K3K 用量：2/100

Size: L563*W323 mm
Material: K3K
Usage: 2/100

3.

背靠背，遥控器朝上
Back to back, remote control up

2pcs遥控器入一个卡槽
2pcs remote control, put into a card slot

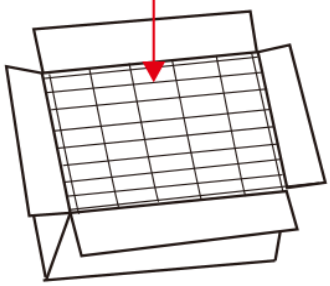

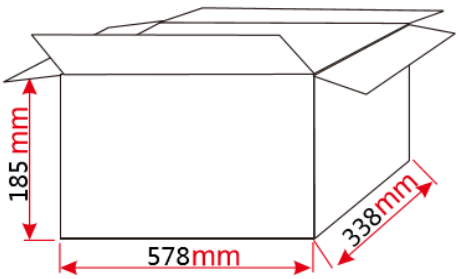

包装箱尺寸：578x338x182mm
材质：K=A　用量：1/100 PCS
Size: L578*W338*H182mm K=A
Usage: 1/100pcs

制定：Drafted	刘阿敏	审核：Checked	华振飞	批准：Approved	孙传超

十二 QC 流程图 QC Flow Chart

深圳市创荣发电子有限公司 Shenzhen C&D Electronics Co., Ltd.
惠州市创荣发实业有限公司 Huizhou C&D Industry Co.,Ltd.

QC流程图 QC Flow Chart

产品机型Item no:RF439A

文件编号: Document No. WI-品- 版本:A/0 Version: 日期Date: 2021年3月19日

工艺流程图 Process Flow Chart	Out Source	序号 No.	工序名称 Process Name	材料名称 Meterial Name	Production equipment: Equipment	Production equipment: Control item	检验项目 Inspection Item	检验方式 Inspection Method: 检测频率 Testing Frequency	检验方式 Inspection Method: 检验工具 Inspection Tool	文件/记录 Record: 检验依据 Inspection fundation	文件/记录 Record: 记录 Record	反应计划 Feedback Plan	责任部门 Responsible Department	责任人 Person in Charge	备注 Note
进料 pull in material from each vendor	Parts Vendor	1	材料验收 Material inspection and acceptance				材料确认 confirm meterial item	/	目 视 Visual check	送货单/订购单 Delivery note/order form	验收单/帐册 Acceptance slip/account book	重新送货 Reshipment	供应商 supplier	送货员 Delivery man	
							点数验收 confirm quantity	全检 confirm each item this model used	电子称 Electronic scale	送货单/订购单 Delivery note/order form					
				导电胶 Rubber			外观、尺寸、手感力度、气味、丝印附着力、碳油阻值、ROHS Appearance, size, touch strength, odor, silk screen adhesion, carbon oil resistance, ROHS	物料抽样计划 Material Sampling Plan Major:AQL0.4 Minor:AQL1.0	目视、测厚规、硬度测试仪、3M胶纸、酒精 Visual inspection, thickness gauge, hardness tester, 3M adhesive tape, alcohol,Multimeter	导电胶检验规范 & 工程样板/承认书 Conductive adhesive inspection specification & engineering model / recognition book					
				PCB			外观、尺寸、碳油阻值、碳油附着力、板材平整度、可靠性、ROHS Appearance, size, carbon oil resistance, carbon and oil adhesion, sheet flatness, reliability, ROHS	物料抽样计划 Material Sampling Plan Major:AQL0.4 Minor:AQL1.0	目视、卡尺、电烙铁、万用表、塞规、酒精、3M胶纸、玻璃、灯光治具 Visual, caliper, soldering iron, multimeter, plug gauge, alcohol, 3M adhesive tape, glass, lighting fixture.	PCB检验规范 & 工程样板/承认书 PCB Inspection Specification & Engineering Template / Recognition Book					
				锅仔片 metal dome			外观、尺寸、弹力、接触阻值、ROHS Appearance, size, elasticity, contact resistance, ROHS	物料抽样计划 Material Sampling Plan Major:AQL0.4 Minor:AQL1.0	目视、卡尺、万用表、弹力测试仪 Visual, caliper, multimeter, elastic tester	检验规范 & 工程样板/承认书 Inspection Specification & Engineering Template / Recognition Book					
				IC			外观、可焊性、功能、ROHS Appearance, weldability, function, ROHS	物料抽样计划 Material Sampling Plan Major:AQL0.4 Minor:AQL1.0	目视、铬铁、功能测试治具 Visual, ferrochrome, functional test fixture	IC检验规范 & 工程样板/承认书 IC Inspection Specification & Engineering Model / Recognition Book					
NG				电阻 resistance			外观、性能参数、可焊性、抗焊性、ROHS Appearance, performance parameters, solderability, solder resistance, ROHS	物料抽样计划 Material Sampling Plan Major:AQL0.4 Minor:AQL1.0	目视、锡炉、LCR Visual, solder pot, LCR	电阻检验规范 & 工程样板/承认书 Resistor Inspection Specification & Engineering Template/Recognition Book	物料检验记录表 Material	退货或特采 Reject or	仓库/品质部 Warehouse /	仓管/IQC Warehouse	依AQL收料，需特采的物料由PMC提清MRB申请经会签后结果生效 According to the receipt of AQL, the
1		2	来料检验 Incoming												

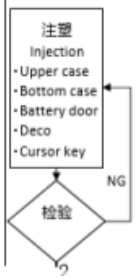

IQC检验 IQC inspection	2	Incoming inspection	电容 capacitance			外观、性能参数、可焊性、ROHS Appearance, performance parameters, weldability, ROHS	物料抽样计划 Material Sampling Plan Major:AQL0.4 Minor:AQL1.0	目视、锡炉、LCR Visual, solder pot, LCR	电容检验规范&工程样板/承认书 Capacitance Inspection Specification & Engineering Model / Recognition Book	Inspection Record	approve conditionally	Quality Department	Management/IQC	material that needs approve conditionally is submitted by the PMC to the MRB for verification
			发射管 IR LED			外观、功能参数、可焊性、ROHS Appearance, function parameters, weldability, ROHS	物料抽样计划 Material Sampling Plan Major:AQL0.4 Minor:AQL1.0	目视、锡炉、LCR Visual, solder pot, LCR	发射管检验规范&工程样板/承认书 Launch tube inspection specification & engineering model/recognition book					
			三极管 Transistor			外观、功能参数、可焊性、ROHS Appearance, function parameters, weldability, ROHS	物料抽样计划 Material Sampling Plan Major:AQL0.4 Minor:AQL1.0	目视、锡炉、万用表 Visual, solder furnace, transistor tester	晶体管检验规范&工程样板/承认书 Transistor Inspection Specification & Engineering Template/Recognition Book					
			连簧 spring Connector			外观、尺寸、ROHS Appearance, size, weldability, ROHS	物料抽样计划 Material Sampling Plan Major:AQL0.4 Minor:AQL1.0	目视、卡尺 Visual, caliper, soldering iron	电极检验规范&工程样板/承认书 Electrode Inspection Specification & Engineering Template / Recognition Book					
			正负极弹簧 Positive and negative springs			外观、尺寸、可焊性、ROHS Appearance, size, weldability, ROHS	物料抽样计划 Material Sampling Plan Major:AQL0.4 Minor:AQL1.0	目视、卡尺、烙铁 Visual, caliper, soldering iron	电极检验规范&工程样板/承认书 Electrode Inspection Specification & Engineering Template / Recognition Book					
	3	注塑 Injection	底面壳、电池门 (1)Upper case, (2)Bottom case (3)Battery door (4)Deco (5)Cursor key (6)LED surpport	Injection machine	Temperature, Pressure, Time, Speed	SOP、注塑参数、外观、尺寸、互配实装、跌落 SOP, Injection Parameters, Appearance, Size, Mutual Assembly, Drop test	首件3PCS ≥10PCS/HR First 3PCS ≥10PCS/HR	目视、卡尺 Visual, caliper	注塑类检验规范&工程样板、SOP、规格书 Injection Inspection Specification & Engineering Model, SOP, Specification	IPQC首件记录、巡检记录 IPQC first unit record, inspection record	重工 rework	注塑部 Injection Department	作业员 operator	

深圳市创荣发电子有限公司
SHENZHEN C&D ELECTRONICS CO., LTD.

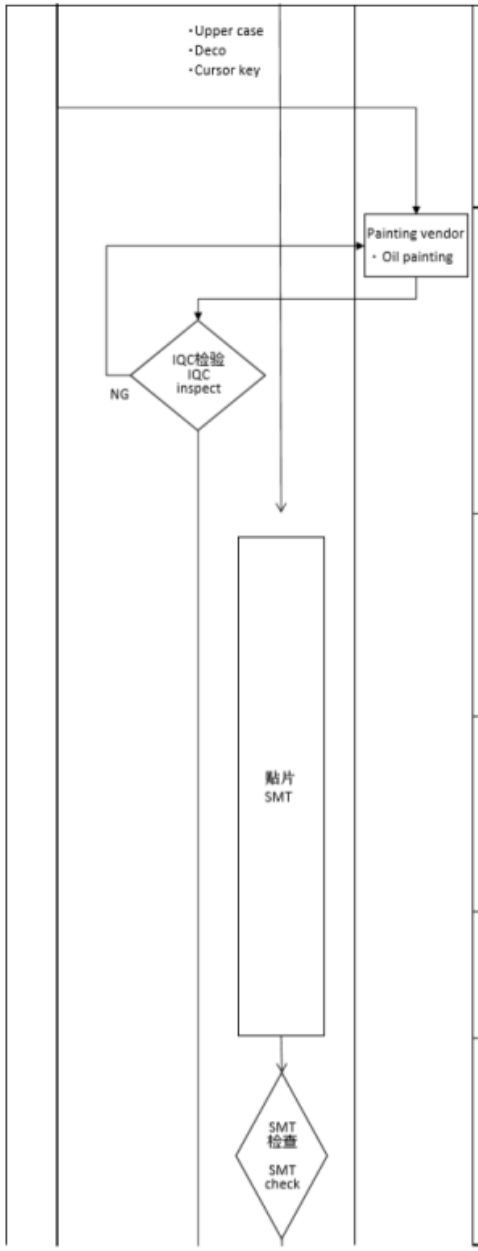

4	Removing burr *in the case there is burr	*SHOULD be no burr on the edge of plastic part -->Dull the burr on the side edge of the Deco with a metal stick			批锋≤0.1mm.(组装后≤0.2mm) burr height must be≤0.1mm in case(after assly, burr must≤ 0.2mm)	≥20PCS/HR	目视、卡尺 Visual, caliper	注塑类检验规范&工程样板 specification for injection parts and sample signed by ME	IPQC首件记录、巡检记录 IPQC first unit record, inspection record				
5	Incoming inspection or secondary processing inspection 加工件进料检验	painting upper case printing deco and cursor key 丝印按键 喷油外壳			SIP、外观、尺寸、互配实装、跌落、表面附着力。 Injection Parameters, Appearance, Size, Assembly, Drop test,surface adhesive force	物料抽样计划 Material Sampling Plan Major;AQL0.4 Minor:AQL1.0	目视、卡尺、污点卡、耐磨测试机 Visual, caliper	工程样板、SIP、规格书 Injection Inspection Specification & Engineering Model, SOP, Specification	物料检验记录表 Material Inspection Record	退货或特采 Reject or approve conditionally	仓库/品质部 Warehouse / Quality Department	仓管/IQC Warehouse Management/IQC	依AQL收料，需特采的物料由PMC提请MRB申请经会签后结果生效 According to the receipt of AQL, the material that needs approve conditionally is submitted by the PMC to the MRB for verification
6	SMT	刷锡膏 Print solder cream	印刷钢网 Metal mask, Printing machine	印刷机的温度、湿度、速度 Temperature, Humidity,Squeegee speed	钢网张力、锡膏厚度、锡膏储存温度、锡膏回温条件温度 metal mask tension,thickness of tin,temperature of tin storage,	首件检查 First unit check	锡膏厚度测试仪 tin thickness test equipment	钢网张力测试仪作业指导书；锡膏、锡线、红胶管理规定 metal mask tension SOP; Tin cream,solder,red gun management regulation	IPQC首件记录、巡检记录、锡膏厚度CPK报告、锡膏回温记录 IPQC first unit product record, inspection record	重工 rework	装配部 assembling department	作业员 operator	
7	SMT	贴片 SMT	Surface mounter		无错件、少件、反向，锡点无连锡、翘件、少锡、虚假焊、ESD no missing component, no omit, no reverse,no turnup,no less solder,no poor connect, ESD	物料抽样计划 Material sampling plan	目视、万用表、放大镜 visual inspection,AVO meter, magnifier	贴片机管理规范SOP Paste Management Specification, Press Management Specification, Reflow Profile, SOP	IPQC首件记录、巡检记录 IPQC first unit product record, inspection record	重工 rework	装配部 assembling department	作业员 operator	
8	SMT	回流焊 reflow	回流焊设备 reflow stove		回流焊温度、转速时间、元件焊接质量。 Temperature, revolving speed, soldering quality of components	≥20PCS/HR	/	电脑、炉温记录 computer, stove temperature record	IPQC首件记录、巡检记录 IPQC first unit product record, inspection record	重工 rework	装配部 assembling department	作业员 operator	
9	SMT 检查 SMT check	贴片检验 AOI SMT inspection AOI	AOI machine		无错件、少件、反向，锡点无连锡、翘件、少锡、虚假焊、ESD no missing component, no omit, no reverse, no short,seesaw, less solder, no poor connect, ESD	物料抽样计划 Material sampling plan	目视、放大镜、AOI visual inspection, magnifier,AOI	ESD管控规范、锡点检验规范、SOP ESD SPEC,soldering point check spec, SOP	IPQC首件记录、巡检记录 IPQC first unit product record, inspection record	重工 rework	装配部 assembling department	检验员 Inspector	

深圳市创荣发电子有限公司
SHENZHEN C&D ELECTRONICS CO., LTD.

	贴锅仔片片 Paste metal dome	10	PCBA	锅仔片 metal dome 1.45*44mm 2.44*11.8mm	PCB板清洁治具 PCB cleaning jig		锅仔片定位不偏移，PCB板表面无物 metal dome position approprate, there is no impurities on PCB surface	≥20PCS/HR	目视、静电环、SOP visual,ESD wrist strap,sop	SOP作业指导书	IPQC首件记录、巡检记录 IPQC first unit product record, inspection record	重工 rework	装配部 assembling department	作业员 operator	
	分板 cut PWB sheet	11	PCBA	PCB板 PCB	分板机 Slicer		板边平整、不可切到PCB板线路或元件 there is no god ear and must be smooth on the edge of PCB, Cut or damage components are not allowed	≥20PCS/HR	静电环 ESD wrist strap	SOP作业指导书	IPQC首件记录、巡检记录 IPQC first unit product record, inspection record	重工 rework	装配部 assembling department	作业员 operator	
	装板 Set PCB to a jig	12	PCBA	固定PCB fix PCB	波峰锡治具 wave-soldering jig		治具固定夹是否良好、PCB板与治具是否装到位、PCB板翘起不松动、PCB板方向位置正确（PCB板除锡点其它不可露出）。 To check if the clips on jig is well; to check if PCB fit well with jig; To check if PCB had turn up or loose; To check if PCB direction, position is right or not	≥20PCS/HR	静电环 ESD wrist strap	SOP作业指导书	IPQC首件记录、巡检记录 IPQC first unit product record, inspection record	重工 rework	装配部 assembling department	作业员 operator	
	插件（发射管、电容、弹簧） insert(LEDS, CAP, spring)	13	**PCBA**	插件 insert LEDs, CAP, spring			发射管电容方向、元件与PCB板指定位置、元件安装到位、元件与夹板固定良好。 To check components direction; Check the specific position beween components and PCB; Check if the components had fixed well on PCB	≥20PCS/HR	目视、静电环 visual inspection, magnifier	ESD管控规范、SOP ESD control standard, tin point inspection standard	IPQC首件记录、巡检记录 IPQC first unit product record, inspection record	重工 rework	装配部 assembling department	作业员 operator	
	焊接 solding						焊点检验SOP（关键点：ESD管控/正、负极装贴PCBA，位置不可错误，且无生锈、变形现象；锡点要润湿良好、饱满、光亮，不能有假焊、连锡不良，焊接圆锡点包围零件脚270°以上，反面透锡不小于75% /锅仔片表面无脏污，不可移位/ 无焊接不良、焊点高度≤1.5mm）不良品做好标识隔离								

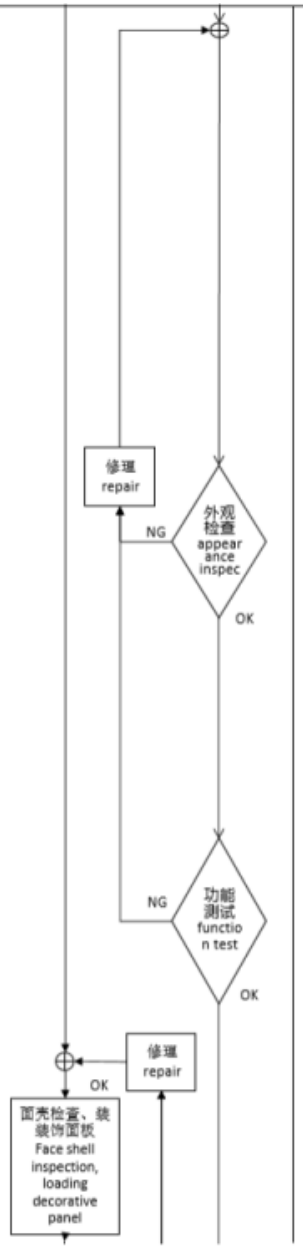

14	**PCBA**	波峰焊 Wave soldering	Temperature,		According to soldering inspection SOP to check below key points: 1.ESD control:positive and spring negtive point need to cling to PCBA, position could not be mixed and no rust, no deformed; 2.tin point need to be fine and smooth, full ears, brightness, fake soldering(lace tin),tin points connected is not allowed; tin should be above 270 degree sorrounded with component pins, tine pour into the other side should not less than 75%. 3.there is no dirt on metal dome, metal dome in proprate position.(no shift) ; 4.no soldering defect, the height of soldering point should be ≤1.5mm; 5.seperate the defect products.	≥20PCS/HR	目视、静电环 visual inspection, magnifier	ESD管控规范、锡点检验规范、SOP ESD control standard, tin point inspection standard	IPQC首件记录、巡检记录 IPQC first unit product record, inspection record	重工 rework	装配部 assembling department	作业员 operator	
15	PCBA外观检验 PCBA appearance inspection	PCBA			无错件、少件、反向，锡点无连锡、翘件、少锡、虚假焊、ESD no missing component, no omit, no reverse, no turnup,no less solder, no poor connect,ESD	≥20PCS/HR	目视、放大镜 visual inspection, magnifier	ESD管控规范、锡点检验规范、SOP ESD control standard, tin point inspection standard	IPQC首件记录、巡检记录、FQC全检报表 IPQC first unit product record, inspection record	重工 rework	装配部 assembling department	检验员 Inspector	
16	烧录 program	烧录 program			程序是否符合功能要求、ESD if the program apply to function requirement, ESD	首件检查 First unit check	电脑、烧录机、程序 computer, burner, program	ESD管控规范、IC烧录管理规范、SOP ESD control specification, IC burning management specification, SOP	IPQC首件记录、巡检记录 IPQC first unit product record, inspection record	重工 rework	装配部 assembling department	作业员 operator	核对值码 Check value code
17	PCBA功能检验 PCBA PCBA functional check	PCBA			单键功能正常、无死机、ESD,静态电流、动态电流 RF信号测试 To check if each key function is mormal,ESD, hang up, hang up; To check static current, work current RF signal test	≥20PCS/HR	解码仪、全自动检测仪、工程测试治具decoder,full-auto detector, Engineering test fixture	ESD管控规范、检验规范、码表、SOP ESD control spec, inspection spec, code library,sop	IPQC首件记录、巡检记录、FQC全检报表 IPQC first unit product record, inspection record,FQC completely inspection record	重工 rework	装配部 assembling department	检验员 Inspector	
18	成品组装 Finished product assembly	面壳、装饰面板 Face shell, decorative panel			面壳是否有披锋、丝印模糊、缺胶、刮花、污迹等不良；装饰面板有无丝印模糊、缺胶、脏污等不良； To check whether there are burr,printing vague, scratch, dirt and so on other defect status;To check if deco has printing vague, chipped.	≥20PCS/HR	目视 Visual inspection	成品检验规范、SOP Finished product inspection specification, SOP	IPQC首件记录、巡检记录 IPQC first record, inspection record	重工 rework	装配部	作业员 operator	注意面板是否组装到位

深圳市创荣发电子有限公司
SHENZHEN C&D ELECTRONICS CO., LTD.

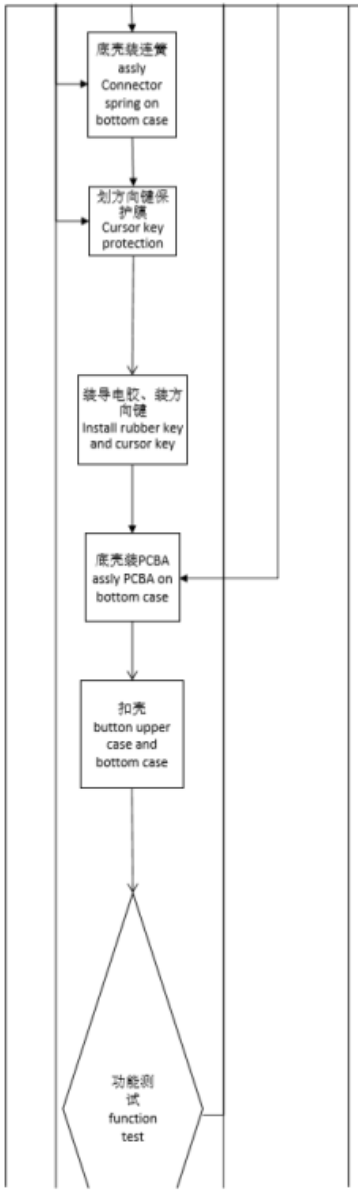

19	成品组装 Finished product assembly	连簧 Connector spring			底壳是否有刮花、缺胶、披锋、连簧不可浮高、偏位 Whether the bottom case is scratched, lacks plactic, burr, shift; connector could not higher than bottom case	≥20PCS/HR	目视 Visual inspection	成品检验规范、SOP Finished product inspection specification, SOP	IPQC首件记录、巡检记录 IPQC first record, inspection record	重工 rework	装配部 assembling department	作业员 operator	
20	成品组装 Finished product assembly	保护膜 Protective film			将保护膜划成单个、保护膜无异物、脏污 Cut the protective film,to make sure there are no dirt and impurities	≥20PCS/HR	目视 Visual inspection	成品检验规范、SOP Finished product inspection specification, SOP	IPQC首件记录、巡检记录、FQC全检报表 IPQC first record, inspection record, FQC inspection report	重工 rework	装配部 assembling department	作业员 operator	
21	成品组装 Finished product assembly	导电胶、方向键 rubber key, cursor key			导电胶与方向键有无缺胶、丝印模糊、色差、脏污不良 To check if rubber key and cursor key have chipped, printing vague, chromatism, dirt	≥20PCS/HR	目视 Visual inspection	成品检验规范、SOP Finished product inspection specification, SOP	IPQC首件记录、巡检记录 IPQC first record, inspection record	重工 rework	装配部 assembling department	作业员 operator	
22	成品组装 Finished product assembly	底壳、PCBA Bottom case, PCBA			PCBA是否装到位，发射管是否露出； To check whether the PCBA board is in place or not, and whether Leds are exposed;	≥20PCS/HR	目视 Visual inspection	成品检验规范、SOP Finished product inspection specification, SOP	IPQC首件记录、巡检记录 IPQC first record, inspection record	重工 rework	装配部 assembling department	作业员 operator	
23	成品组装 Finished product assembly	底壳、面壳 upper case and bottom case			是否有缝大、错位等不良 Whether there is such a problem as big gap or misplacement	≥20PCS/HR	目视 Visual inspection	检验规范、SOP Inspection specifications, SOP	IPQC首件记录、巡检记录、FQC全检报表 IPQC first record, inspection record, FQC inspection repor	重工 rework	装配部 assembling department	作业员 operator	
24	成品 Finished product	功能检验 Functional inspection			全功能测试（码值、频率、距离） To check all keys function(key code, distance, frequency)	≥20PCS/HR (IPQC)，全检 (FQC) ≥20PCS/HR (IPQC), Full Inspection (FQC)	全自动检测仪 Automatic detector, Push key by hand	成品检验规范、SOP Finished product inspection specification, SOP	IPQC首件记录、巡检记录、FQC全检报表 IPQC first record, inspection record, FQC inspection report	重工 rework	装配部 assembling department	FQC	
25	成品 Finished product	功能检验 Functional inspection			蓝牙语音测试 Bluetooth voice test	≥20PCS/HR (IPQC)，全检 (FQC) ≥20PCS/HR (IPQC), Full Inspection (FQC)	工程测试软件 Engineering test software	成品检验规范、SOP Finished product inspection specification, SOP	IPQC首件记录、巡检记录、FQC全检报表 IPQC first record, inspection record, FQC inspection report				

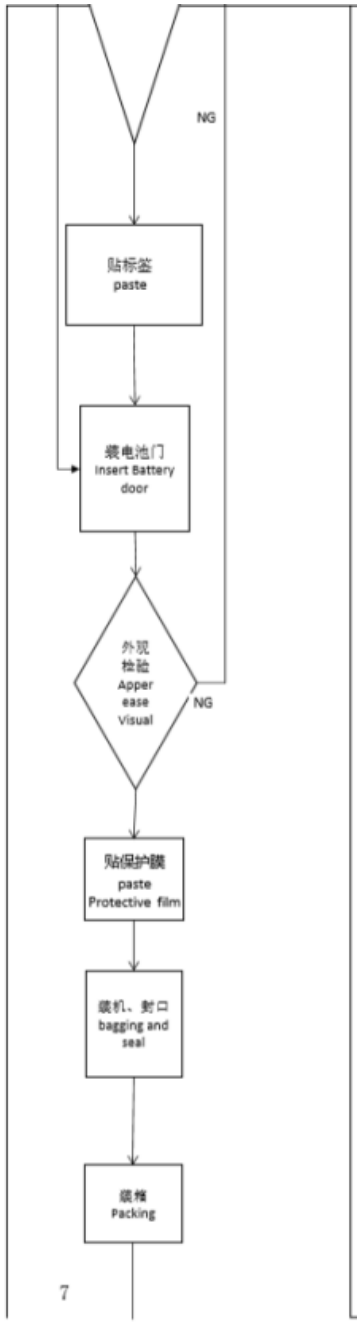

26	成品 Finished product	功能检验 Functional inspection			IR信号强度测试 IR signal strength test	≥20PCS/HR (IPQC)，全检 (FQC) ≥20PCS/HR (IPQC), Full Inspection (FQC)	IR测试仪 IR tester	成品检验规范、SOP Finished product inspection specification, SOP	IPQC首件记录、巡检记录、FQC全检报表 IPQC first record, inspection record, FQC inspection report	重工 rework	装配部 assembling department	FQC	
27	成品 Finished product	贴纸、电池门 Stickers, battery door *Lot No label *Service label			电池门有无披锋、缺胶、贴纸是否到位、有无漏贴 Whether the battery door has a front edge, lack of glue, whether the stickers are in place, and whether there are any leaks	≥20PCS/HR (IPQC)	目视 Visual inspection	成品检验规范、SOP Finished product inspection specification, SOP	IPQC首件记录、巡检记录、FQC全检报表 IPQC first record, inspection record, FQC inspection report	重工 rework	装配部 assembling department	作业员 operator	
28	成品 Finished product	电池门 battery door			电池门是否有披锋、缺胶、脏污等不良 Whether the battery door is broken, lack of glue, dirt, etc.	≥20PCS/HR (IPQC)	目视 Visual inspection	成品检验规范、SOP Finished product inspection specification, SOP	IPQC首件记录、巡检记录、FQC全检报表 IPQC first record, inspection record, FQC inspection report	重工 rework	装配部 assembling department	作业员 operator	
29	成品 Finished product	外观检验 Visual inspection			组装无错位、脏污、变形 外壳及导电胶无杂点、丝印不良、划伤等；间隙及异响 To check misplacement, dirt, deformation; To check if there are speckles\faints\scratchs on cases and rubber; there are no big gap between cases and no abnormal noise.	≥20PCS/HR (IPQC)，全检 (FQC) ≥20PCS/HR (IPQC), Full Inspection (FQC)	目视 Visual inspection	成品检验规范、SOP Finished product inspection specification, SOP	IPQC首件记录、巡检记录、FQC全检报表 IPQC first record, inspection record, FQC inspection report	重工 rework	装配部 assembling department	FQC	
30	包装 package	保护膜 Protective film			产品外观清洁、保护膜配齐 Product appearance is clean, protective film is neat	≥20PCS/HR (IPQC)	静电风枪 Electrostatic air gun	成品检验规范、SOP Finished product inspection specification, SOP	IPQC首件记录、巡检记录 IPQC first record, inspection record	重工 rework	装配部 assembling department	作业员 operator	
31	包装 package	PE袋、封口机 PE bag, sealing machine			PE袋无破损、袋子封口平整、热熔位置一致无开裂、PE袋条码位置无偏位 PE bag is not damaged, the bag sealing is smooth, the hot melt position is consistent without cracking, and the position of the PE bag barcode is not offset	≥20PCS/HR (IPQC)	静电风枪 Electrostatic air gun	成品检验规范、SOP Finished product inspection specification, SOP	IPQC首件记录、巡检记录 IPQC first record, inspection record	重工 rework	装配部 assembling department	作业员 operator	
32	包装 package	装箱 Packing			产品包装袋、条码、封口良好，不可以漏装数量 Product packaging bag, bar code, sealing is good, can not be short-input	≥20PCS/HR (IPQC)	目视 Visual inspection	成品检验规范、SOP Finished product inspection specification, SOP	IPQC首件记录、巡检记录、FQC全检报表 IPQC first record, inspection record, FQC inspection repor	重工 rework	装配部 assembling department	作业员 operator	

OQC		33	OQC	出货检查 OQC			•Appearance ·Packaging --- Carton, label, etc. ·RCU •Quantity •Performance ·Transmission power ·Standby/operation current ·Lower limit voltage etc. •Function etc.	抽样计划 Material Sampling Plan Major;AQL0.4 Minor:AQL1.0	目视、卡尺、污点卡、电流表、解码仪 Visual, caliper	工程样板、SIP、规格书 Injection Inspection Specification & Engineering Model, SOP, Specification	OQC检验报告		品质部	OQC	
Shipment		34	装柜 container stuffing	装柜检验 inspect before stuffing into container			货物与出货单是否一致、产品外箱包装标签脱落、外箱是否破损、货柜内部是否潮湿、产品不出现挤压。 To check if the goods are agree with (same as) delivery order, if laber on carton has fall off, if the carton has broken, if it is humidy inside container, if the cartons are squeezing each other.	每批 each lot	手电筒 flashlight	销货单 delivery order	销货单、出货记录 delivery order and shipping out record	重工 rework	仓库部	仓管员、OQC	
制订:董继远	审核:刘强			核准: 陈黎											

IC WARNING:

This device contains licence-exempt transmitter(s)/receiver(s) that comply with Innovation, Science and Economic Development Canada’s licence-exempt RSS(s). Operation is subject to the following two conditions:

(1) This device may not cause interference.

(2) This device must accept any interference, including interference that may cause undesired operation of the device.

Cet appareil contient des émetteurs / récepteurs exempts de licence conformes aux RSS (RSS) d’Innovation, Sciences et Développement économique Canada. Le fonctionnement est soumis aux deux conditions suivantes :

(1) Cet appareil ne doit pas causer d’interférences.

(2) Cet appareil doit accepter toutes les interférences, y compris celles susceptibles de provoquer un fonctionnement indésirable de l’appareil.

FCC COMPLIANCE STATEMENT:

This device complies with part 15 of the FCC Rules. Operation is subject to the following two conditions: (1) This device may not cause harmful interference, and (2) this device must accept any interference received, including interference that may cause undesired operation.

Changes or modifications not expressly approved by the party responsible for compliance could void the user’s authority to operate the equipment.

This equipment has been tested and found to comply with the limits for a Class B digital device, pursuant to Part 15 of the FCC rules. These limits are designed to provide reasonable protection against harmful interference in a residential installation. This equipment generates, uses and can radiate radio frequency energy and if not installed and used in accordance with the instructions, may cause harmful interference to radio communications. However, there is no guarantee that interference will not occur in a particular installation. If this equipment does cause harmful interference to radio or television reception, which can be determined by turning the equipment off and on, the user is encouraged to try correct the interference by one or more of the following measures:

- Reorient the receiving antenna.
- Increase the separation between the equipment and receiver.
- Connect the equipment into and outlet on a circuit different from that to which the receiver is connected.
- Consult the dealer or an experienced radio/TV technician for help.