TECHNOLOGY SOLUTIONS UK LTD

USER GUIDE:
2128P *BLUETOOTH*®
UHF RFID READER

www.tsl.com

Design • Development • Manufacture

TERMS & CONDITIONS

Copyright © 2019 Technology Solutions (UK) Ltd. All rights reserved.

No part of this publication may be reproduced or used in any form, or by any electrical or mechanical means, without permission in writing from Technology Solutions (UK) Ltd. This includes electronic or mechanical means,such as photocopying, recording, or information storage and retrieval systems. The material in this manual is subject to change without notice.

Technology Solutions (UK) Ltd (TSL®) reserves the right to make changes to any software or product to improve reliability, function, or design. TSL® does not assume any product liability arising out of, or in connection with, the application or use of any product, circuit, or application described herein. No license is granted, either expressly or by implication, estoppel, or otherwise under any patent right or patent, covering or relating to any combination, system, apparatus, machine, material, method, or process in which TSL® products might be used. An implied license exists only for equipment, circuits, and subsystems contained in TSL® products. TSL® and the TSL® logo are registered trademarks of TSL®. Other product names mentioned in this manual may be trademarks or registered trademarks of their respective companies and are hereby acknowledged.

All software is provided strictly on an “as is” basis. All software, including firmware, furnished to the user is on a licensed basis. TSL® grants to the user a non-transferable and non-exclusive license to use each software or firmware program delivered hereunder (licensed program). Except as noted below, such license may not be assigned, sublicensed, or otherwise transferred by the user without prior written consent of TSL®. No right to copy a licensed program in whole or in part is granted, except as permitted under copyright law. The user shall not modify, merge, or incorporate any form or portion of a licensed program with other program material, create a derivative work from a licensed program, or use a licensed program in a network without written permission from TSL®. The user agrees to maintain TSL’s copyright notice on the licensed programs delivered hereunder, and to include the same on any authorized copies it makes, in whole or in part. The user agrees not to decompile, disassemble, decode, or reverse engineer any licensed program delivered to the user or any portion thereof.

iPad, iPad Air, iPad mini, iPad Pro, iPhone, iPod, iPod touch are trademarks of Apple Inc., registered in the U.S. and other countries. IOS is a trademark or registered trademark of Cisco in the U.S. and other countries and is used under license.

Use of the Made for Apple badge means that an accessory has been designed to connect specifically to the Apple product(s) identified in the badge and has been certified by the developer to meet Apple performance standards. Apple is not responsible for the operation of this device or its compliance with safety and regulatory standards.

The *Bluetooth*® word mark and logos are registered trademarks owned by Bluetooth SIG, Inc. and any use of such marks by Technology Solutions (UK) Ltd is under license. Other trademarks and trade names are those of their respective owners.

CONTENT

Introduction....4
- Parts of the 2128P UHF Reader....4
- Alternative Configuration of the 2128P UHF Reader....5
- Technical Specifications....6

Using the 2128P UHF RFID Reader....8
- Battery Removal/Installation....8
- Attaching Devices via the ePop-Loq® Mount....14
- Charging....15
- Button Operation....16
- Reading Transponders....17
- Status LEDs....18

Connections....22
- USB Connection....22
- *Bluetooth*® Wireless Technology Connection....24
- Comparison of *Bluetooth*® Operating Modes....25
- Changing the *Bluetooth*® Operating Mode....26
- Setting up a *Bluetooth*® Connection with a Supported Apple iOS Device....28

Micro SD Card....33
- Installation and Removal....33
- Auto Run File (AUTO.TXT)....33
- Log File (LOG.TXT)....34

Software Development....35

Troubleshooting and Maintenance....36
- Maintenance....36
- Troubleshooting....36

Regulatory Information....37
- Information to the user – FCC....37
- Marking and European Economic Area (EEA)....37
- Canadian Warning Statements....38
- Korea Warning Statement for Class B ITE....38
- Laser Warning....39

Health and Safety Recommendations....40

Waste Electrical and Electronic Equipment (WEEE)....41

Warranty....41

About TSL®....43
- About....43
- Contact....43

Copyright © 2019 Technology Solutions (UK) Ltd

INTRODUCTION

The TSL® 2128P *Bluetooth*® UHF RFID Reader provides Ultra High Frequency (UHF) Radio Frequency Identification (RFID), with optional barcode scanning functionality. The unit can be used in batch mode using an optional Micro SD card, or can be connected via USB through the ePop-Loq® socket, or connected to a host device via *Bluetooth*®. The 2128P can read and write to EPC Global Class 1 Gen 2 UHF RFID transponders.

PARTS OF THE 2128P UHF READER

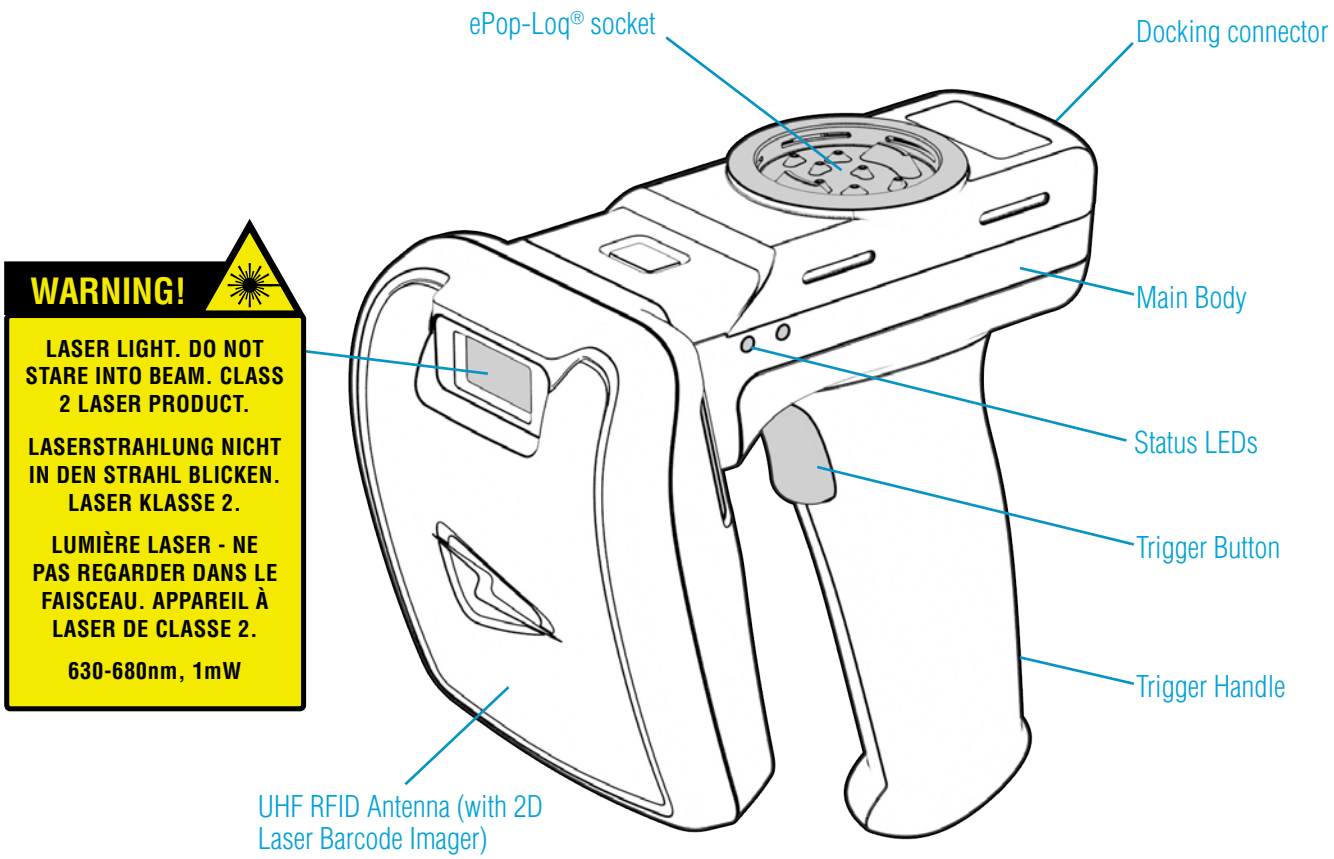

Figure 1: 2128P Reader with UHF RFID Antenna, 2D Laser Barcode Imager and Trigger Handle

Copyright © 2019 Technology Solutions (UK) Ltd

ALTERNATIVE CONFIGURATION OF THE 2128P UHF READER

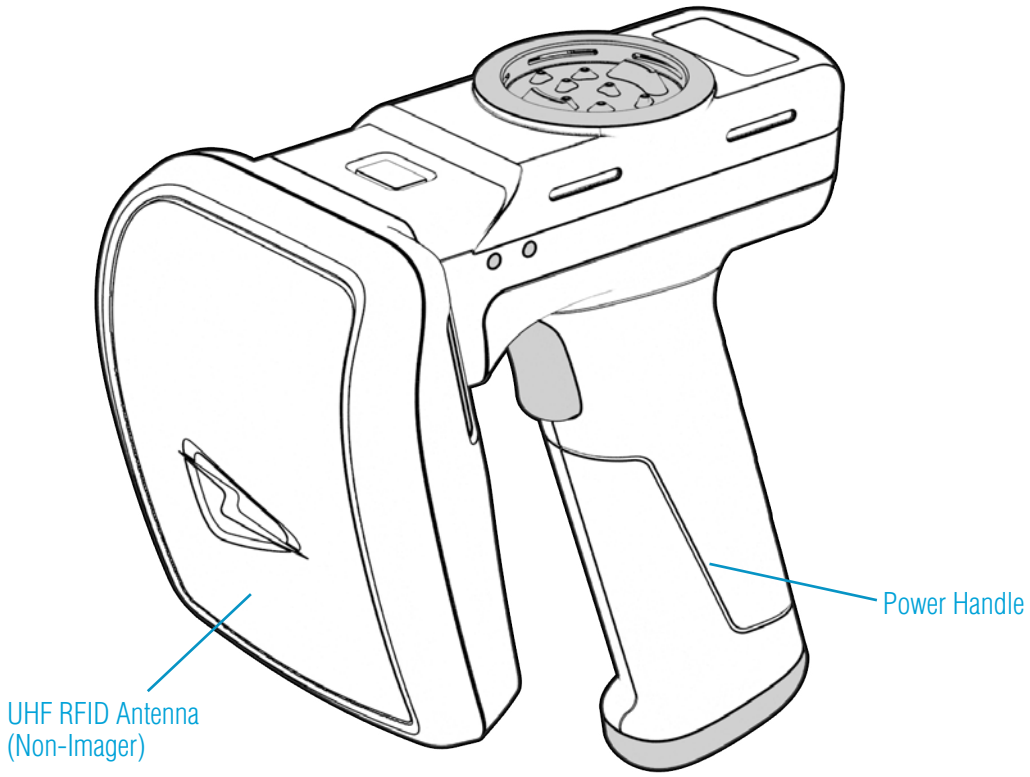

Figure 2: 2128P Reader with UHF RFID Antenna (Non-Imager) and Power Handle

TECHNICAL SPECIFICATIONS

Physical and Environmental Characteristics

Dimensions:	158 x 98 x 170 mm (LxWxH):
Weight:	445 g (including Trigger Handle & battery) 507 g (including Power Handle & battery)
User input:	Trigger button
User feedback:	Speaker, vibration motor, LED
Power:	Removable, rechargeable 3.7 volt 2300 mAh Lithium Polymer pack, 8.6 Watt hrs
Power Handle (optional):	6700 mAh Lithium Polymer pack, 27 Watt hrs
Input Rating:	5.2VDC, 4.0A
Enclosure materials:	Polycarbonate

Performance Characteristics

RFID engine:	TSL® custom module with embedded Impinj R2000.
Communication protocols:	TSL® ASCII 2.0 parameterised command set and Impinj binary protocol.
Memory:	Optional Micro SD card (maximum 32GB capacity supported). Up to 500 million date and time stamped EPCs can be stored on a 32GB Micro SD card (separate purchase from alternative supplier).
Compatible Host devices (*Bluetooth*®):	Any *Bluetooth*® Host[1] supporting the Serial Port Profile (SPP) or Human Interface Device (HID) profile (Android, iOS, Linux, Mac, Windows). See *Bluetooth*® Mode Comparison.
Compatible Host devices (USB):	Any USB host with FTDI VCP driver support (Windows, Linux, Mac, Android).

Environmental

Operating Temp.:	-10°C to 50°C (14°F to 122°F).
Charging Temp.:	Standard Trigger Handle (with Varta XL battery): 5°C to 40°C (41°F to 104°F). Power Handle: 0°C to 45°C (32°F to 113°F).
Storage Temp.:	Less than 1 month at -20°C to +45°C (-4°F to 113°F). Less than 6 months at -20°C to +35°C (-4°F to 95°F).
Humidity:	5% to 85% non-condensing.
Drop Spec:	Multiple drops to concrete: 4 ft./1.2 m ambient, 3ft / 0.9m across the operating temperature range.
Tumble:	500 0.5 metre tumbles at room temperature (1,000 cycles).
Electrostatic Discharge (ESD):	± 15kVdc air discharge; ± 8kVdc contact discharge.
MIL-STD 810F:	Meets and exceeds applicable MIL-STD 810F for drop, tumble and sealing.

RFID Performance

Standards supported:	EPC Class 1 Gen 2.
Nominal read range[2]:	Up to 8.5 m (27 ft).
Nominal write range[2]:	Up to 4 m (13 ft).
Field:	150-degree forward facing.
Antenna:	Right Hand Circularly Polarized with optional 2D scanner.
Frequency Range:	EU: 865-868 MHz; US: 902-928 MHz.
Maximum Output Power:	34 dBm EIRP[3]

Barcode Scanning

Imager:	Motorola SE4750SR 2D imager.
Sensor Resolution:	1280 x 960 pixels
Field of View:	Horizontal: 48°, Vertical: 36.7°
Focal Distance:	From front of engine: 7.38 in (187.5 mm)
Aiming LED (VLD):	655 nm Laser.
Illumination:	2X Warm white LEDs
Symbologies Supported:	1D: All major codes 2D: PDF417, MicroPDF417, Composite, RSS, TLC-39, Datamatrix, QR code, Micro QR code, Aztec, MaxiCode Postal Codes: US PostNet, US Planet, UK Postal, Australian Postal, Japan Postal, Dutch Postal (KIX).
Ranges[4]:	

Barcode	Near	Far
3 mil Code 39	7.1 cm	15.8 cm
6.67 mil PDF417	5.6 cm	26.9 cm
10 mil DataMatix	6.1 cm	26.9 cm
15 mil Code 128	6.1 cm	64.0 cm
20 mil Code 39	4.1 cm	92.2 cm

Communication

Bluetooth®:	*Bluetooth*® Version 4.1.
Bluetooth® Profiles:	SPP Profile, HID Profile, Apple iAP2, *Bluetooth*® Low Energy.
Bluetooth® Power:	TX Power +12dBm.
Bluetooth® Range:	Up to 100m.
Bluetooth® Pairing:	Simple Secure Pairing, NFC OOB Pairing
Direct USB	USB connection to handheld terminal via ePop-Loq® cases (separate purchase)

Peripherals and Accessories

External interface:	Custom connector - requires 2128 Docking Station for battery charging, and USB connectivity.
USB operating modes:	Tethered for real time data capture in conjunction with SmartWedge software. Download of stored scan data.
Desktop charger:	TSL® 2128 Docking Station (separate purchase).
Power Handle	Alternative trigger handle gives approximately 3X the original battery capacity.

[1] Compatible *Bluetooth*® stack required in the Host device
[2] Tag Read/Write performance is dependent on tag type, items tagged, number of tags in the field and other radio and environmental factors
[3] 34 dBm EIRP or maximum for regulatory region
[4] Artificial lighting can affect scanning performance

(These technical specifications are taken from the 2128P Preliminary Datasheet v0.06 - 5th August 2019)

TECHNICAL SPECIFICATIONS (CONTINUED)

Other Accessories:	New ePop-Loq® cases can be ordered by special request (volume dependent, lead times apply).

Regulatory

EMI/EMC FCC:	47 CFR Part 15B 15.107, 15.109 ICES-003 Issue 6 EN 55032:2015 +AC:2016, EN 55024:2010 +A1:2015, EN 301 489-1 V2.1.1
Electrical Safety:	IEC 62368-1:2014 CB EN 62368-1:2014 +AC:2015
RF Exposure:	47 CFR Part 2.1091, OET Bulletin 65 RSS-102 EN 50566:2017
RFID/Bluetooth:	47 CFR Part 15C 15.247 RSS-247 EN 300 328 V2.1.1, EN 302 208 V3.1.1, EN 301 489-17 V3.1.1, EN 301 489-3 V2.1.1

Part Numbers

2128P-ES1 (ETSI) 2128P-AS1 (FCC)	2128P *Bluetooth*® UHF Reader with 2D Imager, High Gain UHF Antenna, Trigger Handle, Battery
2128P-EX1 (ETSI) 2128P-AX1 (FCC)	2128P *Bluetooth*® RFID Reader with High Gain UHF Antenna (No Imager), Trigger Handle, Battery
2128-CRD	Docking Station, Power Supply and Mini USB cable

(These technical specifications are taken from the 2128P Preliminary Datasheet v0.06 - 5th August 2019)

BATTERY REMOVAL/INSTALLATION

STANDARD TRIGGER HANDLE

The battery is charged using a docking station and therefore is unlikely to need to be changed once installed. To access the battery compartment the grip handle must first be removed.

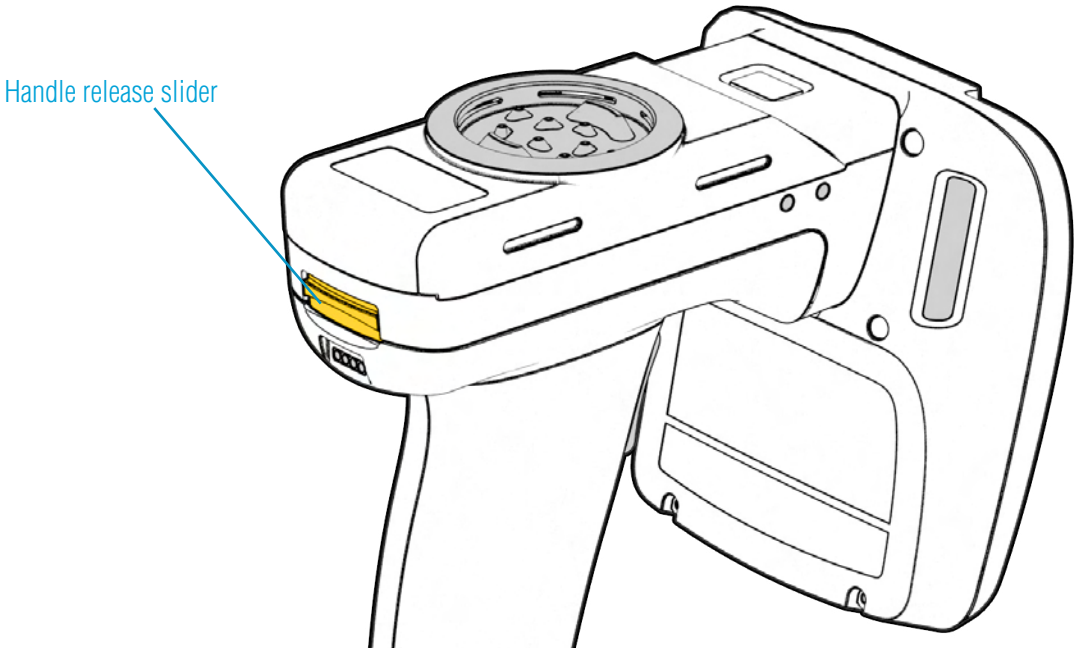

Figure 3: Remove handle

The battery compartment has a release latch. The direction to push is shown in the diagram below.

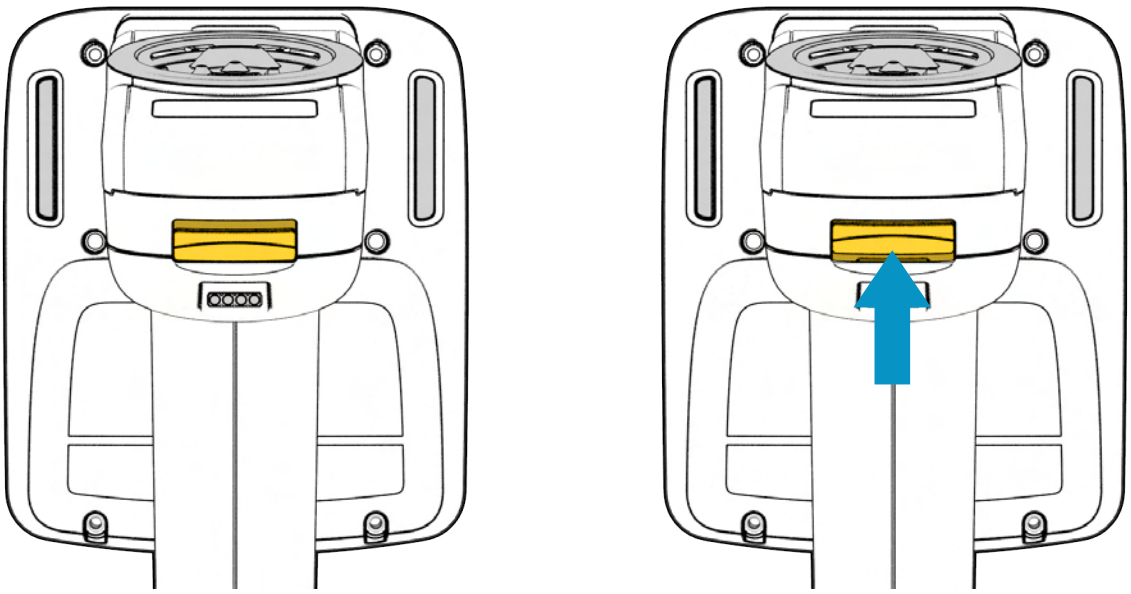

Figure 4: Handle release latch operation

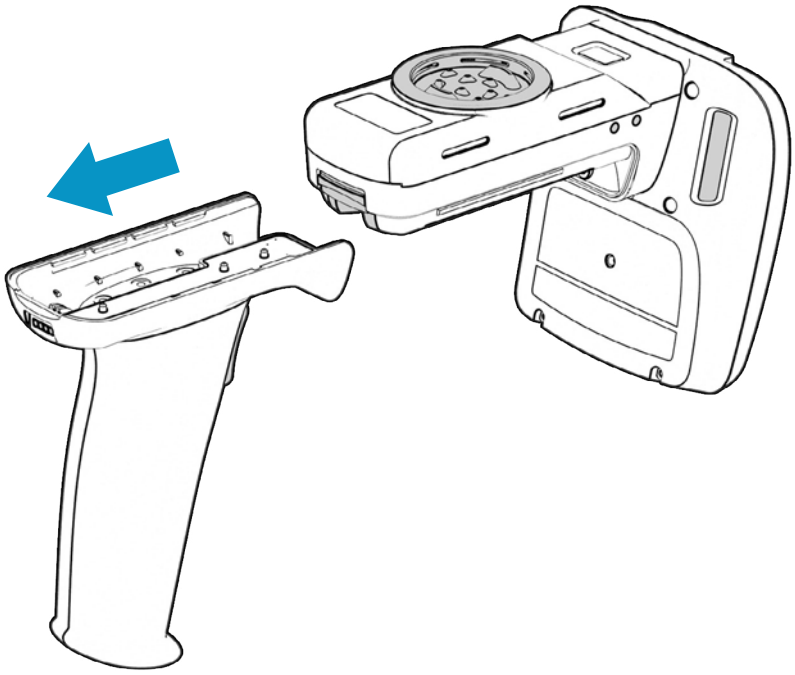

Figure 5: Slide handle off

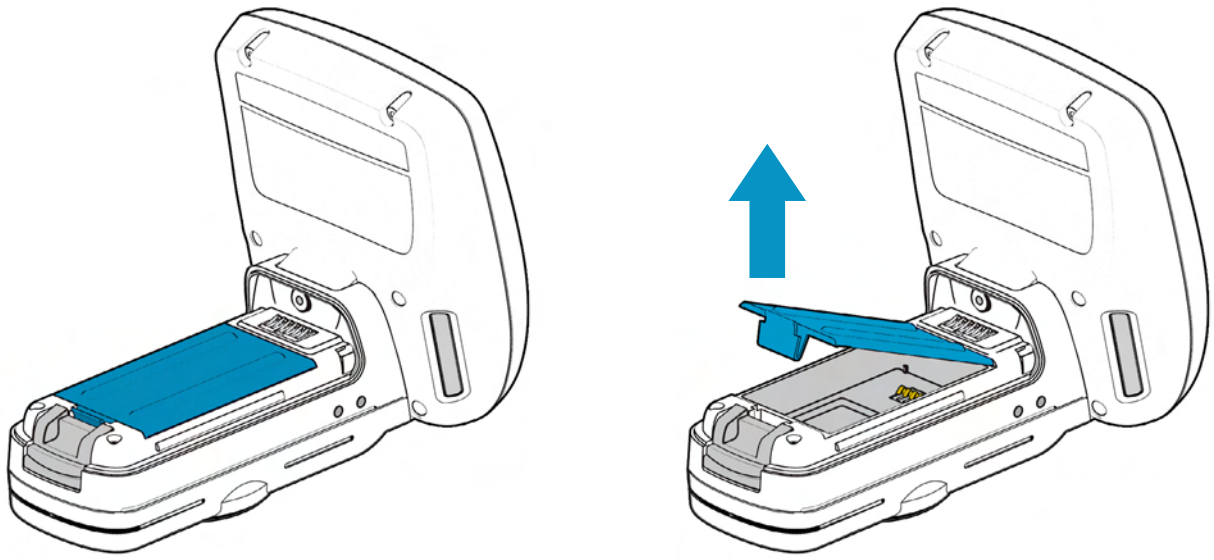

Figure 6: Remove battery cover

Copyright © 2019 Technology Solutions (UK) Ltd

The battery contacts need to be face down at the top of the battery to meet the contacts shown in the image below.

CAUTION!

RISK OF EXPLOSION IF BATTERY IS REPLACED BY AN INCORRECT TYPE.

DISPOSE OF USED BATTERIES ACCORDING TO THE INSTRUCTIONS.

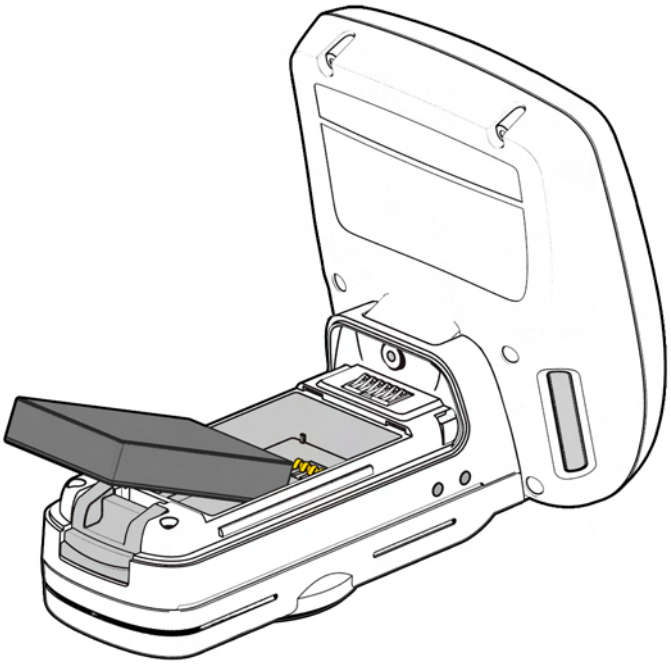

Figure 7: Battery placement

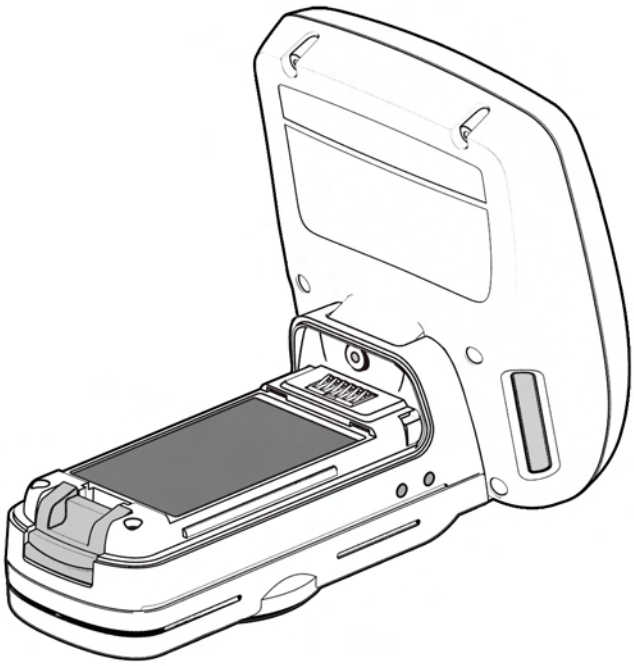

Figure 8: Battery in position

Once the battery is installed the actions to replace the cover are:

- Align the battery cover using the indents in the cover to the pips on the case
- Push the battery cover down into position
- Slide the grip handle back onto the main unit
- The release latches will audibly ‘click’ to indicate the grip handle is securely in place

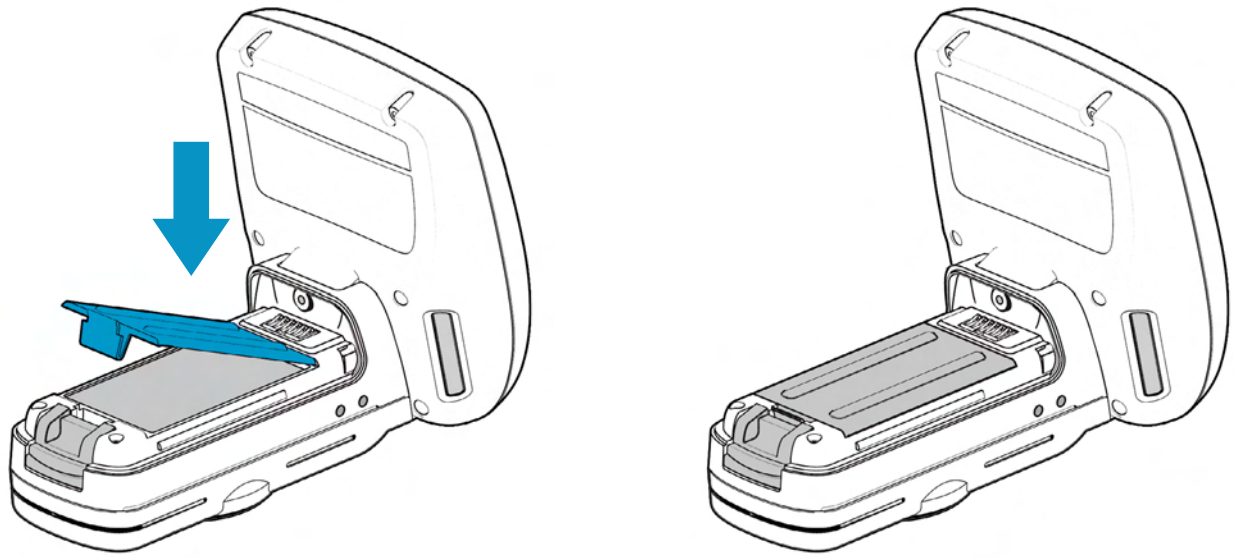

Figure 9: Replace battery cover

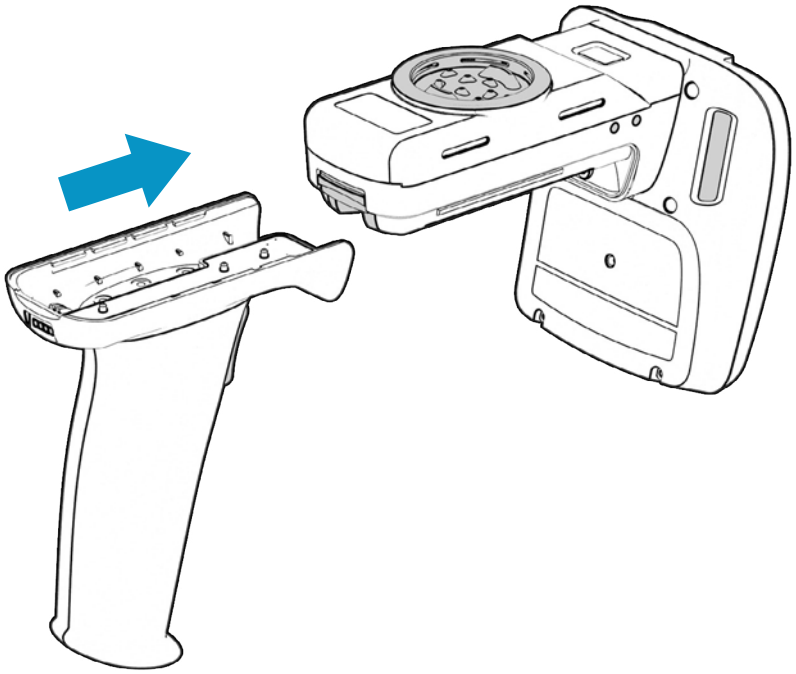

Figure 10: Slide handle into position

Copyright © 2019 Technology Solutions (UK) Ltd

POWER HANDLE

The power handle provides nearly three times the capacity of the regular 2128P battery. The power handle battery cells are fitted permanently inside the Power Handle grip and are not user-replaceable. A 'dummy battery' (included) must be fitted in place of the regular 2128P battery, in order to pass the battery contacts through to the Power Handle.

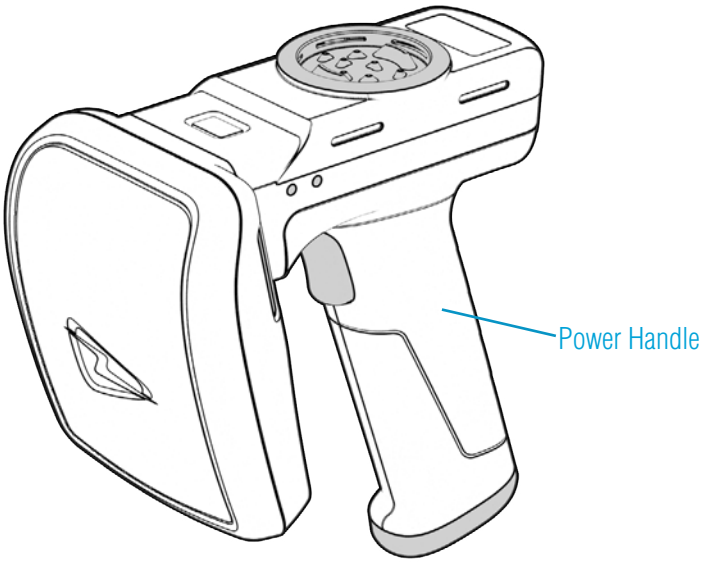

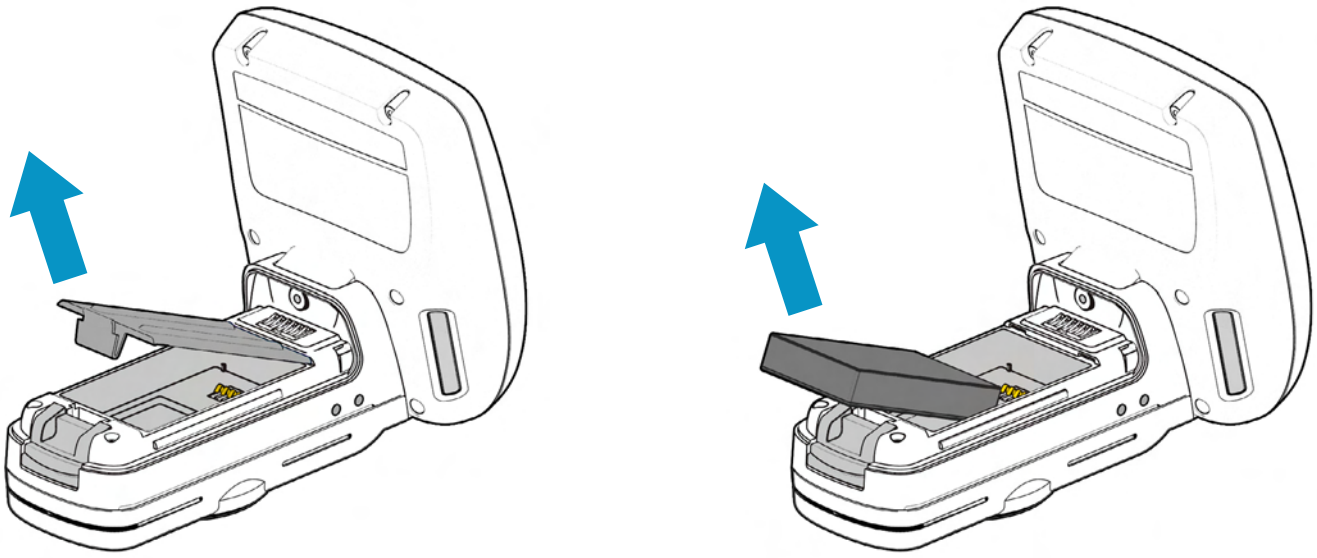

Figure 11: Remove Battery Cover and Battery (if present)

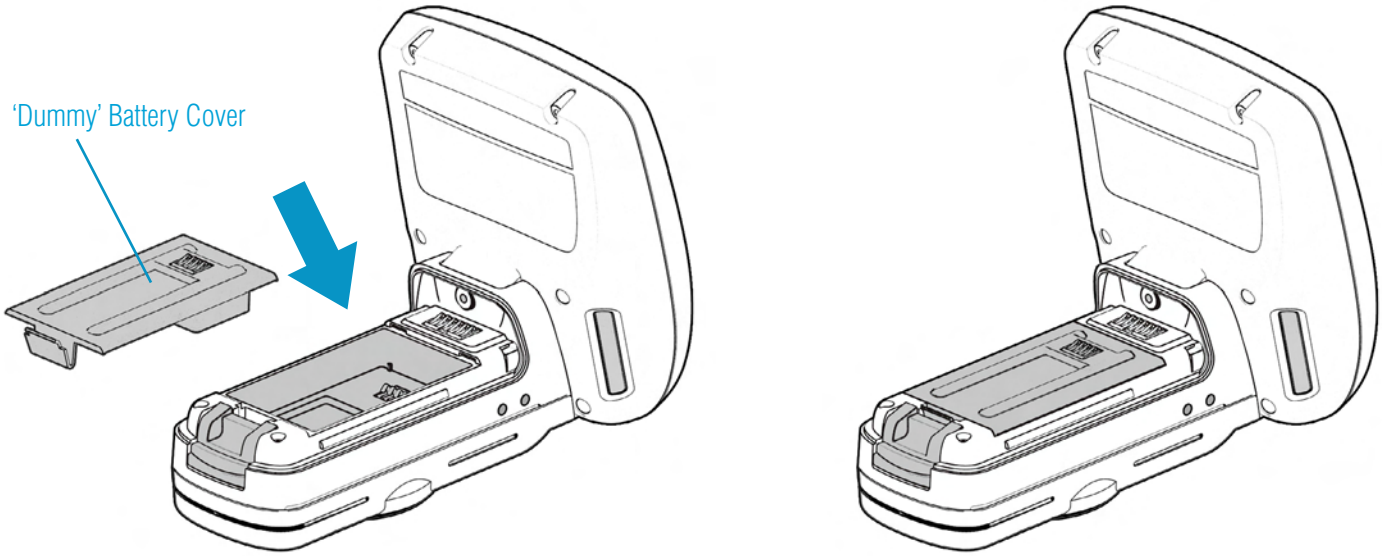

Figure 12: Insert 'Dummy' Battery Cover

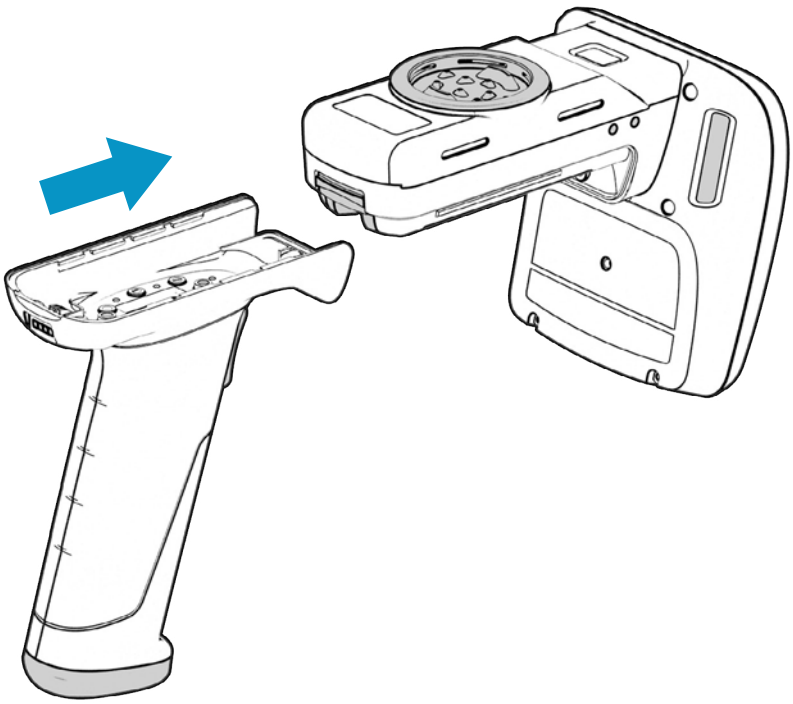

Figure 13: Slide Power Handle on

ATTACHING DEVICES VIA THE EPOP-LOQ® MOUNT

Custom ePop-Loq® cases from TSL® allow smartphones and mobile terminals to be physically attached to the 2128P *Bluetooth*® UHF RFID Reader and share direct electrical connections between the two devices.

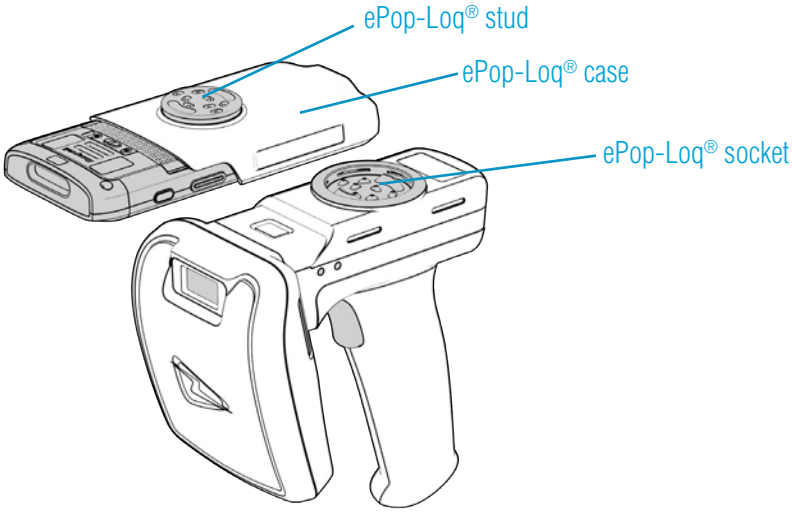

Figure 14: ePop-Loq® component parts

TO FIT A DEVICE WITH AN EPOP-LOQ® CASE TO A TSL® READER:

1. Ensure the phone / mobile terminal is fitted into its ePop-Loq® case *before* attaching the case to the 2128P UHF RFID Reader. This prevents over-flexing of the case.
2. Make sure all of the contacts - on both the ePop-Loq® socket and stud - are clean and free from dirt or debris.
3. Align the ePop-Loq® stud with the ePop-Loq® socket - ensuring that the front of the host device is pointing towards the antenna - and press the two parts together until they click into place.
4. To remove the ePop-Loq® case, pull in the opposite direction. Do not twist the devices when separating.

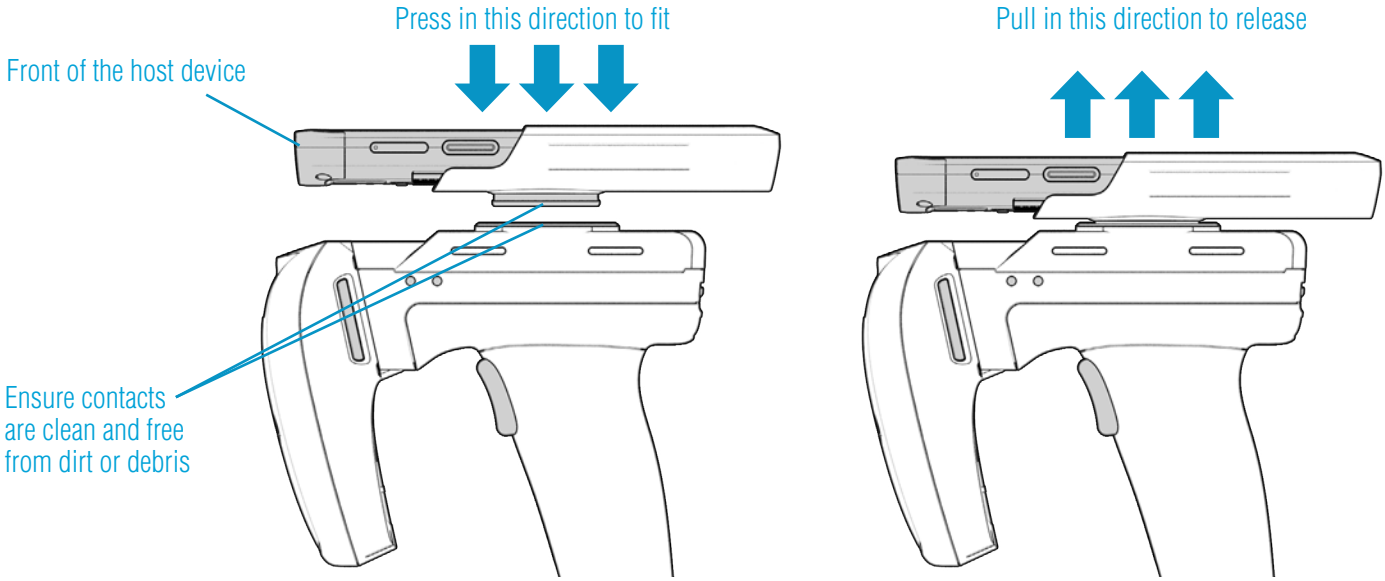

Figure 15: Attaching/Detaching an ePop-Loq® case

CHARGING

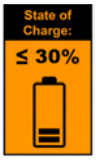

To comply with international shipping regulations, **all batteries included with TSL® products are discharged to less than 30% of their maximum capacity when shipped**. It is therefore important that the unit is fully charged before using your 2128P UHF Reader for the first time.

The 2128P UHF Reader can be charged using the dedicated 2128 Docking Station. The Docking Station has an input for power and a Mini USB connector for data communications.

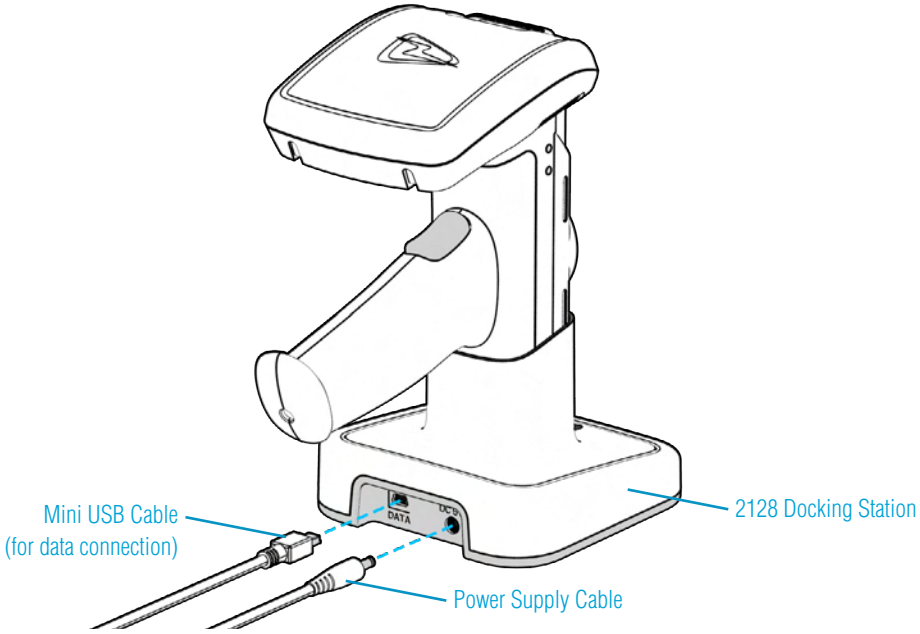

Figure 16: Charging the 2128P UHF Reader

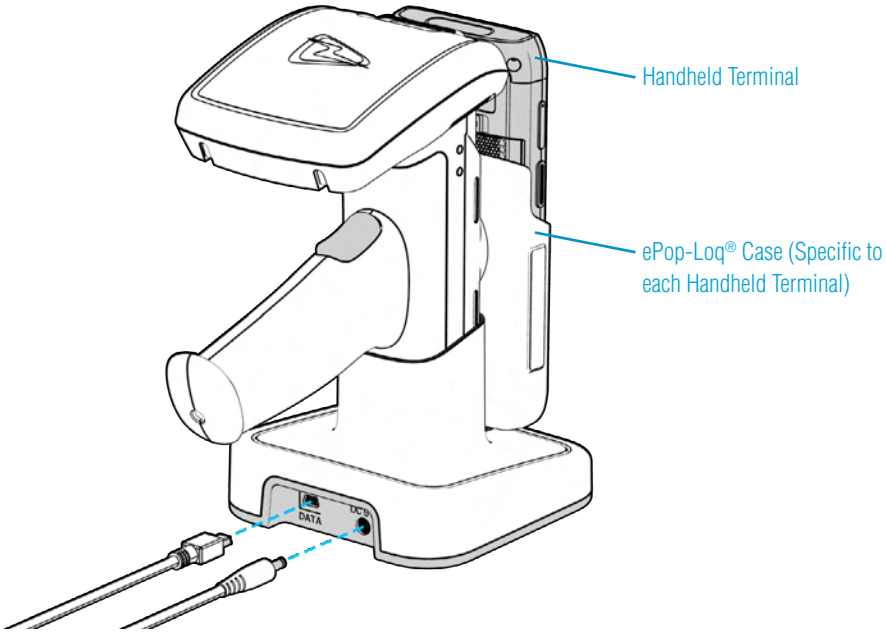

Figure 17: Charging the 2128P UHF Reader and Handheld Terminal

BUTTON OPERATION

The 2128P UHF Reader has a Primary button action and a Secondary button action which can be initiated by different button clicks: By default, the Primary action scans for UHF transponders, whilst the Secondary action initiates the laser barcode scanner (Barcode scanning is only available with the 2D Imager Antenna variant). Which operation is performed depends on the way in which the button is pressed. The Single and Double press button options are also programmable.

PRIMARY BUTTON CLICK AND HOLD

- UHF Transponder Read

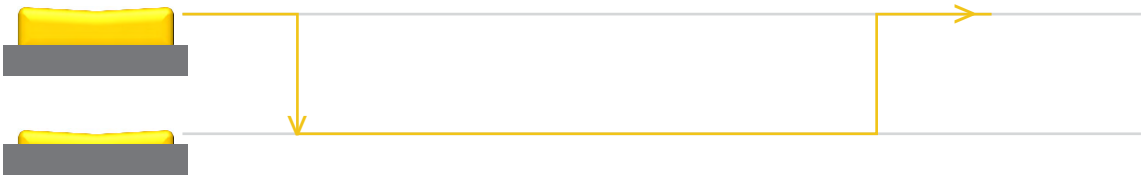

The primary button click is a standard button action:

- To initiate a primary button click press and hold the trigger button.
- To terminate a primary button click release the trigger button.

In the default configuration the 2128P UHF Reader scans for UHF transponders as the primary function. The 2128P UHF Reader will continue to scan for UHF transponders while the button is pressed. It will stop scanning once the button is released (and the current operation completes).

SECONDARY BUTTON DOUBLE CLICK AND HOLD

– Barcode Scan (2D Imager Antenna only)

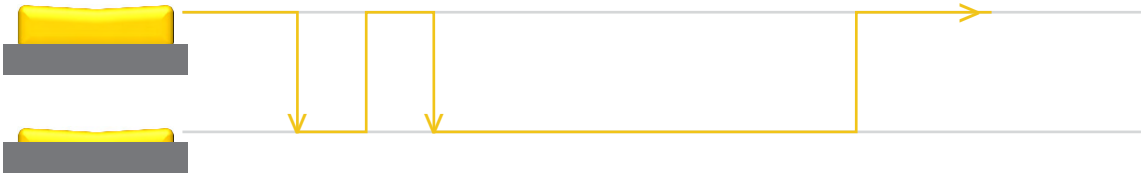

The secondary button click is a single click quickly followed by a second press (press-release-press).

- To initiate a secondary button click press then release then press and hold the trigger button.
- To terminate a secondary button click release the trigger button.

In the default configuration the 2128P UHF Reader scans for barcodes as the secondary function. The 2128P UHF Reader will continue to scan for a barcode while the button is pressed. It will stop scanning when any of the following conditions are met:

- A barcode is scanned.
- The button is released.
- The barcode engine times out.

Copyright © 2019 Technology Solutions (UK) Ltd

READING TRANSPONDERS

The 2128P UHF Reader can read and write to UHF RFID transponders when they are in range of the antenna. The antenna is located on the front of the 2128P UHF Reader and the read zone is in front of the antenna.
The range at which a transponder can be read depends on the transponder type and size, and the number of transponders in the field.

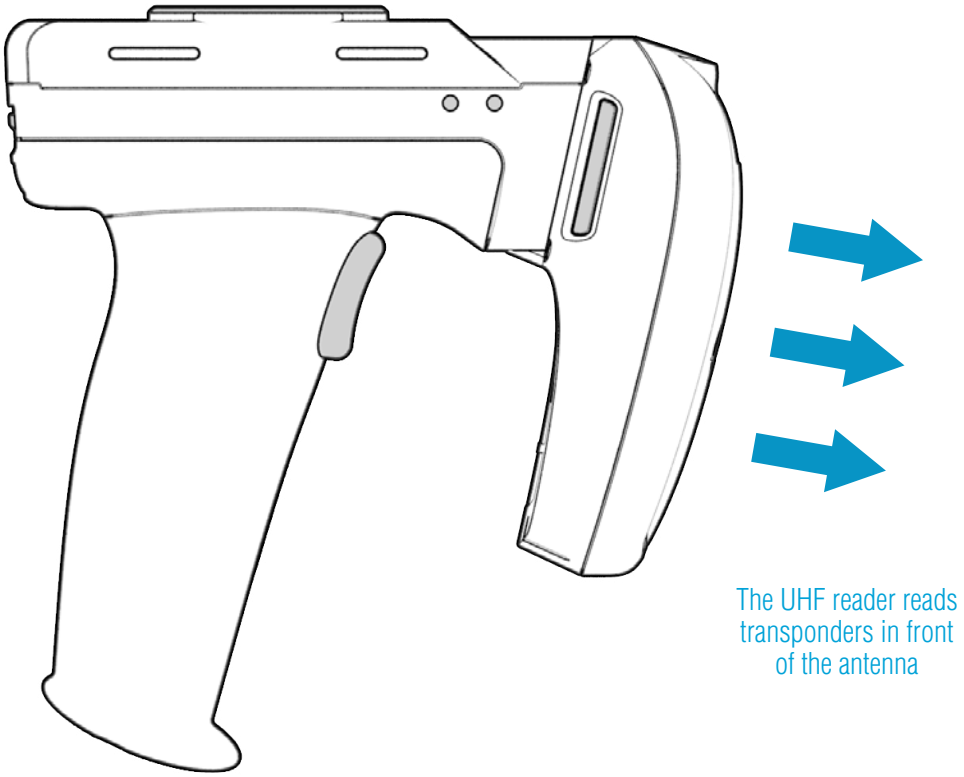

Figure 18: Antenna location and read direction

STATUS LEDS

Location of Main Body Status Indicators

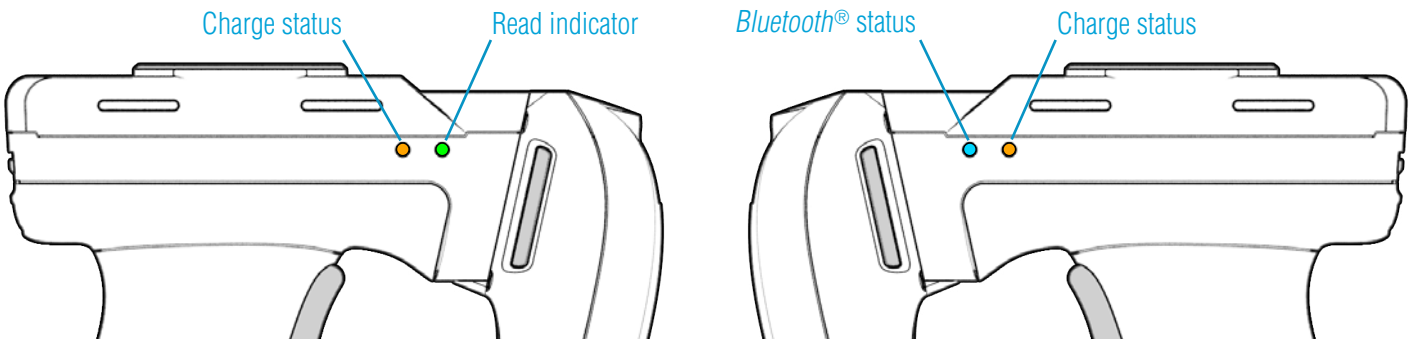

Figure 19: Location of status LEDs on the 2128P main body

Default Behaviour of the Main Body Status LEDs

LED Behaviour	Status
Blue slow flash (50% on, 50% off).	The reader is awake but there is no connection.
Blue constant.	The reader is awake and connected to a host.
Short green flash.	The reader has successfully read a tag or barcode or executed the alert command.
Green slow flash (50% on, 50% off).	Antenna error.
Orange slow flash (50% on, 50% off).	Battery low warning (<10% capacity remaining)- recharge immediately.
Orange short single slow flash.	Battery charging with battery level less than 33%.
Orange short double flash.	Battery charging with battery level less than or equal to 66%.
Orange short triple flash.	Battery charging with battery level greater than 66%.
Orange rapid flash.	There is a charge error / battery fault.
Orange constant.	The reader is fully charged.
All off.	The reader is off and not charging.

Copyright © 2019 Technology Solutions (UK) Ltd

Location of Antenna Indicators

The Antenna Indicators provide additional information to the user whilst the 2128P Reader is being operated.

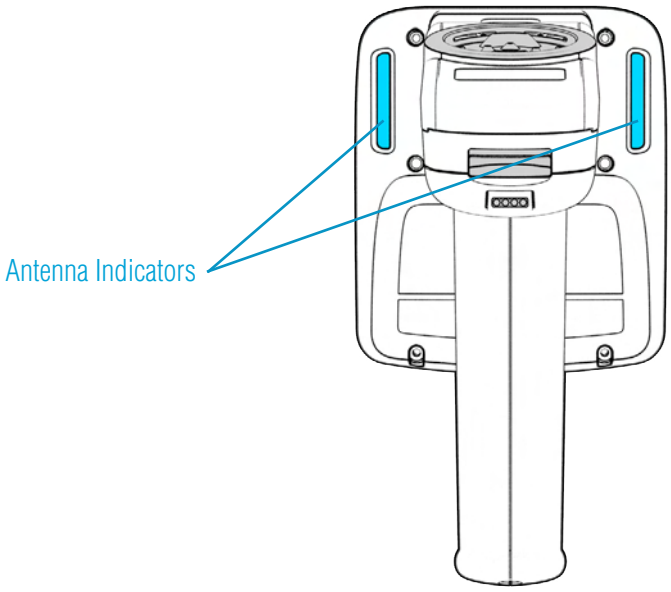

Figure 20: Location of Antenna Indicators

Default Behaviour of the Antenna Indicators

Reader has woken

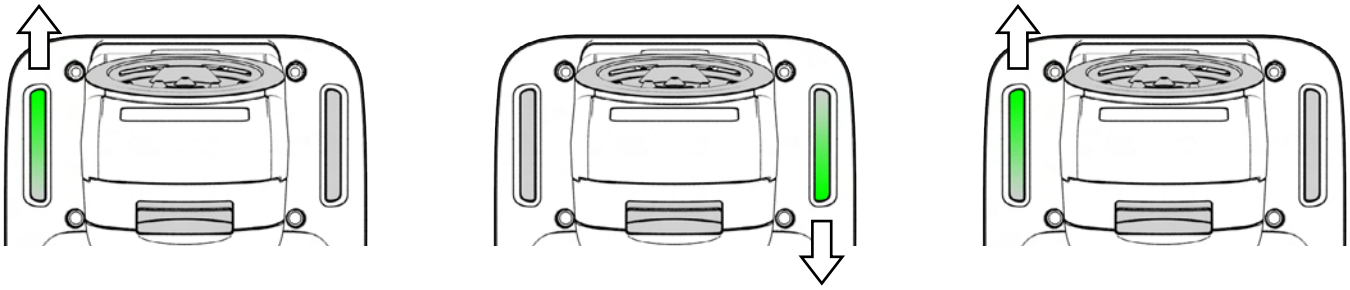

Indicators light up green one by one in a clockwise direction.

Reader is powering off

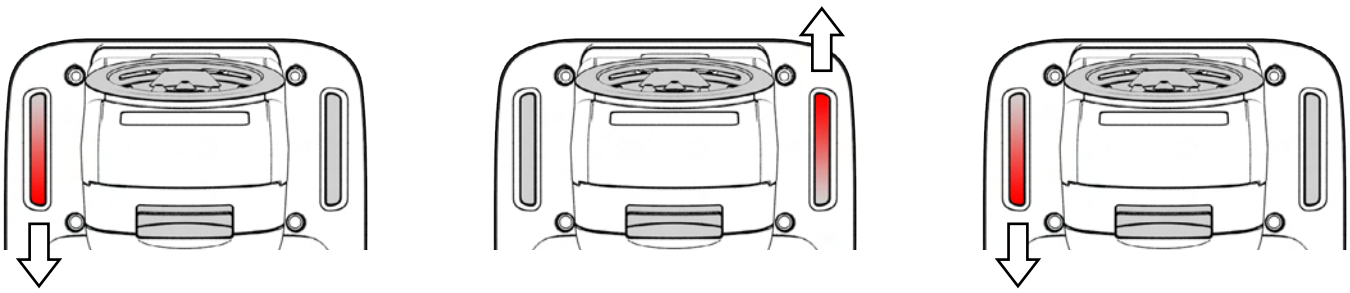

Indicators light up red one by one in an anti-clockwise direction.

Copyright © 2019 Technology Solutions (UK) Ltd

Bluetooth® Connected

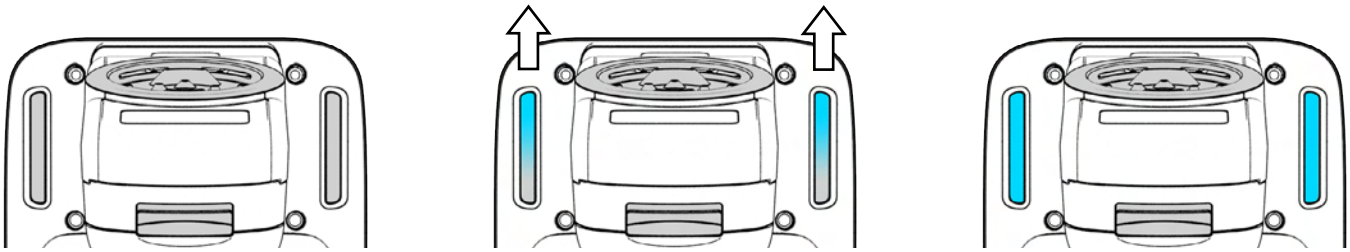

Indicators light up blue from bottom to top, pausing at the top.

Bluetooth® Disconnected

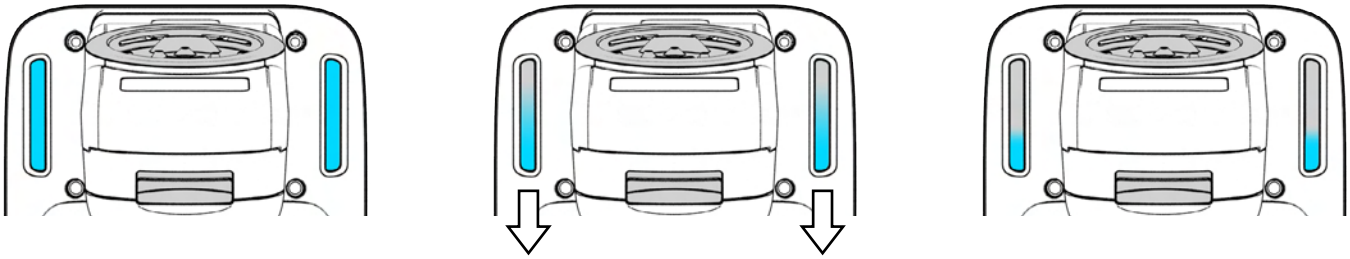

Indicators light up blue from top to bottom, pausing at the bottom.

RFID Information Received - New Tags Found

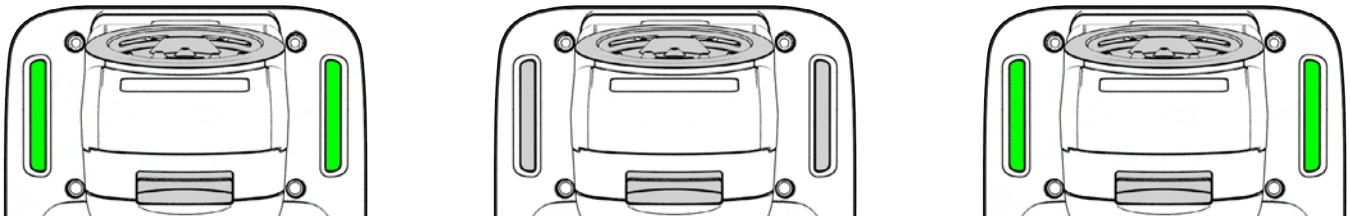

Indicators flash green.

RFID Information Received - No New Tags Found

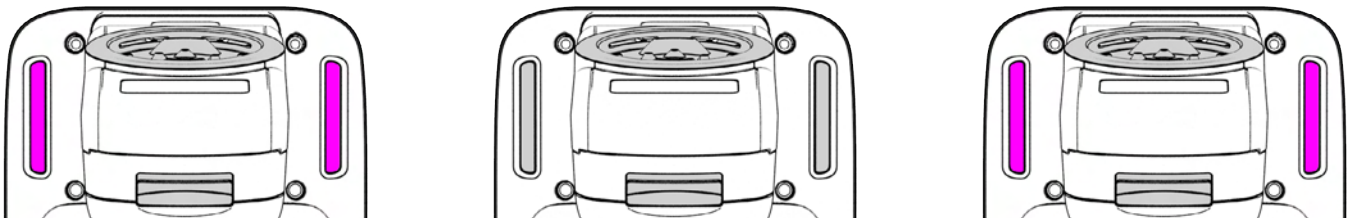

Indicators flash magenta.

Copyright © 2019 Technology Solutions (UK) Ltd

Barcode Information Received

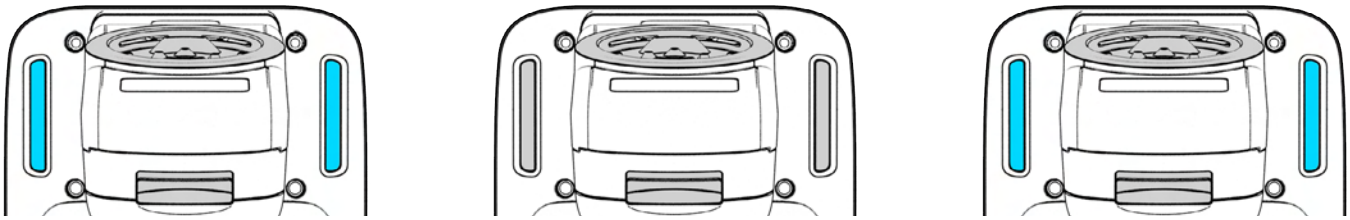

Indicators flash cyan.

'Find Me' Alert (requires compatible app)

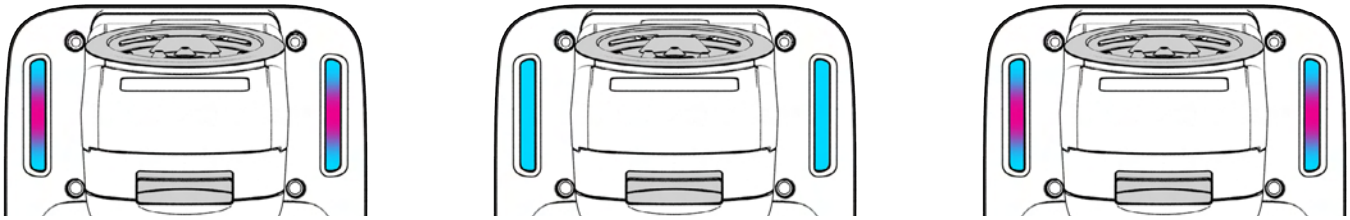

Indicators flash magenta and cyan. This alert is available in the latest SDK and can be implemented to help the user locate the (*Bluetooth*®-connected) 2128P Reader.

'Find a Tag' Function (requires compatible app)

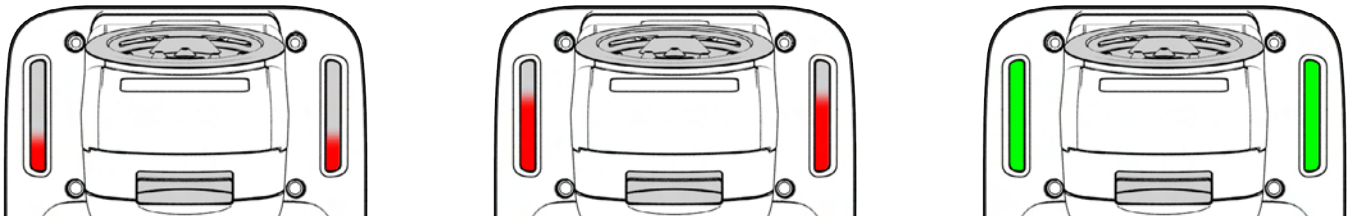

near nearer very near

This feature is available in the latest SDK and can be implemented to help the user locate a specific RFID tag.

Charge Complete (when powered-down and in cradle)

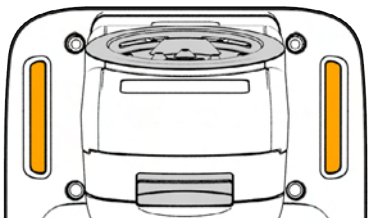

Both indicators orange.

Copyright © 2019 Technology Solutions (UK) Ltd

CONNECTIONS

The connection to the 2128P is either via *Bluetooth*® or USB. *Bluetooth*® connections use either a Virtual Com Port (VCP) or via the iAP protocol for supported Apple iOS Devices. Over USB only VCP is available. For VCP the connection is established at 115200 baud, 8 data bits, no parity, 1 stop bit and RTS/CTS (hardware) flow control.

USB CONNECTION

THE EPOP-LOQ® USB INTERFACE

The 2128P UHF RFID Reader has an ePop-Loq® mount which allows compatible devices with custom applications to communicate with the reader via USB instead of *Bluetooth*®.

- USB connection will be passed through ePop-Loq® to the attached device (via a custom ePop-Loq® case).
- The factory default mode for the 2128P ePop-Loq® USB connection is charge-only.
- USB data connection to the 2128P requires a custom application that supports the TSL® ASCII protocol over USB.
- If the 2128P UHF RFID READER is placed into the charge cradle whilst a device is attached to the ePop-Loq®, the USB data connection will be disconnected, and both the 2128P and the attached device will charge.

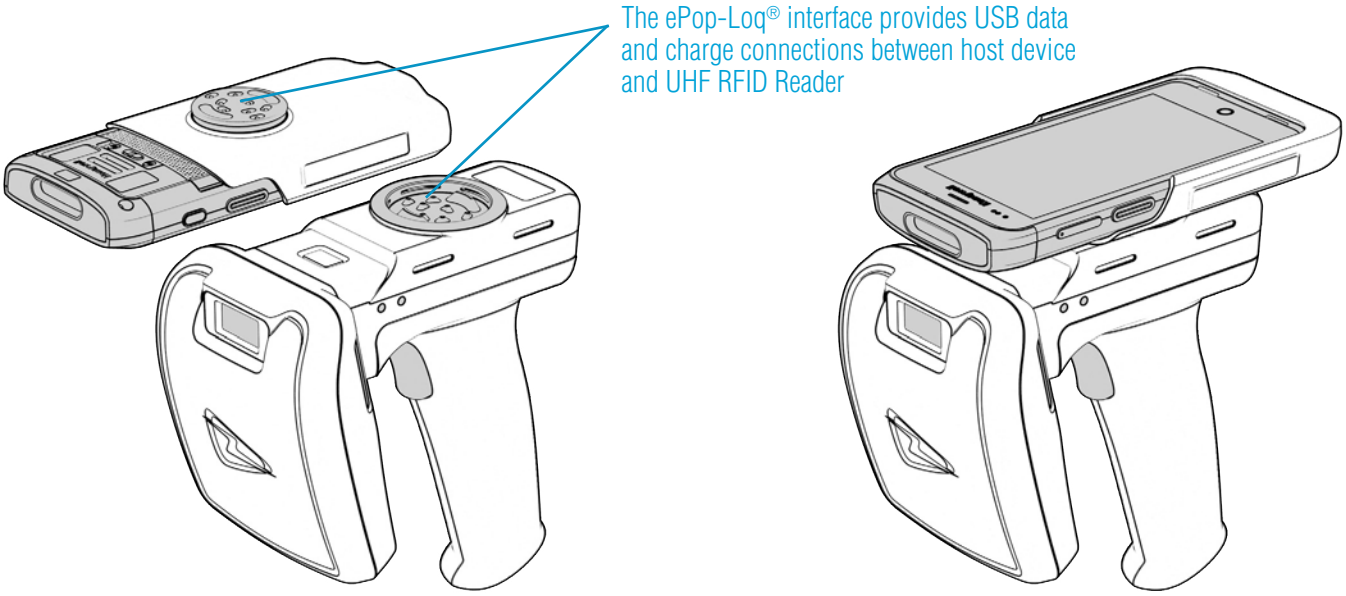

Figure 21: The ePop-Loq® system

USB OPERATING MODES

The ePop-Loq® on the 2128P can be configured in one of two modes – Charge-Only or Charge-and-Data. Please ensure the mode required is correctly configured.

- Charge-Only mode: Both the 2128P UHF Reader and the mounted device will be charged when docked in the charging cradle, but will never use the USB data connection.
- Charge-and-Data mode: Compatible devices will use the USB data connection when not in the charging cradle. Note that USB data connection to the 2128P requires a custom application that supports the TSL® ASCII protocol over USB.

N.B. The USB connector on the charging cradle is always available when the 2128P is docked.

CHANGING THE USB OPERATING MODE

The factory default mode for the 2128P ePop-Loq® is Charge-and-Data.

The *TSL Reader Configuration App* can be used to switch the USB operating mode in an easy manner.

Alternatively, the USB operating mode may be changed by adding commands to an AUTO.TXT file placed in the root directory of a Micro SD card in the reader.

Set USB mode to Charge-Only:

1. Create a blank AUTO.TXT file.
2. Add the following command to the AUTO.TXT file (without quotation marks):
   "**.fd -ep co**"
3. Place the AUTO.TXT within the the root directory of a Micro SD card in the reader.
4. Restart the reader

Set USB mode to Charge-and-Data:

1. Create a blank AUTO.TXT file.
2. Add the following command to the AUTO.TXT file (without quotation marks):
   "**.fd -ep cd**"
3. Place the AUTO.TXT within the the root directory of a Micro SD card in the reader.
4. Restart the reader

N.B. The ePop-Loq® USB mode is non-volatile and the command may be safely removed from the AUTO.TXT file after it has been run once.

Copyright © 2019 Technology Solutions (UK) Ltd

BLUETOOTH® WIRELESS TECHNOLOGY CONNECTION

SUPPORTED APPLE iOS DEVICES

Made for

- iPhone Xs
- iPhone 8
- iPhone 8 Plus
- iPhone 6s
- iPhone 6s Plus
- iPhone 6
- iPhone 6 Plus
- iPad Pro (10.5-inch)
- iPad 5th generation
- iPad Pro (12.9-inch) 1st generation
- iPad Air
- iPod touch 6th generation

OTHER COMPATIBLE PRODUCTS

The 2128P *Bluetooth*® Handheld UHF RFID Reader is compatible with many other *Bluetooth*® wireless technology enabled host devices including Android, Windows CE, Windows Mobile 5/6.1/6.5 and Windows XP/Vista/7/8/10.

Copyright © 2019 Technology Solutions (UK) Ltd

COMPARISON OF *BLUETOOTH*® OPERATING MODES

Our UHF RFID *Bluetooth*® readers support two modes of operation over *Bluetooth*®. When connected via USB the reader always supports the TSL® ASCII 2 protocol, but when connected over *Bluetooth*® the reader can either be set to use the TSL® ASCII 2 protocol (*Bluetooth*® SPP Mode) or it can appear as a *Bluetooth*® keyboard (*Bluetooth*® HID Mode).

The comparison chart below is designed to help you understand the differences between the two operating modes:

***Bluetooth*® SPP Mode**	***Bluetooth*® HID Mode**
Apps need to be written with specific support for the Reader	Apps can use the Reader without modification
The Reader can be discovered and paired in the Bluetooth Settings or from within the App but the App controls the connection • Connects when instructed by the App • Disconnects when instructed by the App • The reader powers off when no longer connected and idle • The App needs to connect to restore	Reader is discovered and paired in the Host Bluetooth Settings (often appears as a Keyboard) • After pairing the reader connects automatically • If idle the reader sleeps and the connection is dropped • The reader, when woken, automatically reconnects to the host device
Apps receive and interpret TSL® ASCII 2 Protocol responses when the user triggers a UHF or barcode scan	Apps receive input as Key strokes from the reader including Tab and Return/Enter keys
The App can respond and react intelligently to responses e.g. • duplicate responses can be ignored or counted • incoming tag data can be truncated, stripped or transformed into alternative representations: Hex, ASCII, GS1 EPC URI, etc…	The reader types text for each barcode/UHF scan received • The tag values can be returned in Hex or ASCII representations • Up to 2 Additional characters can be inserted before and after the text sent • The reader cannot truncate or strip values from tag data
The App can change the Reader's behaviour	The Reader can only send scanned data to the host, the host cannot change the reader's behaviour
The Reader's behaviour and command parameters are controlled in real time by the App e.g. the trigger action can change to suit the task that the User is performing; the App can allow the User to specify Inventory output power	The Reader's behaviour, such as the action of the reader's trigger switch, the inventory output power, the idle sleep timeout and other command parameters can be configured only once at start-up.
Configuration is held within the App (any configuration in the AUTO.TXT is likely to be overridden by the App settings)	All configuration is held in an AUTO.TXT file stored on the (optional) SD card. Removing the SD card or deleting the AUTO.TXT and power-cycling the unit restores default settings.
All reader activity, by default, is saved to a log file if an SD-Card is fitted.	All reader activity, by default, is saved to a log file if an SD-card is fitted.

Copyright © 2019 Technology Solutions (UK) Ltd

CHANGING THE *BLUETOOTH*® OPERATING MODE

TSL® *Bluetooth*® UHF RFID Readers can be operated in *SPP mode* where the Reader is controlled by a custom-written application or in *HID mode*, where the Reader behaves like a *Bluetooth*® Keyboard.

The HID mode has two variants[i] :

1. *HID mode* — Compatible with Android, Windows and supported Apple iOS Devices
2. *HID Apple mode* — Compatible only with supported Apple iOS Devices, providing an on-screen keyboard toggle

The *Bluetooth*® operating mode of a TSL® UHF RFID Reader can be changed using the steps detailed below.

PREPARATION:

Download and install the "*TSL® PC Firmware Downloader*" from the Reader product download page (free, one time, registration required): www.tsl.com/2128p-downloads

TO SWITCH TO *BLUETOOTH*® HID MODE:

- First delete existing pairings to the UHF reader
- Launch the Firmware Downloader (*Desktop Firmware Loader*)
- Connect the UHF reader to the computer using the supplied USB cable.
- The driver should install automatically (*)
- The downloader should prompt as the com port arrives and select the com port automatically ("`COMn arrived`")
- Select **Action>Reset Bluetooth to HID mode** or **Action>Reset Bluetooth to HID Apple mode** (wait for the process to complete)
- Disconnect the UHF reader from the computer (unplug USB)
- Wake the UHF reader (pull trigger, blue flashing LED)
- Pair to the reader on the device (it typically appears as a keyboard icon and connects automatically)
- Scanned data should now be typed into the current application on the device

TO SWITCH TO *BLUETOOTH*® SPP MODE:

- First delete existing pairings to the UHF reader
- Launch the downloader (*Desktop Firmware Loader*)
- Connect the UHF reader to the computer using the supplied USB cable.
- The driver should install automatically (*)
- The downloader should prompt as the com port arrives and select the com port automatically ("`COMn arrived`")
- Select **Action>Reset Bluetooth to SPP mode** (wait for the process to complete)
- Disconnect the UHF reader from the computer (unplug USB)
- Wake the UHF reader (pull trigger, blue flashing LED)
- Pair to the reader on the device
- Launch an Application (e.g. *RFID Explorer*) to use the reader

(*) if not download from here http://www.ftdichip.com/Drivers/VCP.htm

FURTHER INFORMATION

Further information can be found from the Reader Download pages (free, one-time, registration required - see links above)

Application Note – Bluetooth® HID mode: Provides further examples for configuring HID mode
Application Note – Using the Micro SD log and auto-run files: Describes using the AUTO.TXT
TSL® ASCII Protocol 2.4 Rev B : Details all the commands including for HID `.st`, `.hs`, `.hc`, and `.hd`

If you encounter any issue while following the above procedure please contact *support@tsl.com* providing the following information:

- The serial number of the UHF Reader
- The Firmware version of the UHF Reader
- The step at which the procedure failed
- A description of the fault that occurred

---

[i]Firmware requirements: 1128 - v4.2.7 or greater; 1153 – v2.1.7 or greater; 1166 – v1.1.6 or greater

SETTING UP A *BLUETOOTH*® CONNECTION WITH A SUPPORTED APPLE iOS DEVICE

Awaken the 2128 UHF Reader by squeezing the trigger, which is confirmed by the flashing of the blue LED. To pair with your iOS device, navigate to the *Bluetooth*® option within the Settings menu on your iOS device.

VIEW LIST OF *BLUETOOTH*® DEVICES (iOS 7)

iPad® :

- Go to the Settings App.
- Select the *Bluetooth*® settings in the left hand column.

Figure 22: List of devices in *Bluetooth*® settings

iPod® / iPhone® :

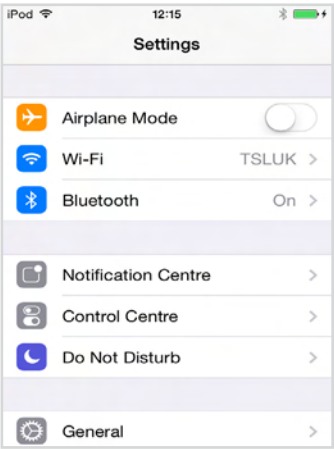

- Go to the Settings App.

Figure 23: Select *Bluetooth*® settings

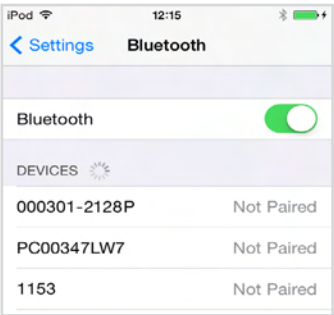

- Tap on the *Bluetooth*® row to be taken to the *Bluetooth*® settings

Figure 24: List of devices in *Bluetooth*® settings

PAIR WITH TSL® *BLUETOOTH*® DEVICE

In the list of *Bluetooth*® devices, the 2128P UHF reader will be identified by its serial number (2128P-xxxxxx). Click on the corresponding row to pair with the reader.

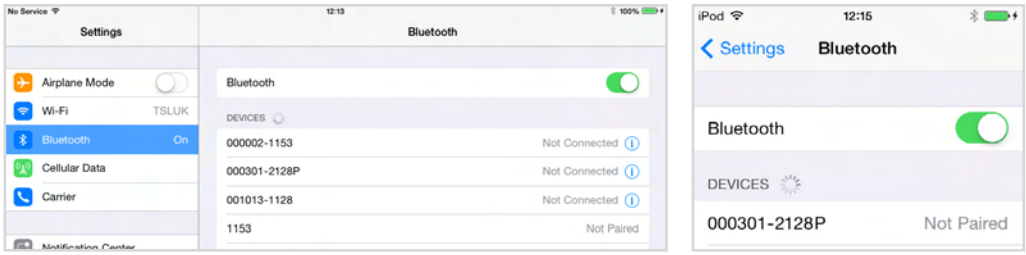

iPad®

iPod® / iPhone®

Figure 25: Identify device

After successfully pairing with the 2128P UHF Reader the device will be shown as 'connected'.

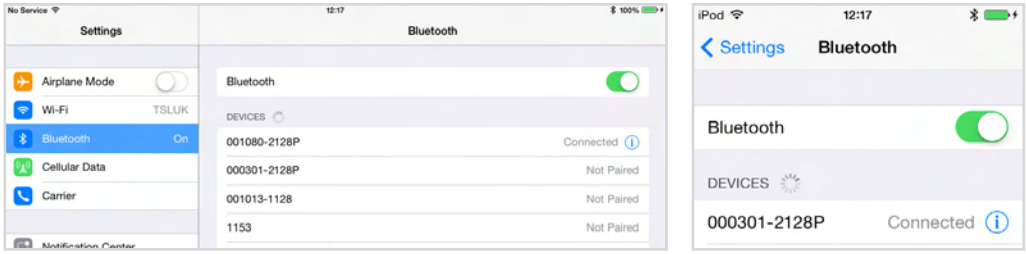

iPad®

iPod® / iPhone®

Figure 26: Device connected

If RFID Explorer is installed on your device then a prompt will appear requesting a connection to the newly added reader. Choose 'Allow' to launch RFID Explorer or 'Ignore' if the device is to be used with a different App.

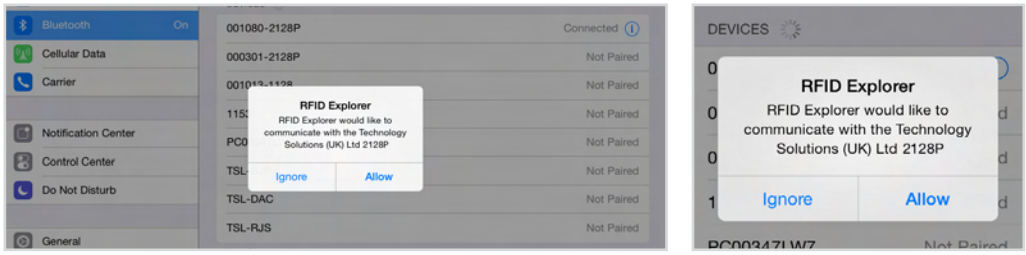

iPad®

iPod® / iPhone®

Figure 27: Allow connection

Open TSL's RFID Explorer App.

The RFID Explorer App can be downloaded from the App Store.

If the app is starting up for the first time, no reader will be selected. To select a reader, tap on 'Change Reader' in the menu to the left (iPad®) or 'Paired Readers' (iPod®/iPhone®).

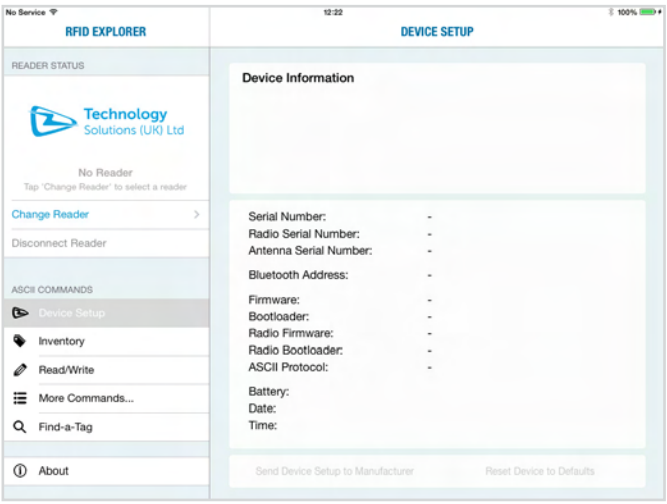

iPad®

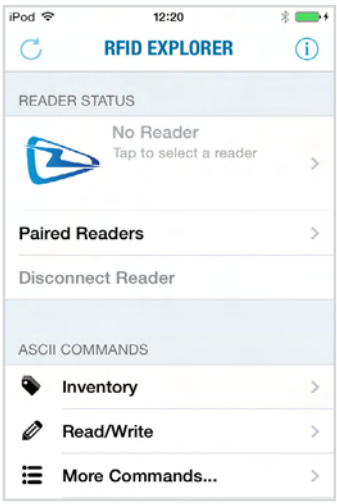

iPod® / iPhone®

Figure 28: TSL® RFID Explorer App on first load - no reader selected

If you have a reader selected from your device's *Bluetooth*® settings as previously shown, continue from Figure 28. If the 'No devices are available' message in Figure 25 appears, you can also connect to a device through the RFID Explorer app. Press the + sign presented in the top right corner of the Select Reader section/screen.

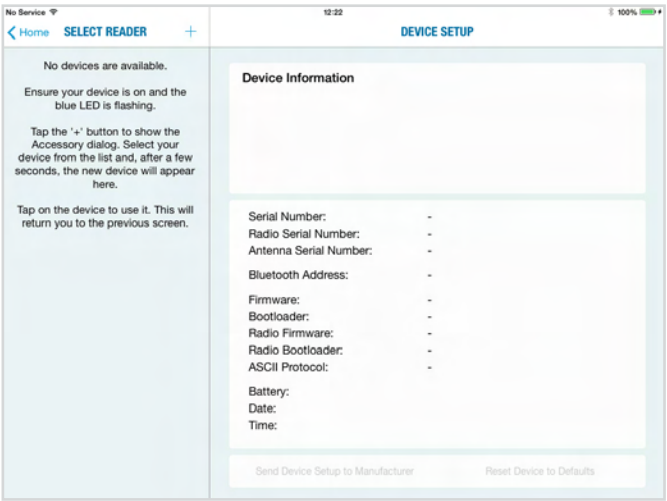

iPad®

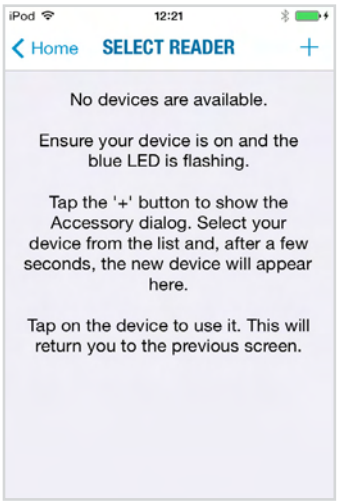

iPod® / iPhone®

Figure 29: No devices are available

This will open a 'Select An Accessory' dialog box.
There may be a small delay in loading available readers.

Once the available readers have loaded select the 2128P UHF reader.

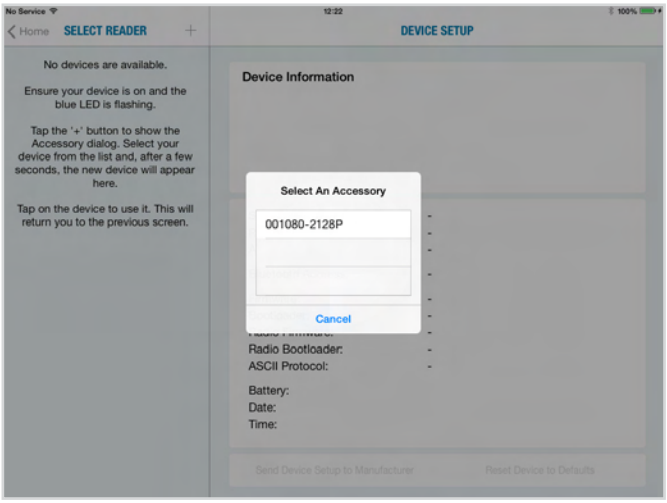

iPad®

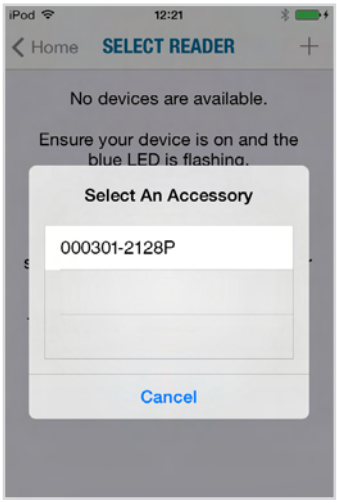

iPod® / iPhone®

Figure 30: Select the Reader to use

A list of compatible and currently paired *Bluetooth*® devices will appear. Select the device to be used with the RFID Explorer App.

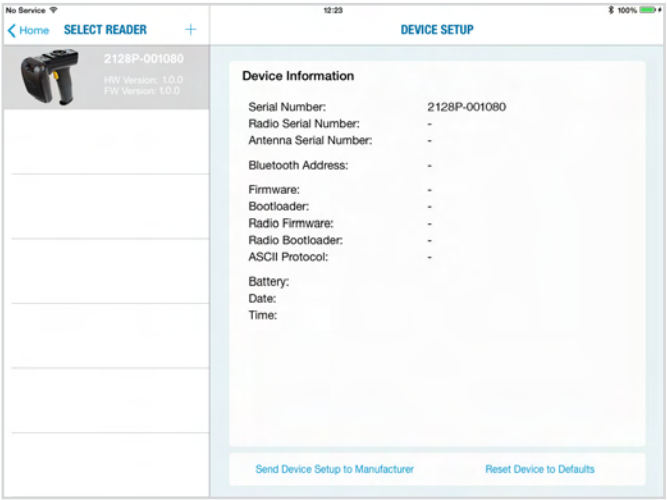

iPad®

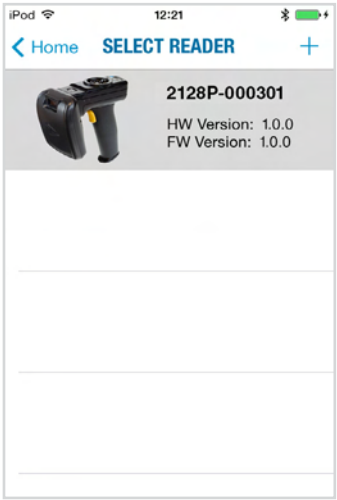

iPod® / iPhone®

Figure 31: List of paired *Bluetooth*® devices

The selected device's image will appear, accompanied by relevant device information. The 'Inventory', 'Read/Write', 'Commands' and 'Find a Tag' features can now be explored. To maximise battery life it is recommended to release the 2128P UHF Reader from its *Bluetooth*® connection if the reader is not to be used for a significant period of time.

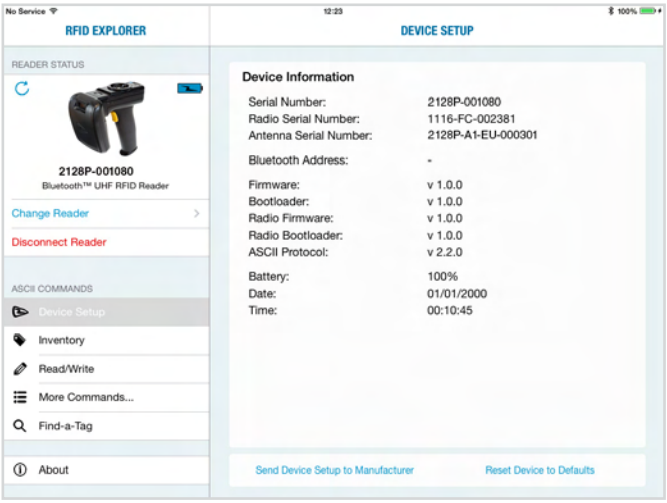

iPad®

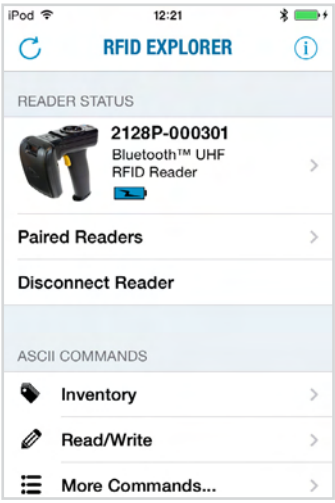

iPod® / iPhone®

Figure 32: 2128P UHF Reader selected and ready to use

MICRO SD CARD

INSTALLATION AND REMOVAL

An optional Micro SD card can be installed in to the 2128P reader. The card should be SD/SDHC compatible, FAT16 or FAT32, with a maximum capacity of 32 GB.

The card is inserted into the marked slot in the battery compartment. The Micro SD card slot is spring loaded. After inserting the card into the slot, push and release the card once to lock the card into the holder. Once locked in a further push and release a will eject the card and it can then be removed from the slot.

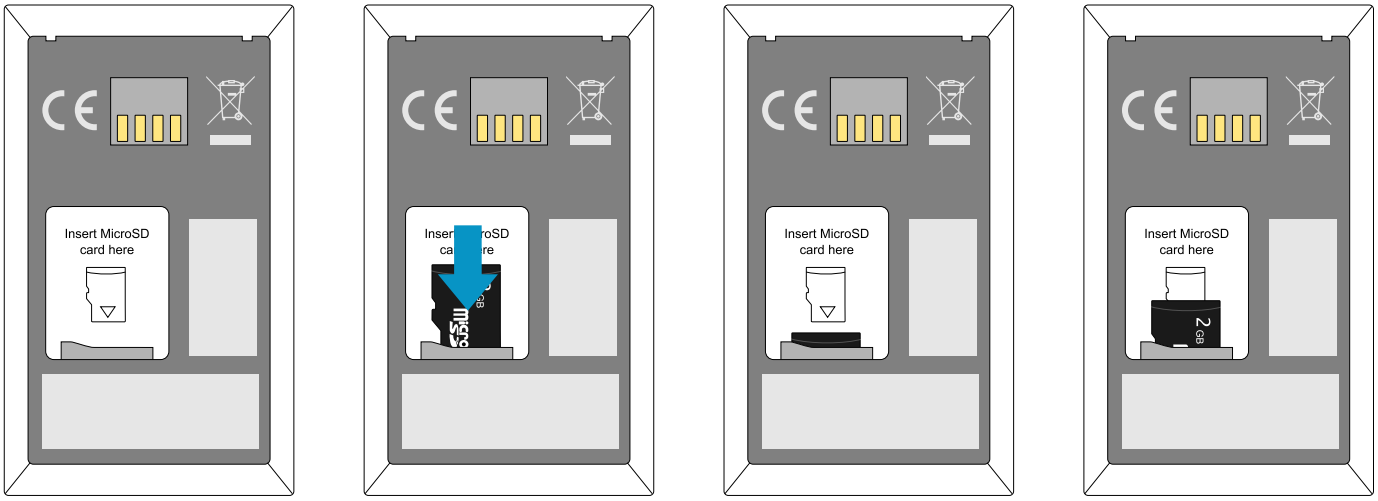

Figure 33: Micro SD Card Insertion and Removal

AUTO RUN FILE (AUTO.TXT)

Once an SD card is installed an Auto Run file can be created on the SD card. The Auto Run file contains a list of ASCII 2 commands that are executed as the 2128P powers up. The file should be located at the root of the card and called “AUTO.TXT”. Although the file can contain any valid ASCII 2 commands, one per line, it is intended that these have the take no action ‘-n’ flag specified to allow the default parameters for any command to be changed from the firmware defaults as the unit boots without actually executing the command.

For example to change the carrier power of the inventory command from 29dBm to 20dBm ‘.iv -o20 -n’ would be appended to the Auto Run file. As is the behaviour with command parameters this will set the output power for the inventory command until a new value is sent with this command. Therefore the inventories executed by the trigger, which executes ‘.iv’ will use the modified output power.

The Auto Run file can be manually created on the card before it is inserted into the 2128P or the ASCII 2 command Write Command to Auto Run File ‘.wa’ can be used. The Read Auto Run File ‘.ra’ can be used to read back the contents of the Auto Run file or delete the file from the card.

Copyright © 2019 Technology Solutions (UK) Ltd

LOG FILE (LOG.TXT)

Once an SD card is installed and logging is enabled a log file is created on the SD card. The file is located at the root of the card and called “LOG.TXT”. All the lines from every response to every command that is executed by the reader (including those performed from trigger actions) are appended to the end of the file. Events such as Power up are also appended to the file.
The ASCII 2 Read Log File command (‘.rl’) is provided to enable or disable logging, to read the log file from the card or to delete the log file from the card.
Please note that the log file can quickly become large relative to the speed at which it can be downloaded using the Read Log File Command.
Start of a sample log output:

```
DT: 2013-11-15T16:46:58
EV: Log File created
CS: .ws -sa4 -sbepc -sd300833B2DDD9014000000000 -sl06 -so0002 -sts2 -dbepc -da330DE29525C0210005F5F88A
-dl06 -do0002
WW: 0
ME: No Transponder found
ER:005
DT: 2013-11-15T17:58:28
EV: Disconnected
DT: 2013-11-15T17:59:28
EV: Sleep
DT: 2013-11-18T09:18:21
EV: Wake up
CS: .al –dlon
OK:
DT: 2013-11-18T09:19:22
EV: Sleep
DT: 2013-11-18T10:07:42
EV: Wake up
DT: 2013-11-18T10:07:42
EV: Connected USB
CS: .al –dlon
OK:
CS: .iv LCMD 000000 -qss0 –qta
EP: 330DE29525C0210005F5F8F2
EP: 221001500000000000000027
OK:
```

SOFTWARE DEVELOPMENT

To make full use of the functionality of the 2128P UHF Reader, a customised software application will be required.

The new 2128P *Bluetooth*® UHF RFID reader incorporates TSL's unique ASCII protocol for faster and easier application development. This sophisticated parameterised ASCII protocol provides the developer a powerful set of commands that carry out multiple actions locally within the *Bluetooth*® reader. This approach enables multiple tag operations executed using simple pre-configured ASCII commands which not only speeds integration of the reader into applications but also abstracts the developer from some of the complexities of the underlying Native API. Simple, text based commands are sent to the reader and responses are returned as text. This allows straightforward access to RFID tag functions such as inventory, read and write. Details of the ASCII command mode are available for download from www.tsl.com/2128p-downloads.

Copyright © 2019 Technology Solutions (UK) Ltd

TROUBLESHOOTING AND MAINTENANCE

MAINTENANCE

For trouble-free service please observe the following tips when using the 2128P UHF Reader:

- Protect the 2128P UHF Reader from temperature extremes. Do not leave it on the dashboard of a car on a hot day, and keep it away from heat sources.

TROUBLESHOOTING

Symptoms	Possible cause	Action
Nothing happens when the yellow button is pressed.	If the LEDs are not on then the battery may be flat.	Charge the 2128P UHF Reader.
	The 2128P UHF Reader may have button actions disabled.	Check the 2128P UHF Reader configuration and restore to defaults if unsure.
	Other.	Work through *Troubleshooting Guide* on TSL® Website
The orange LED flashes rapidly when charging.	There is a battery fault.	Replace the battery pack.
	The battery pack temperature is outside recommended limits.	Ensure that charging only occurs between 5°C and 40°C.
The host *Bluetooth*® discovery does not find the 2128P UHF Reader.	The 2128P UHF Reader has powered off.	Press the yellow button and ensure the blue LED is flashing.
	The 2128P UHF Reader is out of range.	Move the 2128P UHF Reader closer to the host.
	The *Bluetooth*® friendly name of the 2128P UHF Reader has been changed.	Check the *Bluetooth*® friendly name or restore the 2128P UHF Reader to factory defaults if unsure.
Opening the *Bluetooth*® virtual com port does not connect to the 2128P UHF Reader.	The host has paired to a different *Bluetooth*® device.	Pair to the required 2128P UHF Reader.
	The host *Bluetooth*® function has an error.	Warm boot the host. If this does not help, delete the 2128P UHF Reader from the favourites list and re-pair.
Bluetooth® pairing fails.	Reader SPP/HID operating Mode may have changed.	In the *Bluetooth*® Settings, Forget/ Unpair the Reader and try again.
Other symptoms.	Other fault.	Run *ASCII Remote Diagnostic* and email result to *support@tsl.com* along with a description of the problem.

Copyright © 2019 Technology Solutions (UK) Ltd

REGULATORY INFORMATION

CE MARKING AND EUROPEAN ECONOMIC AREA (EEA)

Technology Solutions UK Ltd hereby declares that this radio equipment is in compliance with Directives 2014/53/EU and 2011/65/EU.

The reader operates using the specified frequencies up to the maximum output powers as in the table below:

Radio	Frequency of operation	Maximum Output Power
Bluetooth®	2.4 GHz	12 dBm
UHF RFID	865 MHz - 868 MHz	30 dBm

INFORMATION TO THE USER – FCC

Federal Communication Commission Interference Statement

This device complies with Part 15 of the FCC Rules. Operation is subject to the following two conditions: (1) This device may not cause harmful interference, and (2) this device must accept any interference received, including interference that may cause undesired operation.

NOTE: This equipment has been tested and found to comply with the limits for a Class A digital device, pursuant to part 15 of the FCC Rules. These limits are designed to provide reasonable protection against harmful interference when the equipment is operated in a commercial environment. This equipment generates, uses, and can radiate radio frequency energy and, if not installed and used in accordance with the instruction manual, may cause harmful interference to radio communications. Operation of this equipment in a residential area is likely to cause harmful interference in which case the user will be required to correct the interference at his own expense.

FCC Caution:

- Any changes or modifications not expressly approved by the party responsible for compliance could void the user's authority to operate this equipment.
- This transmitter must not be co-located or operating in conjunction with any other antenna or transmitter.

Radiation Exposure Statement:

The product complies with the FCC portable RF exposure limit set forth for an uncontrolled environment and is safe for intended operation as described in this manual. Further RF exposure reduction can be achieved if the product is kept as far as possible from the user body or the device is set to a lower output power if such function is available.

Copyright © 2019 Technology Solutions (UK) Ltd

CANADIAN WARNING STATEMENTS

English

"Under Industry Canada regulations, this radio transmitter may only operate using an antenna of a type and maximum (or lesser) gain approved for the transmitter by Industry Canada.
To reduce potential radio interference to other users, the antenna type and its gain should be so chosen that the equivalent isotropically radiated power (e.i.r.p.) is not more than that necessary for successful communication."
"This device complies with Industry Canada licence-exempt RSS standard(s). Operation is subject to the following two conditions: (1) this device may not cause interference, and (2) this device must accept any interference, including interference that may cause undesired operation of the device."

Radiation Exposure Statement:

The product complies with the Canada portable RF exposure limit set forth for an uncontrolled environment and is safe for intended operation as described in this manual. Further RF exposure reduction can be achieved if the product is kept as far as possible from the user body or the device is set to a lower output power if such function is available.

French

"Conformément à la réglementation d'Industrie Canada, le présent émetteur radio peut fonctionner avec une antenne d'un type et d'un gain maximal (ou inférieur) approuvé pour l'émetteur par Industrie Canada.
Dans le but de réduire les risques de brouillage radioélectrique à l'intention des autres utilisateurs, il faut choisir le type d'antenne et son gain de sorte que la puissance isotrope rayonnée équivalente (p.i.r.e.) ne dépasse pas l'intensité nécessaire à l'établissement d'une communication satisfaisante."
"Le présent appareil est conforme aux CNR d'Industrie Canada applicables aux appareils radio exempts de licence. L'exploitation est autorisée aux deux conditions suivantes : (1) l'appareil ne doit pas produire de brouillage, et (2) l'utilisateur de l'appareil doit accepter tout brouillage radioélectrique subi, même si le brouillage est susceptible d'en compromettre le fonctionnement."

Déclaration d'exposition aux radiations:

Le produit est conforme aux limites d'exposition pour les appareils portables RF pour les Etats-Unis et le Canada établies pour un environnement non contrôlé.
Le produit est sûr pour un fonctionnement tel que décrit dans ce manuel. La réduction aux expositions RF peut être augmentée si l'appareil peut être conservé aussi loin que possible du corps de l'utilisateur ou que le dispositif est réglé sur la puissance de sortie la plus faible si une telle fonction est disponible.

KOREA WARNING STATEMENT FOR CLASS B ITE

기 종별	사 용 자 안 내 문
B 급 기기 (가정용 방송통신기기)	이 기기는 가정용 (B 급) 으로 전자파적합등록을 한 기기로서 주로 가정에서 사용하는 것을 목적으로 하며 , 모든 지역에서 사용할 수 있습니다 .

LASER WARNING

A warning label is also shown on the back of the antenna when a barcode reader is fitted.

The barcode reader module complies with 21 CFR 1040.10 and 1040.11 except for deviations pursuant to Laser Notice No. 50, dated June 24, 2007, EN60825-1:2007 and IEC60825-1:2001 (Ed.1.2)

Avoid unnecessary exposure to the laser light emitted from the barcode reader.

Caution: Use of controls, adjustments or performance of procedures other than those specified herein may result in hazardous laser light exposure.

Caution: Viewing the illumination from the barcode reader with optical instruments may result in increased hazard.

Copyright © 2019 Technology Solutions (UK) Ltd

HEALTH AND SAFETY RECOMMENDATIONS

Ergonomic Recommendations

Caution: In order to avoid or minimize the potential risk of ergonomic injury, follow the recommendations below. Consult with your local Health & Safety Manager to ensure that you are adhering to your company's safety programs to prevent employee injury.

- Reduce or eliminate repetitive motion
- Maintain a natural position
- Reduce or eliminate excessive force
- Keep objects that are used frequently within easy reach Perform tasks at correct heights
- Reduce or eliminate vibration
- Reduce or eliminate direct pressure
- Provide adjustable workstations
- Provide adequate clearance
- Provide a suitable working environment
- Improve work procedures.

For vehicle installation and use

An air bag inflates with great force. DO NOT place objects, including either installed or portable wireless equipment, in the area over the air bag or in the air bag deployment area. If in-vehicle wireless equipment is improperly installed and the air bag inflates, serious injury could result.

RF signals may affect improperly installed or inadequately shielded electronic systems in motor vehicles (including safety systems). Check with the manufacturer or its representative regarding your vehicle. You should also consult the manufacturer of any equipment that has been added to your vehicle.

Power Supply

Use only TSL-approved cradles, chargers and power supplies with the 2128P UHF Reader. Use of an alternative power supply will invalidate any approval given to this device, void the warranty for the product and may be dangerous.

Copyright © 2019 Technology Solutions (UK) Ltd

Waste Electrical and Electronic Equipment (WEEE)

For EU Customers: All products at the end of their life must be returned to TSL® for recycling. For information on how to return product please contact TSL.

WARRANTY

(A) Warranty

TSL's hardware Products are warranted against defects in workmanship and materials for a period of twelve (12) months from the date of shipment, unless otherwise provided by TSL® in writing, provided the Product remains unmodified and is operated under normal and proper conditions. Warranty provisions and durations on software, integrated installed systems, Product modified or designed to meet specific customer specifications ("Custom Products"), remanufactured products, and reconditioned or upgraded products, shall be as provided in the applicable Product specification in effect at the time of purchase or in the accompanying software license.

(B) Spare Parts

Spare parts (i.e. parts, components, or subassemblies sold by TSL® for use in the service and maintenance of Products) are warranted against defects in workmanship and materials for a period of thirty (30) days from the date of shipment. Spare parts may be new or originate from returned units under the conditions set forth in subsection D below.

(C) Repair of TSL® branded hardware

For repairs on TSL® branded hardware Products under this Agreement, including repairs covered by warranty, the repair services provided are warranted against defects in workmanship and materials on the repaired component of the Product for a period of thirty (30) days from the shipment date of the repaired Product, or until the end of the original warranty period, whichever is longer. Any such defects shall be notified to TSL® in writing within 7 days of the same becoming apparent.

(D) Product Service

Products may be serviced or manufactured with parts, components, or subassemblies that originate from returned products and that have been tested as meeting applicable specifications for equivalent new material and Products. The sole obligation of TSL® for defective hardware Products is limited to repair or replacement (at TSL's option) on a "return to base (RTB)" basis with prior TSL® authorisation.

Customer is responsible for prompt shipment to TSL® and assumes all costs and risks associated with this transportation; return shipment to the Customer will be at TSL's expense. Customer shall be responsible for return shipment charges for product returned where TSL® determines there is no defect ("No Defect Found"), or for product returned that TSL® determines is not eligible for warranty repair. No charge will be made to Buyer for replacement parts for warranty repairs. TSL® is not responsible for any damage to or loss of any software programs, data or removable data storage media, or the restoration or reinstallation of any software programs or data other than the software, if any, installed by TSL® during manufacture of the Product.

Copyright © 2019 Technology Solutions (UK) Ltd

(E) Original Warranty Period

Except for the warranty applying solely to the repaired component arising from a repair service as provided in Section C above, the aforementioned provisions do not extend the original warranty period of any Product that had either been repaired or replaced by TSL.

(F) Warranty Provisions

The above warranty provisions shall not apply to any Product:
(i) which has been repaired, tampered with, altered or modified, except by TSL's authorized service personnel;
(ii) in which the defects or damage to the Product result from normal wear and tear, misuse, negligence, improper storage, water or other liquids, battery leakage, use of parts or accessories not approved or supplied by TSL, or failure to perform operator handling and scheduled maintenance instructions supplied by TSL;
(iii) which has been subjected to unusual physical or electrical stress, abuse, or accident, or forces or exposure beyond normal use within the specified operational and environmental parameters set forth in the applicable Product specification; nor shall the above warranty provisions apply to any expendable or consumable items, such as batteries, supplied with the Product.

EXCEPT FOR THE WARRANTY OF TITLE AND THE EXPRESS WARRANTIES STATED ABOVE, TSL® DISCLAIMS ALL WARRANTIES ON PRODUCTS FURNISHED HEREUNDER INCLUDING ALL IMPLIED WARRANTIES OF MERCHANTABILITY AND FITNESS FOR A PARTICULAR USE. ANY IMPLIED WARRANTIES THAT MAY BE IMPOSED BY LAW ARE LIMITED IN DURATION TO THE LIMITED WARRANTY PERIOD. SOME STATES OR COUNTRIES DO NOT ALLOW A LIMITATION ON HOW LONG AN IMPLIED WARRANTY LASTS OR THE EXCLUSION OR LIMITATION OF INCIDENTAL OR CONSEQUENTIAL DAMAGES OR CONSUMER PRODUCTS. IN SUCH STATES OR COUNTRIES, FOR SUCH PRODUCTS, SOME EXCLUSIONS OR LIMITATIONS OF THIS LIMITED WARRANTY MAY NOT APPLY.

The stated express warranties are in lieu of all obligations or liabilities on the part of TSL® for damages, including but not limited to, special, indirect or consequential damages arising out of or in connection with the use or performance of the Product or service. TSL's liability for damages to Buyer or others resulting from the use of any Product or service furnished hereunder shall in no way exceed the purchase price of said Product or the fair market value of said service, except in instances of injury to persons or property.

TSL® is not responsible for any damages incurred during shipment if the approved shipping container is not used. Shipping the units improperly can possibly void the warranty. If the original shipping container was not kept, contact your local distributor or TSL® to have another sent to you.

TSL® shall not be responsible for any injury, damage or loss of whatever kind caused directly or indirectly by the goods whether as a result of their manufacture, operation, use or otherwise and the customer shall indemnify TSL® from any claim arising from any loss suffered by any third party.

Copyright © 2019 Technology Solutions (UK) Ltd

ABOUT TSL®

ABOUT

TSL® | Global Leaders in Mobile RFID

Technology Solutions UK Ltd (TSL®) is a leading manufacturer of high performance mobile RFID readers used to identify and track products, assets, data or personnel.

For over two decades, TSL® has delivered innovative data capture solutions to Fortune 500 companies around the world using a global network of distributors and system integrators. Specialist in-house teams design all aspects of the finished products and software ecosystems, including electronics, firmware, application development tools, RF design and injection mould tooling.

TSL® is an ISO 9001:2015 certified company.

ISO 9001: 2015

CONTACT

Address:	Technology Solutions (UK) Ltd, Suite A, Loughborough Technology Centre, Epinal Way, Loughborough, Leicestershire, LE11 3GE, United Kingdom.
Telephone:	+44 1509 238248
Fax:	+44 1509 214144
Email:	enquiries@tsl.com
Website:	www.tsl.com

Made for iPhone | iPad | iPod

Copyright © 2019 Technology Solutions (UK) Ltd. All rights reserved. Technology Solutions (UK) Limited reserves the right to change its products, specifications and services at any time without notice.