TECHNOLOGY SOLUTIONS UK LTD
part of HID

USER GUIDE:
3138 *BLUETOOTH*®
UHF RFID RAIN READER

www.tsl.com
Design • Development • Manufacture

TERMS & CONDITIONS

Copyright © 2025 Technology Solutions (UK) Ltd. All rights reserved.

No part of this publication may be reproduced or used in any form, or by any electrical or mechanical means, without permission in writing from Technology Solutions (UK) Ltd. This includes electronic or mechanical means,such as photocopying, recording, or information storage and retrieval systems. The material in this manual is subject to change without notice.

Technology Solutions (UK) Ltd (TSL®) reserves the right to make changes to any software or product to improve reliability, function, or design. TSL does not assume any product liability arising out of, or in connection with, the application or use of any product, circuit, or application described herein. No license is granted, either expressly or by implication, estoppel, or otherwise under any patent right or patent, covering or relating to any combination, system, apparatus, machine, material, method, or process in which TSL products might be used. An implied license exists only for equipment, circuits, and subsystems contained in TSL products. TSL and the TSL logo are registered trademarks of TSL. Other product names mentioned in this manual may be trademarks or registered trademarks of their respective companies and are hereby acknowledged.

All software is provided strictly on an “as is” basis. All software, including firmware, furnished to the user is on a licensed basis. TSL grants to the user a non-transferable and non-exclusive license to use each software or firmware program delivered hereunder (licensed program). Except as noted below, such license may not be assigned, sublicensed, or otherwise transferred by the user without prior written consent of TSL. No right to copy a licensed program in whole or in part is granted, except as permitted under copyright law. The user shall not modify, merge, or incorporate any form or portion of a licensed program with other program material, create a derivative work from a licensed program, or use a licensed program in a network without written permission from TSL. The user agrees to maintain TSL’s copyright notice on the licensed programs delivered hereunder, and to include the same on any authorized copies it makes, in whole or in part. The user agrees not to decompile, disassemble, decode, or reverse engineer any licensed program delivered to the user or any portion thereof.

iPad, iPad Air, iPad mini, iPad Pro, iPhone, iPod, iPod touch are trademarks of Apple Inc., registered in the U.S. and other countries. IOS is a trademark or registered trademark of Cisco in the U.S. and other countries and is used under license.

Use of the Made for Apple badge means that an accessory has been designed to connect specifically to the Apple product(s) identified in the badge and has been certified by the developer to meet Apple performance standards. Apple is not responsible for the operation of this device or its compliance with safety and regulatory standards.

The *Bluetooth*® word mark and logos are registered trademarks owned by Bluetooth SIG, Inc. and any use of such marks by Technology Solutions (UK) Ltd is under license. Other trademarks and trade names are those of their respective owners.

CONTENT

Introduction....4
- Parts of the 3138 UHF Reader....4
- Potential Configurations of the 3138 UHF Reader....5
- Technical Specifications....6

Using the 3138 UHF RFID Reader....7
- Power Handle Installation or Removal....7
- Inserting or Removing a Micro SD Card....9
- Attaching Devices via the ePop-Loq® Socket....11
- Charging....12
- Button Operation....14
- Controlling the Trigger Button Through ASCII Commands....14
- Reading Transponders....15
- Status LEDs....16

Connections....21
- USB Connection....21
- Bluetooth Wireless Technology Connection....22
- Comparison of Bluetooth Operating Modes....23
- Changing the Bluetooth Operating Mode....24
- Changing the Bluetooth Operating Mode Using Command Scan....25
- Setting up a Bluetooth Connection with an Apple iOS Device....26

Micro SD Card Contents....31
- Auto Run File (AUTO.TXT)....31
- Log File (LOG.TXT)....31

Software Development....32

Command Scan....33
- What is Command Scan?....33
- Using Command Scan to Switch Bluetooth Mode....33
- More Information....33

Troubleshooting and Maintenance....34
- Maintenance....34
- Troubleshooting....34

Regulatory Information....35
- CE Mark Warning....35
- Information to the User – FCC....35
- Marking and European Economic Area (EEA)....35
- Canadian Warning Statements....36
- Battery Safety....37

Health and Safety Recommendations....38

Waste Electrical and Electronic Equipment (WEEE)....39

Warranty....39

About....41
- About TSL....41
- Contact....41
- About HID....41

Copyright © 2025 Technology Solutions (UK) Ltd

INTRODUCTION

The TSL 3138 Bluetooth UHF RFID Reader provides Ultra High Frequency (UHF) Radio Frequency Identification (RFID), with optional barcode scanning functionality. The unit can be used in batch mode using an optional Micro SD card, or can be connected via USB through the ePop-Loq® socket, or connected to a host device via Bluetooth. The 3138 can read and write to EPC Global Class 1 Gen 2 UHF RFID transponders.

PARTS OF THE 3138 UHF READER

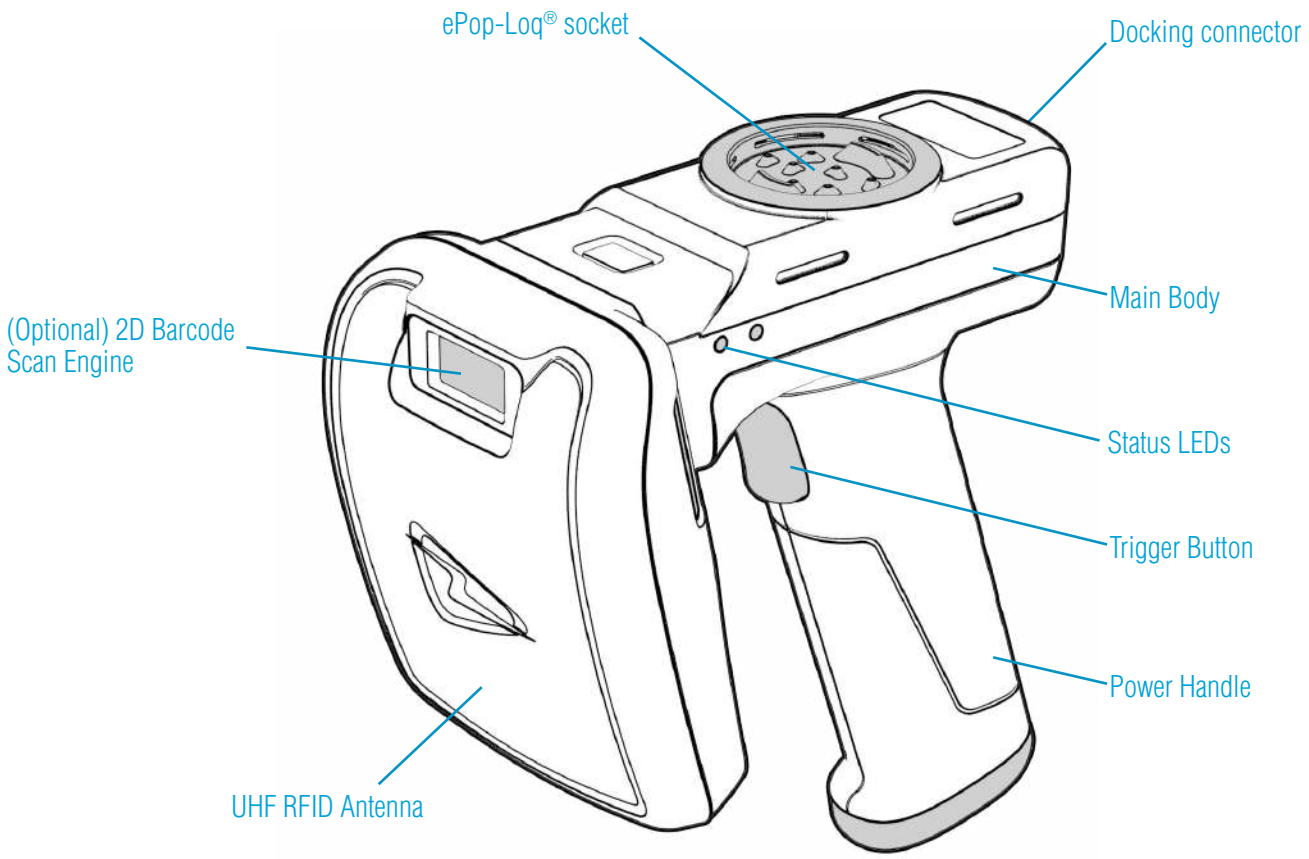

Figure 1: 3138 Reader with UHF RFID Antenna, 2D Barcode Imager and Power Handle

POTENTIAL CONFIGURATIONS OF THE 3138 UHF READER

Barcode scanning capability

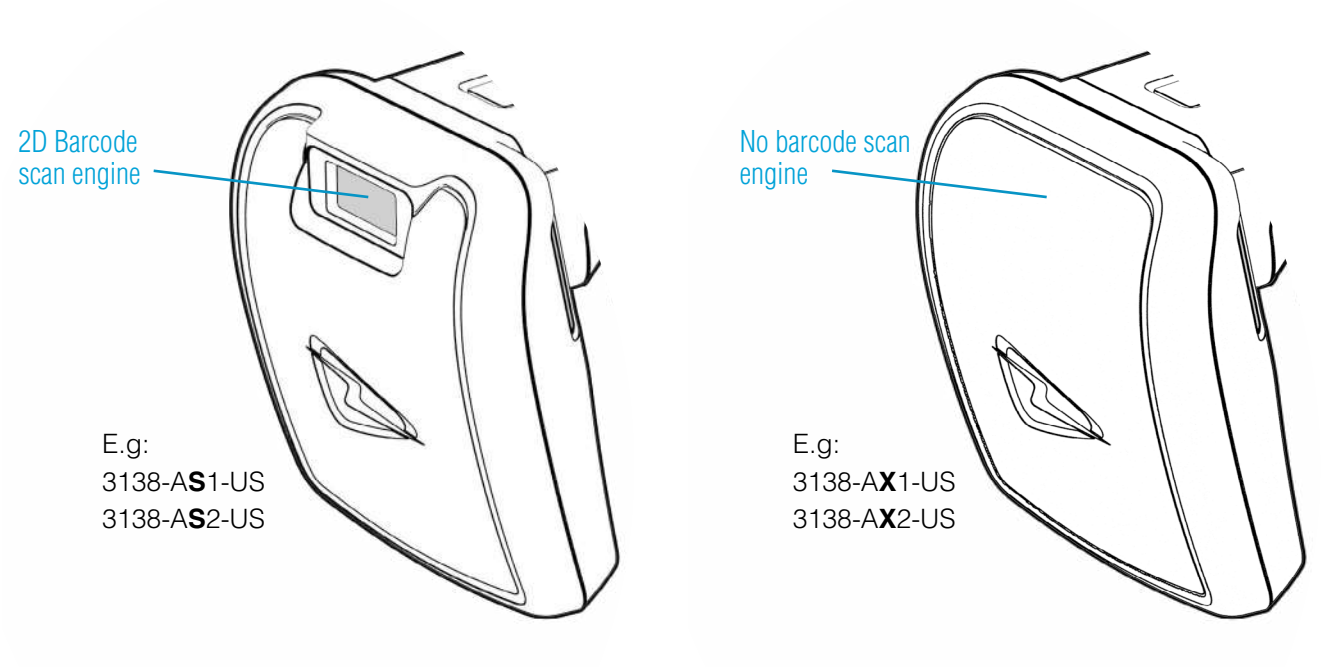

Figure 2: The 3138 Reader can be supplied with or without a 2D barcode imager (for reading 1D and 2D barcodes)

Power Handle connection

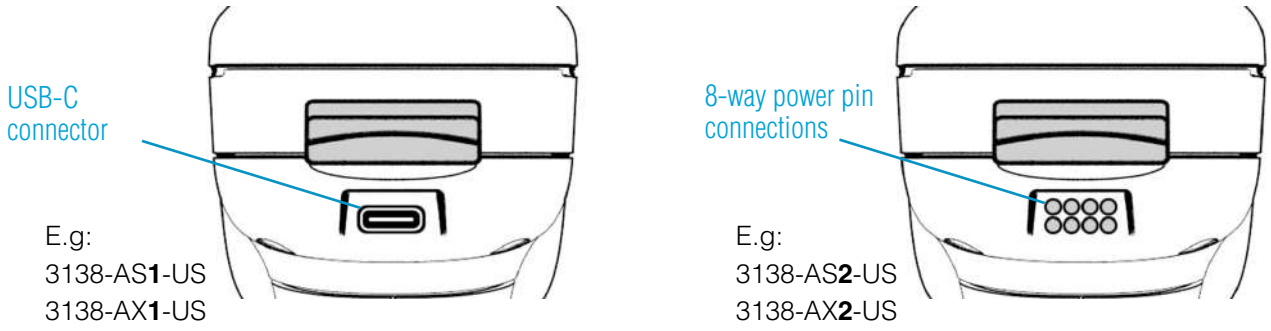

Figure 3: The 3138 Reader can be supplied with a Power Handle with a USB-C connector, or a Power Handle with 8-way Power Pin connections - for use with a docking cradle.

TECHNICAL SPECIFICATIONS

Physical and Environmental Characteristics

Dimensions:	158 x 98 x 170 mm (LxWxH).
Weight:	550g (including Power Handle)
User input:	Trigger button.
User feedback:	Speaker, vibration motor, LED - user configurable.
Power:	Rechargeable 25.4Wh, 7.3V Lithium Polymer battery pack
Minimum operating time[1]:	Light use[2]: 20 hrs Moderate use[3]: 11 hrs Heavy use[4]: 6.5 hrs (preliminary estimates)
Supported USB Power Delivery (PD) Profiles:	Fixed PDOs at 5V/3A, 9V/3A, 15V/3A (up to 45W max)
Enclosure materials:	Polycarbonate.

Performance Characteristics

RFID engine:	TSL custom module with embedded Impinj E710.
Communication protocols:	TSL ASCII 3 parameterised command set.
Security features:	HID OMNIKEY® Security Chip
Memory:	Embedded 32GB[5] storage memory - store up to 500 million date and time stamped EPCs
Compatible host devices (*Bluetooth*®):	Any *Bluetooth*® Host[6] supporting the Serial Port Profile (SPP), Human Interface Device (HID), BLE with HOG (HID over GATT) or BLE with SOG (Serial over GATT). See Bluetooth Mode Comparison.
Compatible host devices (USB):	Any USB host with USB CDC support (Windows, Linux, Mac, Android).

Environmental

Operating temp.:	-10°C to 50°C (14°F to 122°F).
Charging temp.:	5°C to 40°C (41°F to 104°F).
Storage temp.:	Less than 1 month at -20°C to +45°C (-4°F to 113°F). Less than 6 months at -20°C to +35°C (-4°F to 95°F).
Humidity:	5% to 85% non-condensing.
Drop spec:	Multiple drops to concrete: 4 ft./1.2 m ambient, 3ft / 0.9m across the operating temperature range.
Tumble:	1000 0.5 metre tumbles at room temperature (2000 cycles).
Electrostatic Discharge (ESD):	± 15kVdc air discharge; ± 8kVdc contact discharge.
MIL-STD 810F:	Meets and exceeds applicable MIL-STD 810F for drop, tumble and sealing.

RFID Performance

Standards supported:	EPC Class 1 Gen 2 v2
Nominal read range[7]:	Up to 9 m (29.5 ft).
Nominal write range[7]:	Up to 4 m (13.1 ft).
Field:	150-degree forward facing (approx.)
Antenna:	Right Hand Circularly Polarised with optional 2D scanner.
Frequency Range:	EU: 865-868MHz, 916-919MHz US: 902-928MHz
Maximum Output Power:	Up to 30 dBm (region dependent) + 4.0 dBiC Antenna.

Barcode Scanning

Optional 2D barcode engine:	Optional TSL custom 2D Barcode Scan Engine module.
Sensor resolution:	1280 x 960 pixels, rolling shutter
Field of view:	Horizontal: 44.5°, vertical: 33.5°
Focal distance:	From front of engine: 15.24 cm (6 in.)
Aiming LED:	Green LED
Illumination:	1 warm white LED
Symbologies supported:	1D: All major codes 2D: PDF417, MicroPDF417, Composite, RSS, TLC-39, Datamatrix, QR code, Micro QR code, Aztec, MaxiCode Postal Codes: US PostNet, US Planet, UK Postal, Australian Postal, Japan Postal, Dutch Postal (KIX).

Ranges[8]:

Barcode	Near	Far
5 mil Code 39	6.1 cm	24.1 cm
5 mil Code 128	7.1 cm	22.9 cm
6.67 mil PDF 417	6.1 cm	20.3 cm
10 mil DataMatrix	7.4 cm	21.6 cm
100% UPCA	4.6 cm	49.5 cm
15 mil QR	3.0 cm	29.2 cm
20 mil QR	3.0 cm	35.6 cm

Communication

Bluetooth®:	*Bluetooth*® v4.2 compliant (v5.1 compatible)
Bluetooth GATT Services:	• Device Information Service • Battery Service • HID over GATT • Serial over GATT (TSL)
Bluetooth frequency range:	2.4 - 2.4835 GHz.
Bluetooth profiles:	SPP Profile, HID Profile, Apple iAP2, Bluetooth Low Energy.
Bluetooth range[9]:	Up to 100m.
Bluetooth pairing:	Simple Secure Pairing, NFC OOB Pairing.
Physical host device connection	Direct connection via ePop-Loq® cases (separate purchase).

Peripherals and Accessories

[1] Minimum operating time figures are based on new units that have been stored, charged and operated within the stated Environmental Specifications. Units stored over 3 months must be recharged every 3 months. Number of transponders in the environment affects minimum operating time.

[2] Light Use: Continuous RFID inventories for 20s of every 120s

[3] Moderate Use: Continuous RFID inventories for 10s of every 30s

[4] Heavy Use: Continuous RFID inventories for 59s of every 60s

[5] Up to 256GB microSD card storage supported. 32GB fitted as standard

[6] Compatible *Bluetooth*® stack required in the Host device

[7] Tag Read/Write performance is dependent on tag type, items tagged, number of tags in the field and other radio and environmental factors

[8] Artificial lighting can affect scanning performance

[9] Open field

(These technical specifications are taken from the 3138 Datasheet v1.12 - 7th November 2025)

POWER HANDLE INSTALLATION OR REMOVAL

A high capacity battery is contained within the Power Handle. The Power Handle can be charged using a USB-C lead (USB-C models only) or in a charging cradle (Power-Pin models only). To remove or replace the Power Handle, please follow the steps below.

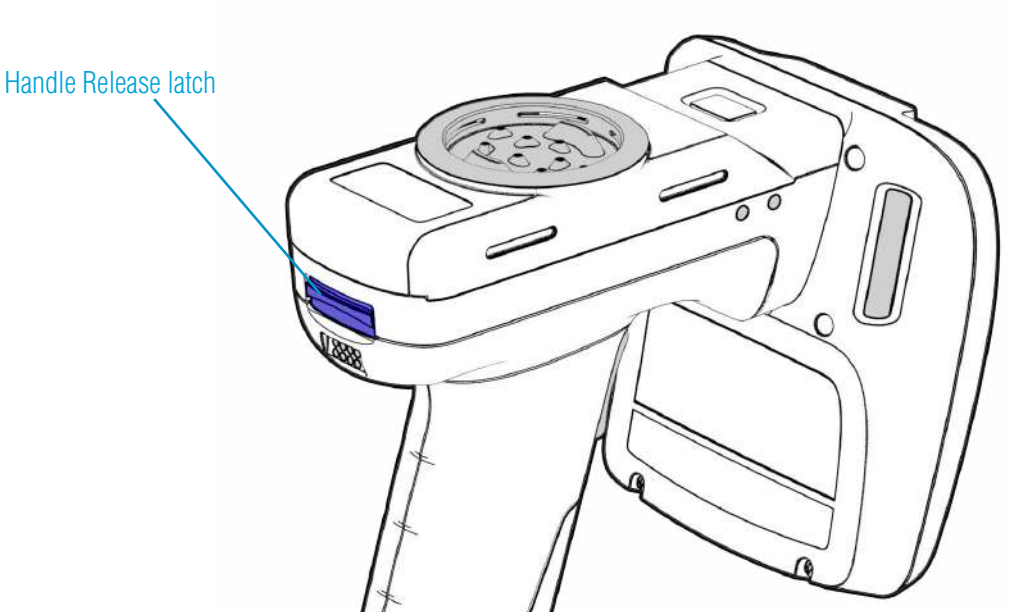

Figure 4: Location of Handle Release latch

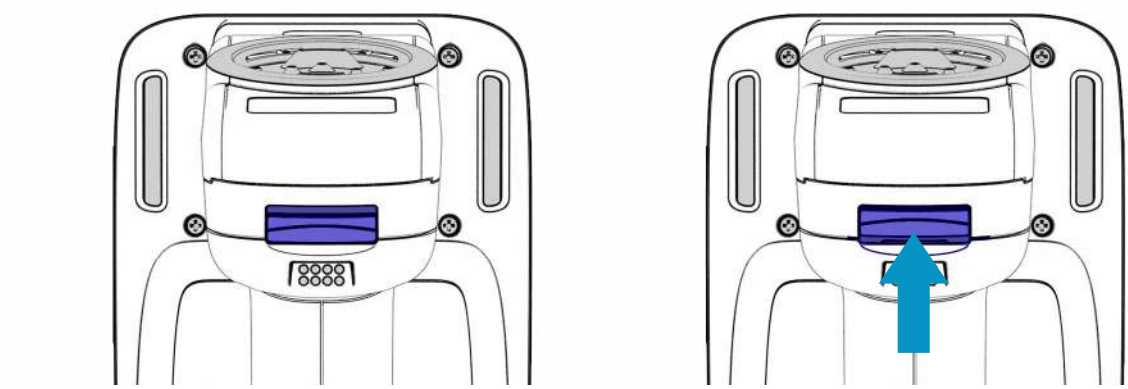

Figure 5: Handle Release latch operation

Push the Handle Release latch in the direction indicated by the arrow (See “Figure 5: Handle Release latch operation”). At the same time, gently slide the Power Handle in the direction indicated (See “Figure 6: Slide Power Handle off”).

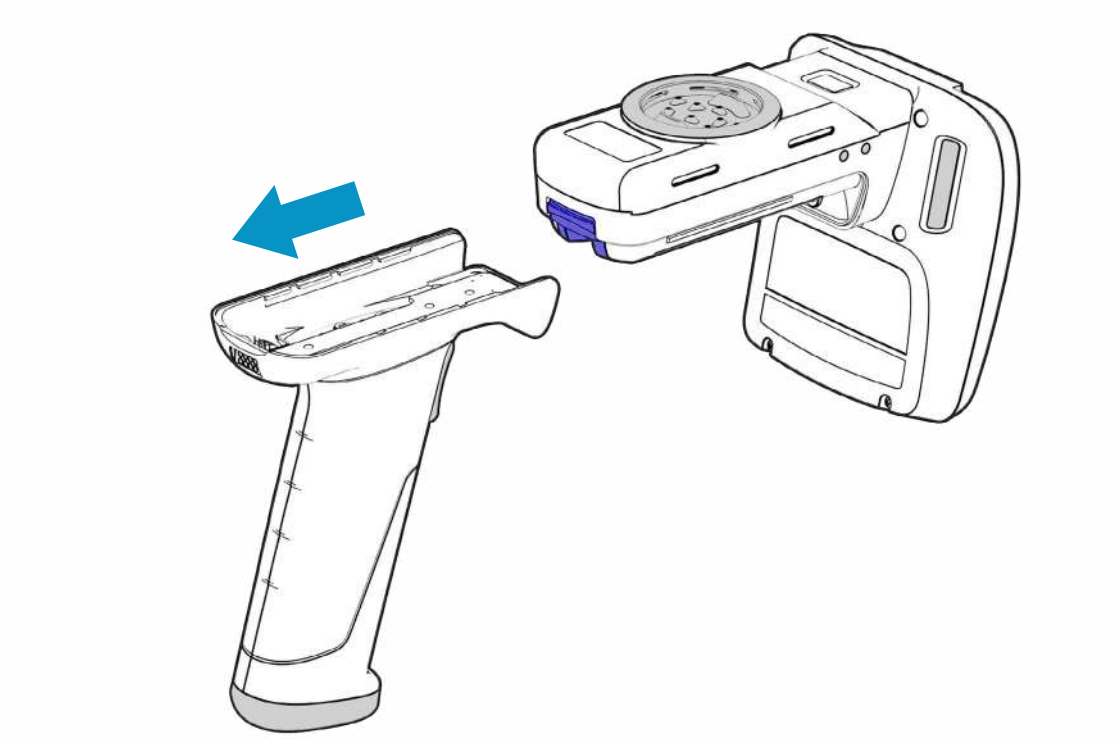

Figure 6: Slide Power Handle off

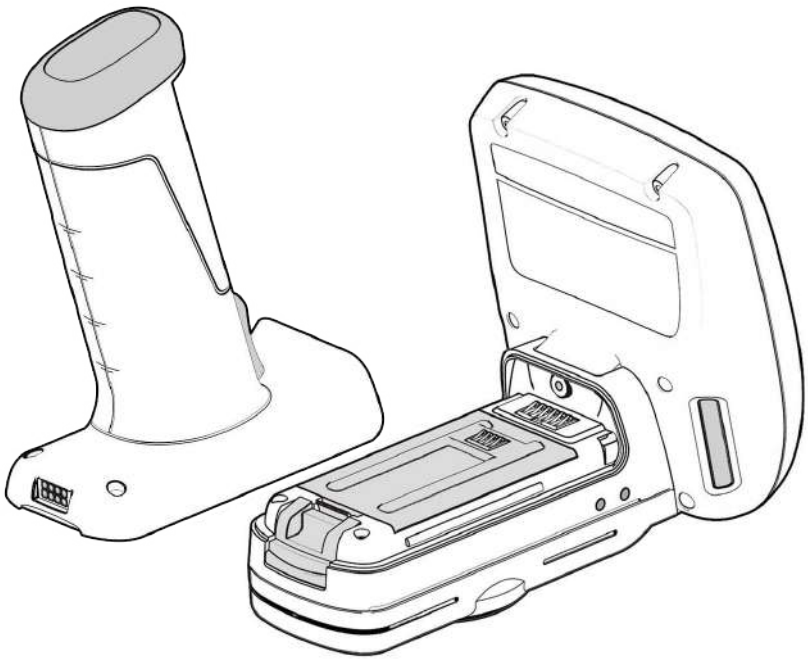

Figure 7: Power Handle removed

The actions to replace the Power Handle are:

- Slide the Power Handle back onto the main unit, making sure that the guide rails are properly aligned
- The release latch will audibly 'click' to indicate the Power Handle is fixed in place

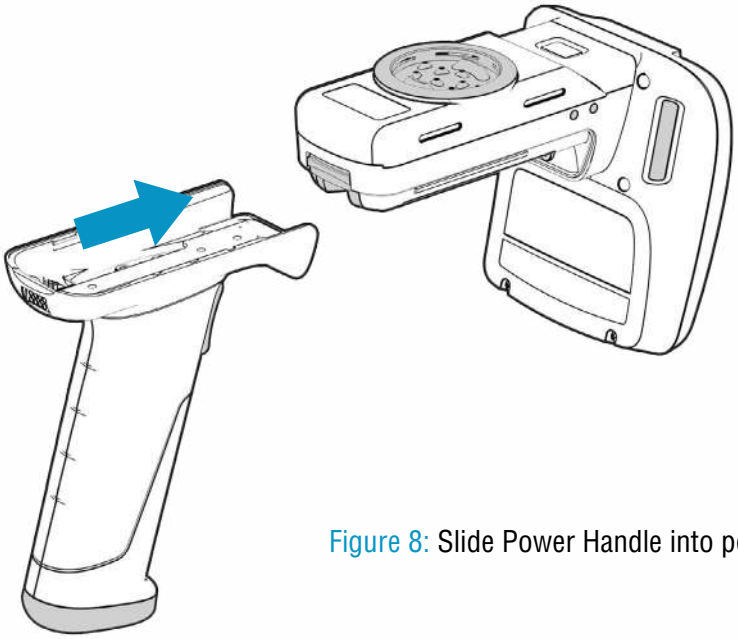

Figure 8: Slide Power Handle into position

INSERTING OR REMOVING A MICRO SD CARD

An optional micro SD card can be installed inside the 3138 reader. The card should be SD/SDHC compatible, FAT16 or FAT32 up to 256 GB.

To remove the Power Bridge/access the micro SD card slot

1. Remove the Power Handle (see "Power Handle Installation or Removal" on page 7)
2. Press on the Release Tab to lift the Power Bridge out of the main body of the reader (see "Figure 9: Remove Power Bridge")
3. The micro SD card slot will now be visible

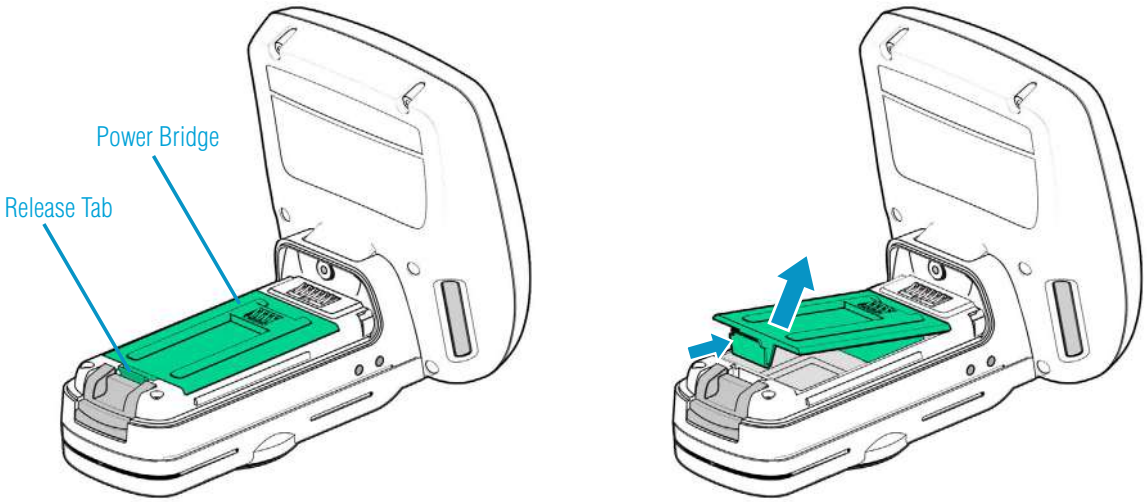

Figure 9: Remove Power Bridge

To insert or remove a micro SD card

The card slot is spring loaded. After aligning the card with the slot, push and release the card once to lock the card into the holder. Once locked in a further push and release will eject the card. It can then be removed from the slot.

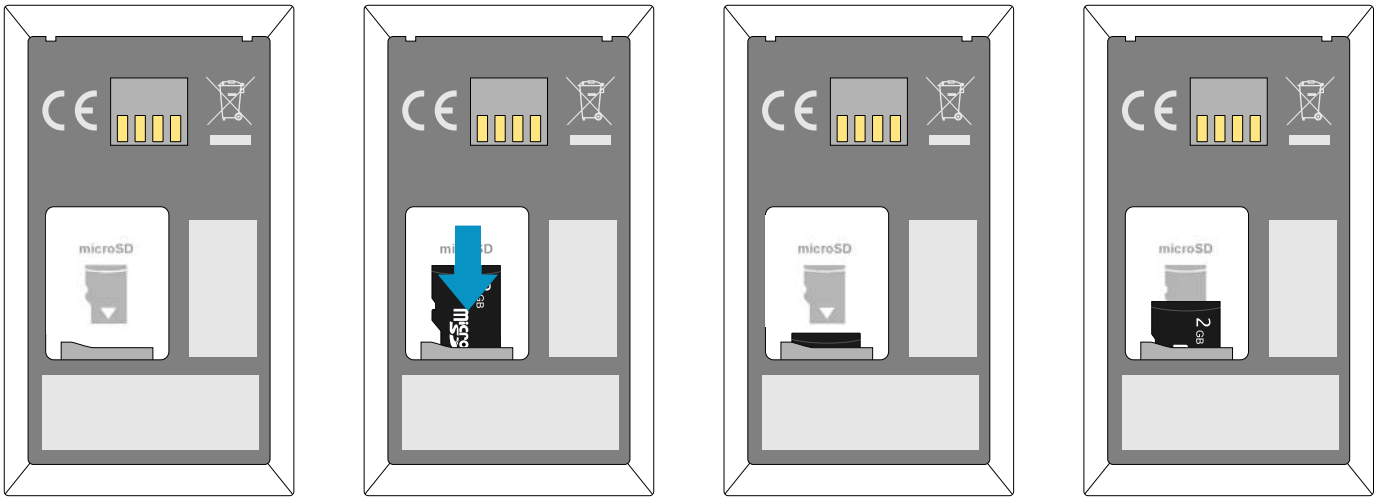

Figure 10: Micro SD Card Insertion and Removal

To replace the Power Bridge

- Align the Power Bridge using the indents with the pips on the case
- Carefully push the Power Bridge down into position, until the Release Tab clicks into place
- Check that the Power Bridge is sitting correctly in position before attaching a Power Handle

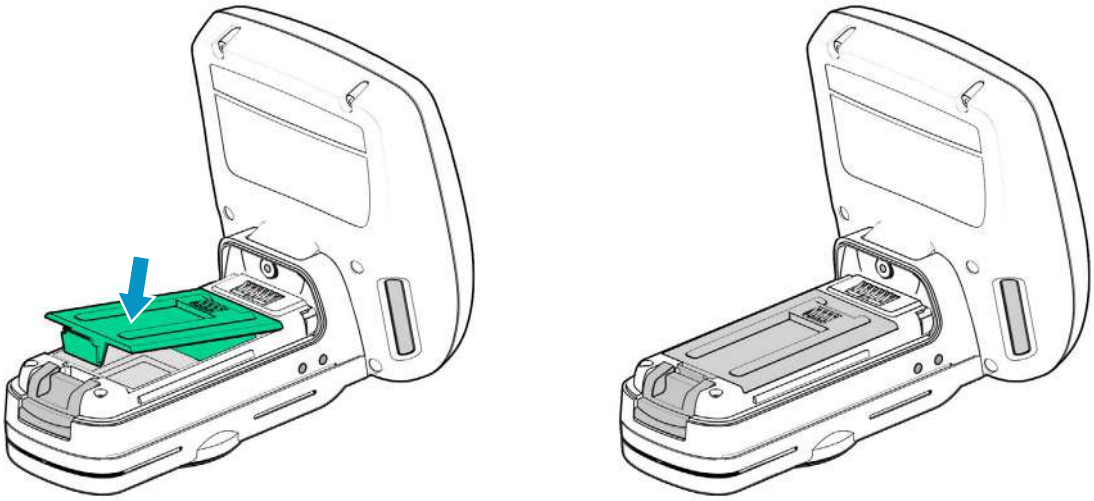

Figure 11: Replace Power Bridge

ATTACHING DEVICES VIA THE EPOP-LOQ® SOCKET

Custom ePop-Loq® cases from TSL allow smartphones and mobile terminals to be physically attached to the 3138 Bluetooth UHF RFID Reader and share direct electrical connections between the two devices.

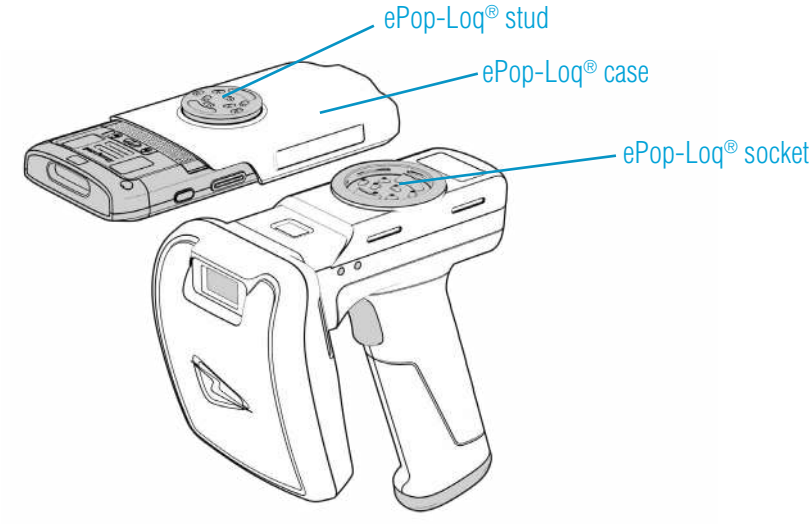

Figure 12: ePop-Loq® component parts

TO FIT A DEVICE WITH AN EPOP-LOQ® CASE TO A TSL READER:

1. Ensure the smartphone / mobile terminal is fitted into its ePop-Loq® case ***before*** attaching the case to the 3138 UHF RFID Reader. This prevents over-flexing of the case.
2. Make sure all of the contacts - on both the ePop-Loq® socket and stud - are clean and free from dirt or debris.
3. Align the ePop-Loq® stud with the ePop-Loq® socket - ensuring that the front of the host device is pointing towards the antenna - and press the two parts together until they click into place.
4. To remove the ePop-Loq® case, pull in the opposite direction. Do not twist the devices when separating.

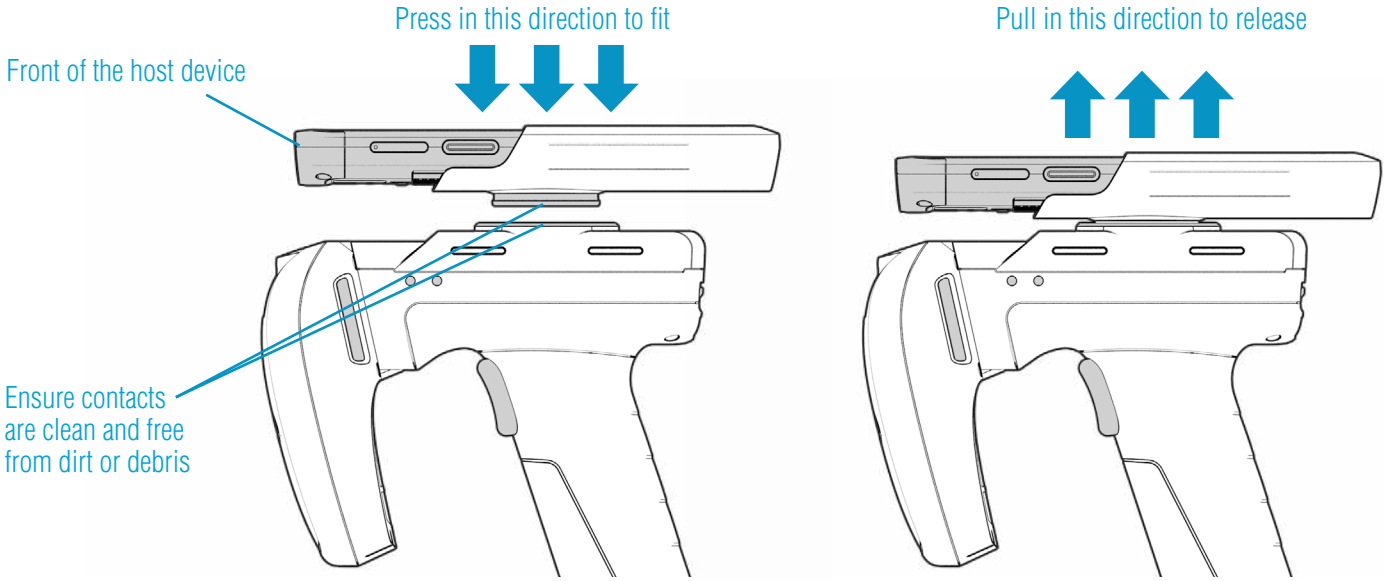

Figure 13: Attaching/Detaching an ePop-Loq® case

CHARGING

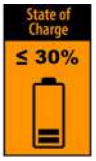

To comply with international shipping regulations, **all batteries included with TSL products are discharged to less than 30% of their maximum capacity when shipped**. It is therefore important that the unit is fully charged before using your 3138 UHF Reader for the first time. Please note that the Power Handle will take 2-3 charge cycles to reach full capacity.

The USB variants of the 3138 UHF Reader are supplied with a USB-C lead for charging and synchronisation. A USB power supply can be used for independent charging of the Reader (order **USBC-PSU-KIT45** - 45W USB-C PSU with Power Delivery). The USB-C connector is inserted into the 3138 UHF Reader as shown below.

If using a USB power supply, it should be connected to an accessible power outlet to permit easy disconnection if required.

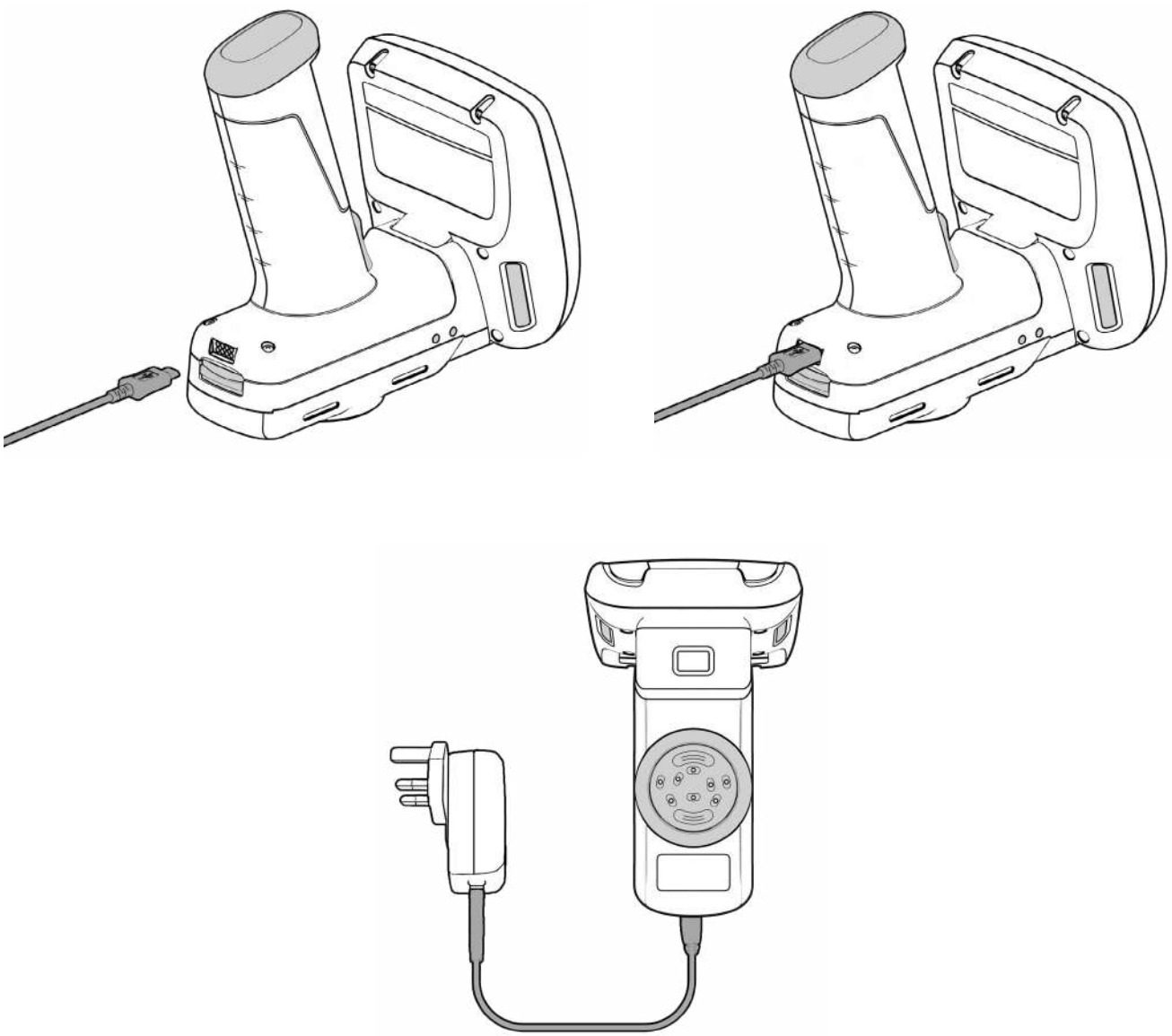

Figure 14: Attaching the USB-C cable

DOCKING CRADLE COMPATIBILITY

If the 3138 UHF Reader is fitted with the optional accessory **31PH-02** (Power Handle with 8-way Power Pins), the Reader can be charged using a Docking Cradle.

The 3138 Docking Cradle has a USB-C connector that can be used for either charging or data communications.

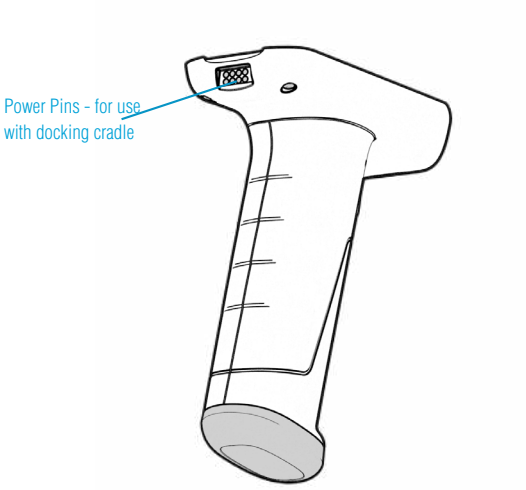

Figure 15: 31PH-02 Power Handle with 8-way Power Pins (optional extra)

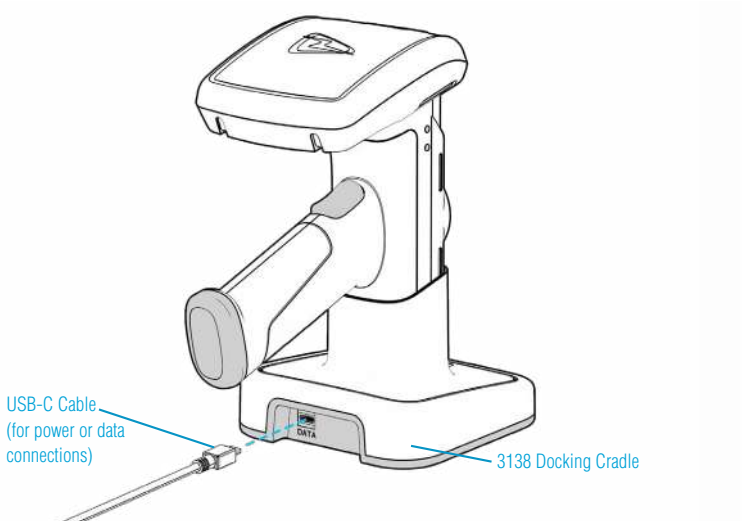

Figure 16: Charging the 3138 UHF Reader

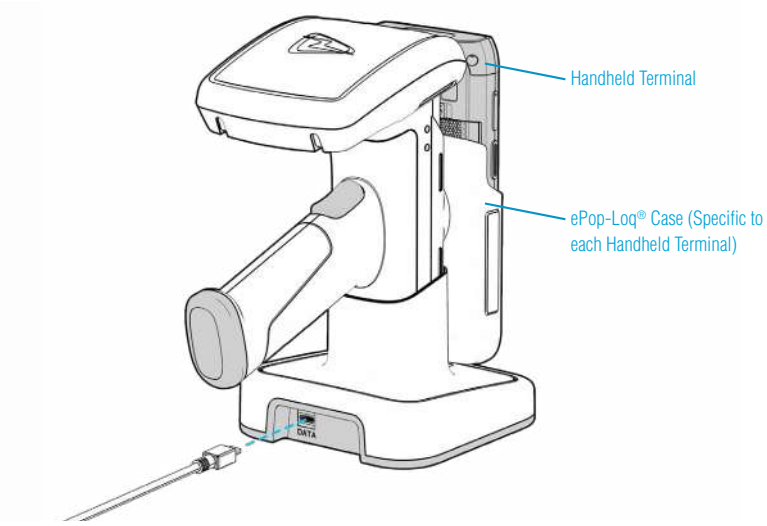

Figure 17: Charging the 3138 UHF Reader and Handheld Terminal

BUTTON OPERATION

The 3138 UHF Reader has a Primary button action and a Secondary button action which can be initiated by different button clicks: By default, the Primary action scans for UHF transponders, whilst the Secondary action initiates the barcode scanner (Barcode scanning is only available with the 2D Imager Antenna variant). Which operation is performed depends on the way in which the button is pressed. The Single and Double press button actions are also programmable.

PRIMARY BUTTON (CLICK AND HOLD)

- UHF Transponder Read

The primary button click is a standard button action:

- To initiate a primary button click press and hold the trigger button.
- To terminate a primary button click release the trigger button.

In the default configuration the 3138 UHF Reader scans for UHF transponders as the primary function. The 3138 UHF Reader will continue to scan for UHF transponders while the button is pressed. It will stop scanning once the button is released (and the current operation completes).

SECONDARY BUTTON (DOUBLE CLICK AND HOLD)

– Barcode Scan (2D Imager Antenna only)

The secondary button click is a single click quickly followed by a second press (press-release-press).

- To initiate a secondary button click press then release then press and hold the trigger button.
- To terminate a secondary button click release the trigger button.

In the default configuration the 3138 UHF Reader scans for barcodes as the secondary function. The 3138 UHF Reader will continue to scan for a barcode while the button is pressed. It will stop scanning when any of the following conditions are met:

- A barcode is scanned.
- The button is released.
- The barcode engine times out.

CONTROLLING THE TRIGGER BUTTON THROUGH ASCII COMMANDS

The trigger button's mode can also be changed to stop/start using ASCII commands. Refer to the .pd and .ps commands detailed within the ASCII Protocol PDF, which can be downloaded from the *3138 Downloads page*.

READING TRANSPONDERS

The 3138 UHF Reader can read and write to UHF RFID transponders when they are in range of the antenna. The antenna is located on the front of the 3138 UHF Reader and the read zone is in front of the antenna.
The range at which a transponder can be read depends on the transponder type and size, and the number of transponders in the field.

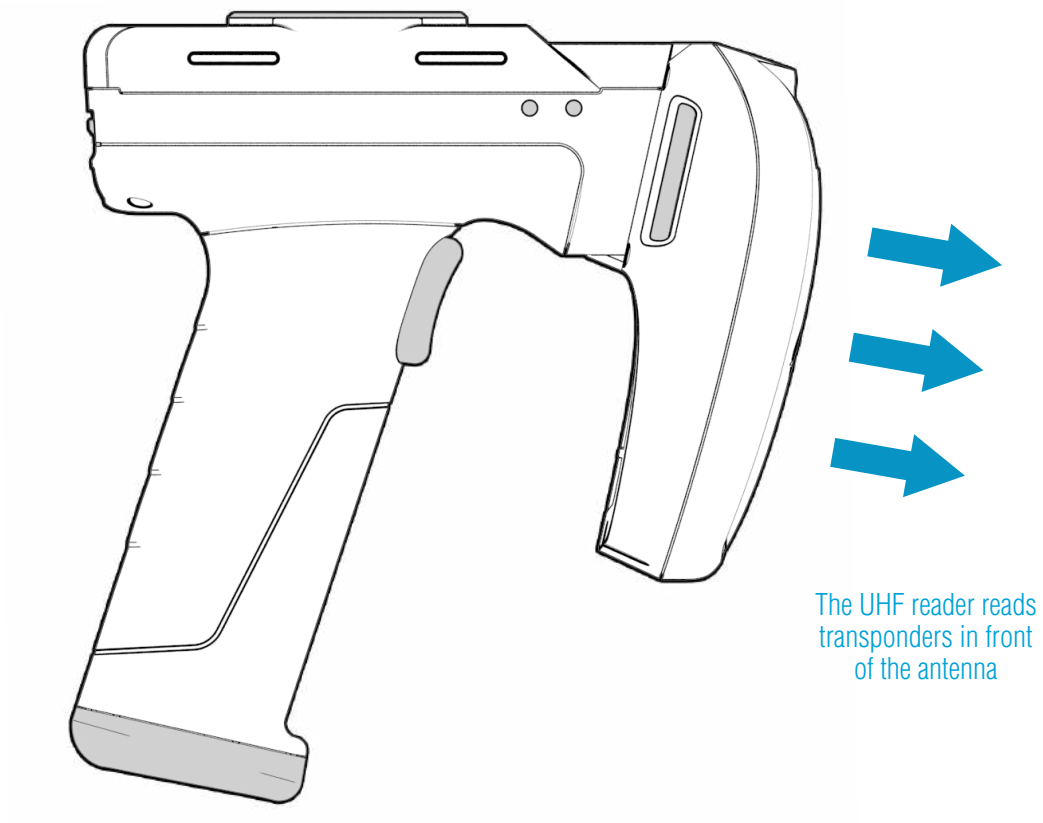

Figure 18: Antenna location and read direction

STATUS LEDS

Location of Main Body Status Indicators

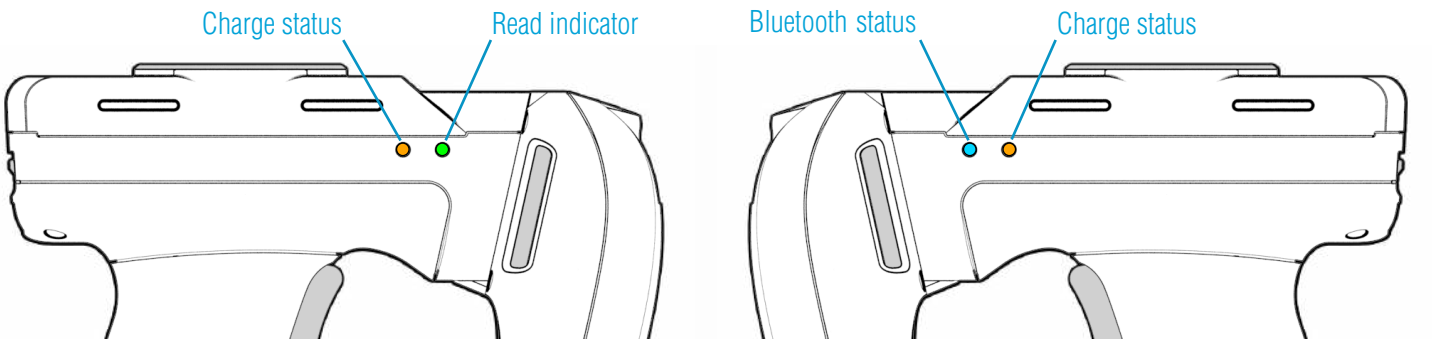

Figure 19: Location of status LEDs on the main body of the 3138 UHF Reader

Default Behaviour of the Main Body Status LEDs

LED Behaviour	Status
Blue slow flash (50% on, 50% off).	The reader is awake but there is no connection.
Blue constant.	The reader is awake and connected to a host.
Short green flash.	The reader has successfully read a tag or barcode or executed the alert command.
Green slow flash (50% on, 50% off).	Antenna error.
Orange slow flash (50% on, 50% off).	Battery low warning (<10% capacity remaining)- recharge immediately.
Orange short single slow flash.	Battery charging with battery level less than 33%.
Orange short double flash.	Battery charging with battery level less than or equal to 66%.
Orange short triple flash.	Battery charging with battery level greater than 66%.
Orange rapid flash.	There is a charge error / battery fault.
Orange constant.	The reader is fully charged.
All off.	The reader is off and not charging.

Copyright © 2025 Technology Solutions (UK) Ltd

Location of Antenna Indicators

The Antenna Indicators provide additional information to the user whilst the 3138 Reader is being operated.

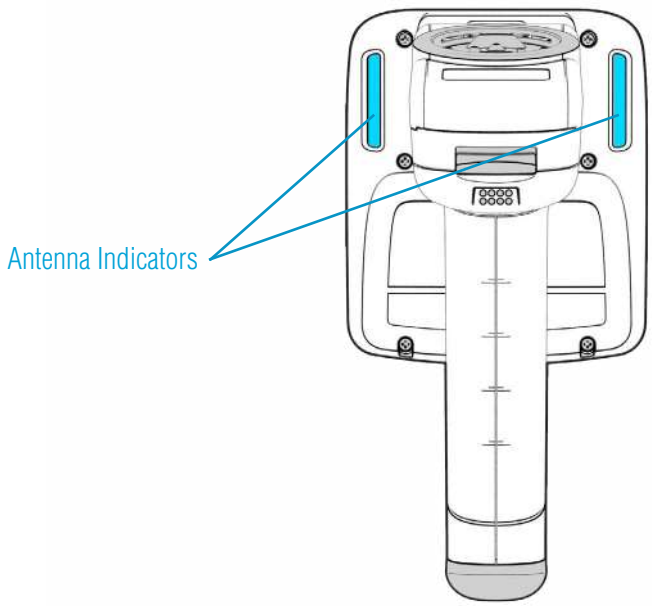

Figure 20: Location of Antenna Indicators

Default Behaviour of the Antenna Indicators

Reader has woken

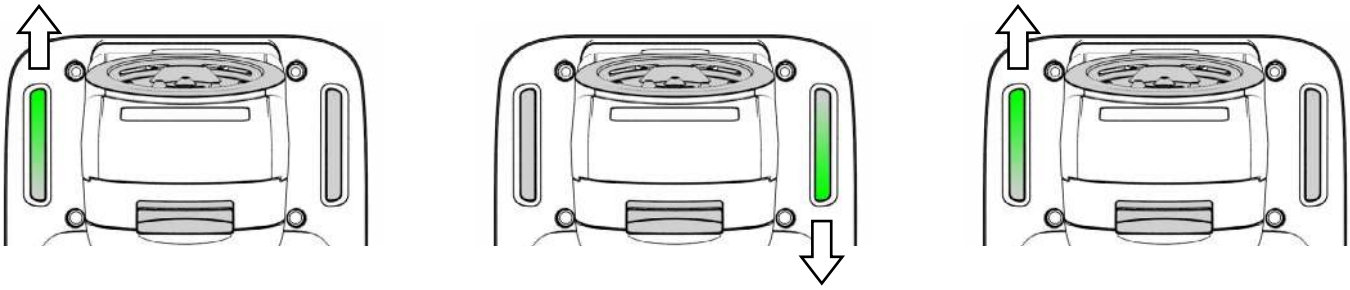

Indicators light up green one by one in a clockwise direction.

Reader is powering off

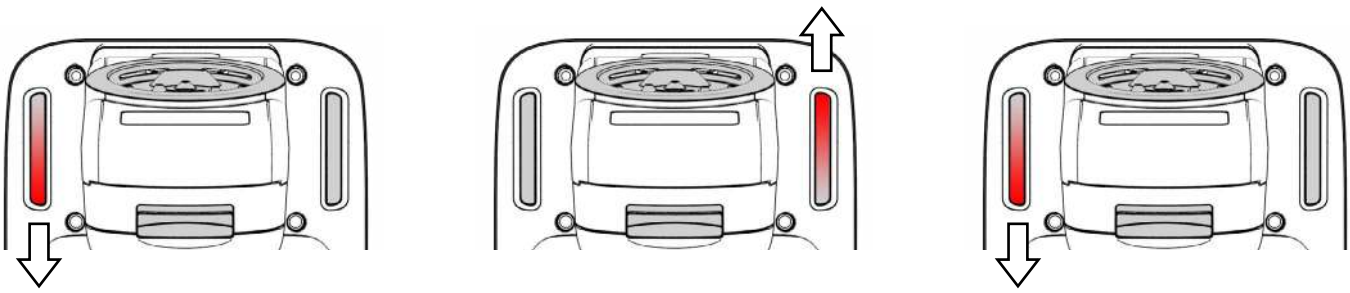

Indicators light up red one by one in an anti-clockwise direction.

Battery Low

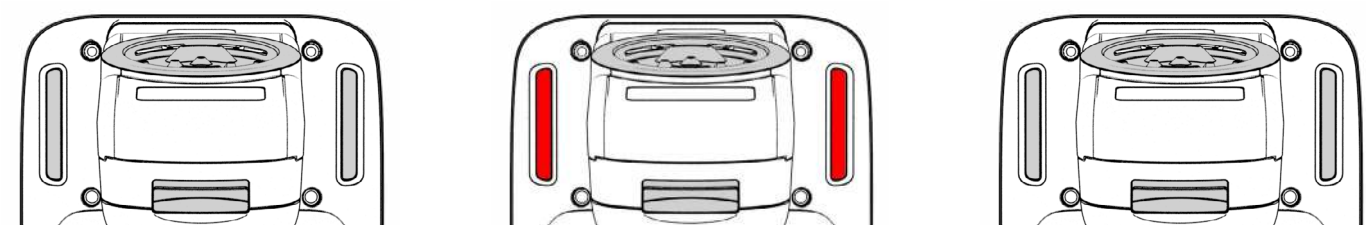

A quick red flash when powering on the reader or just before a tag or barcode read indicates that the battery is low and should be charged.

Bluetooth Connected

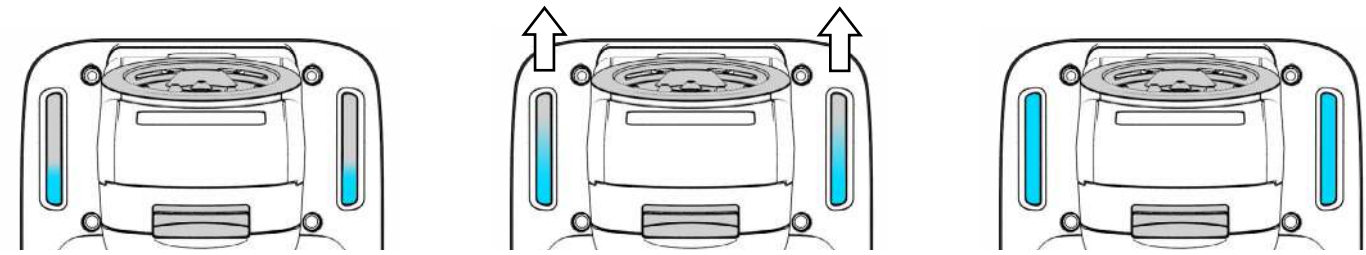

Indicators light up blue from bottom to top.

Bluetooth Disconnected

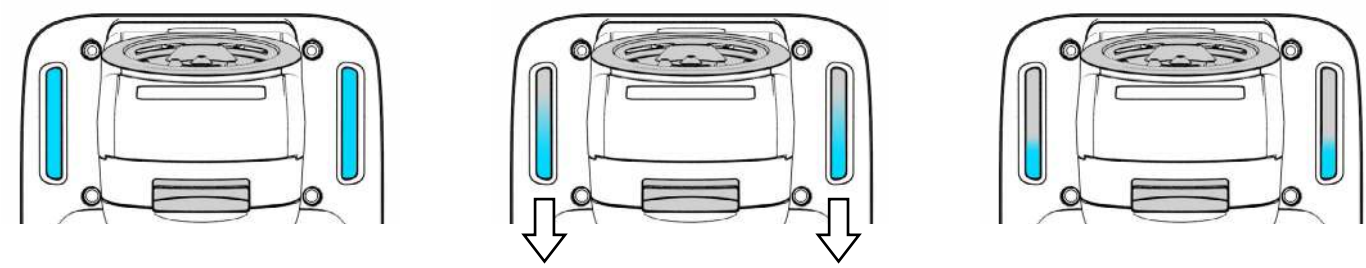

Indicators light up blue from top to bottom, pausing at the bottom.

RFID Information Received - No New Tags Found

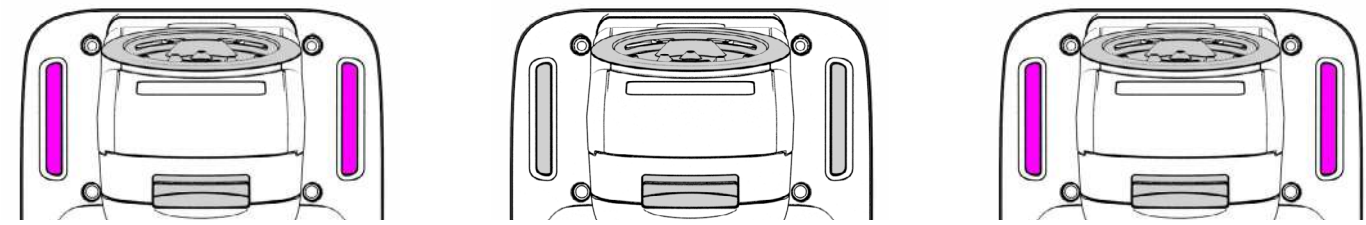

Indicators flash magenta.

Copyright © 2025 Technology Solutions (UK) Ltd

RFID Information Received - New Tags Found

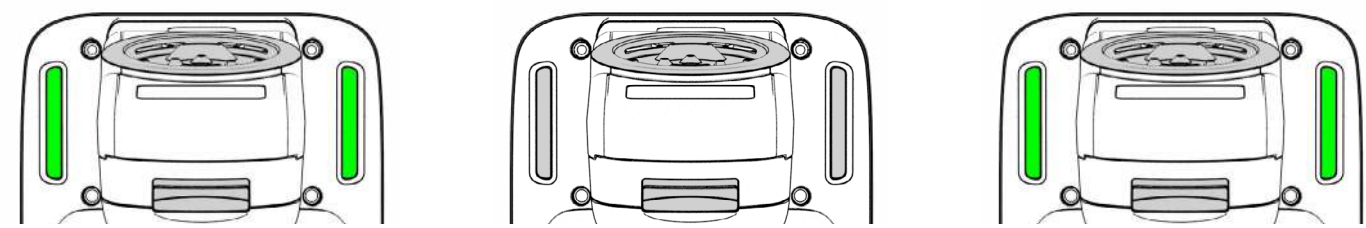

Indicators flash green.

Barcode Information Received

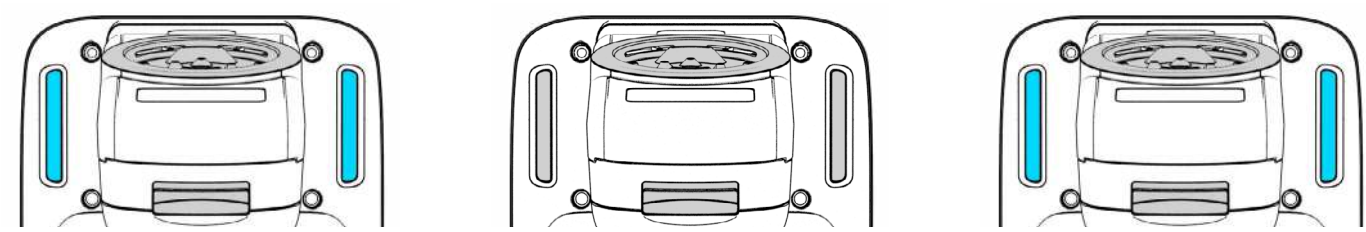

Indicators flash cyan.

‘Find Me’ Alert (requires compatible app)

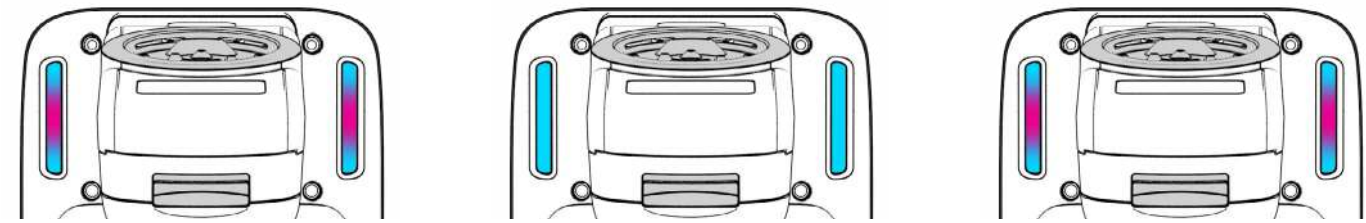

Indicators flash magenta and cyan. This alert is available in the latest SDK and can be implemented to help the user locate the (Bluetooth-connected) 3138 Reader.

‘Find a Tag’ Function (requires compatible app)

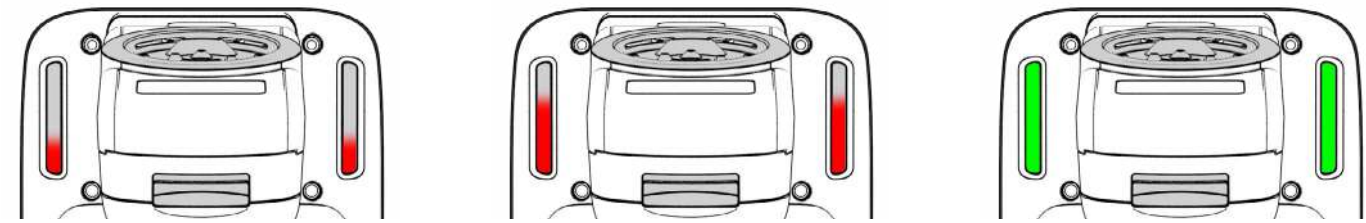

near nearer very near

This feature is available in the latest SDK and can be implemented to help the user locate a specific RFID tag.

Charge Status (when charging in the Docking Cradle)

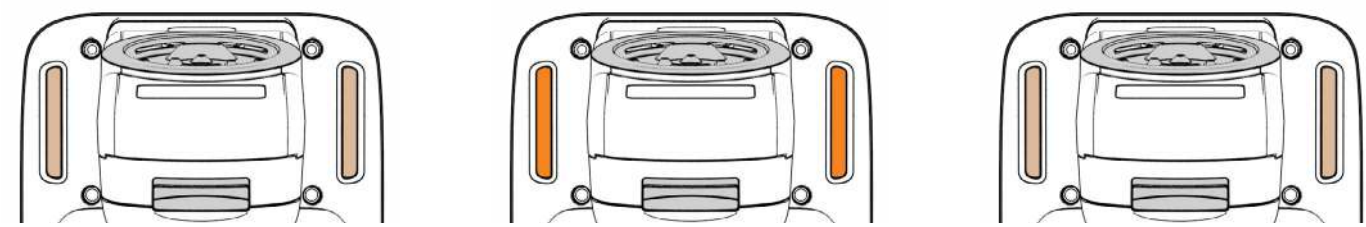

Pulsing Orange: Charging (0-75%)

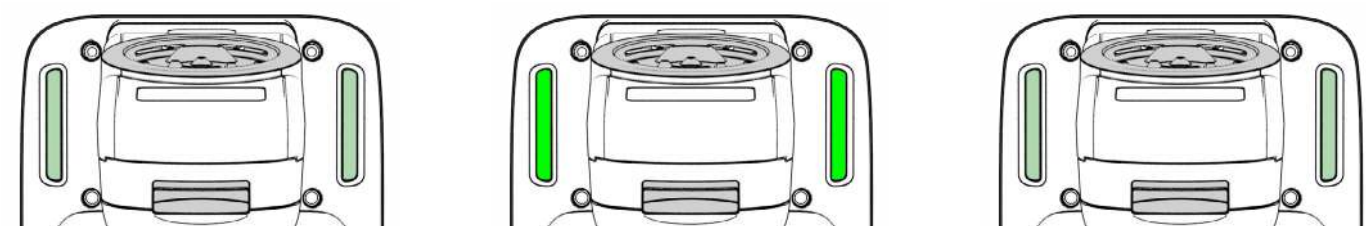

Pulsing Green: Charging (75-100%)

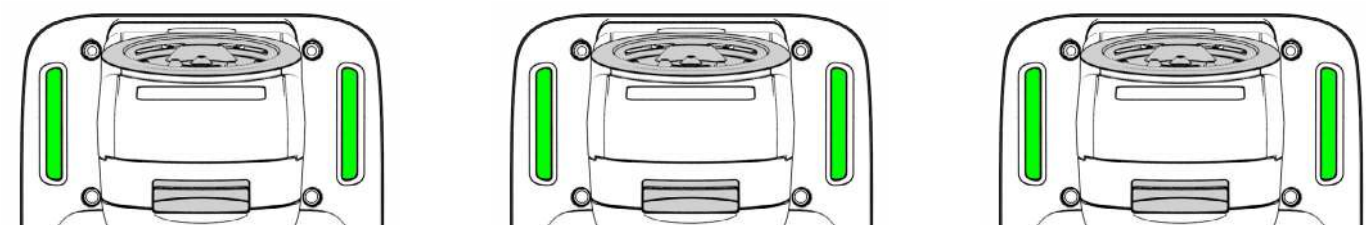

Solid Green: Fully Charged

CONNECTIONS

The connection to the 3138 is either via Bluetooth or USB. Bluetooth connections use either a Virtual Com Port (VCP) or via the iAP protocol for supported Apple iOS Devices. The USB port is USB CDC connection - this will still appear as a serial device on a PC.

USB CONNECTION

THE EPOP-LOQ® INTERFACE

The 3138 UHF RFID Reader has an ePop-Loq® connector, which can provide USB Charge and Data connections between the Reader and host device via custom 'ePop-Loq Mounts'. Developers can create applications that communicate with the Reader via USB instead of Bluetooth.

- USB connection will be passed through ePop-Loq® to the attached device (via a custom ePop-Loq® case).
- Note that USB data connection to the 3138 requires a custom application that supports the TSL ASCII Protocol over USB.
- If the Reader is placed into the charge cradle whilst a device is attached to the ePop-Loq®, the USB data connection between Reader and host device is disconnected, and both the 3138 and the attached device will charge.

N.B. The USB connector on the charging cradle is always available when the 3138 is docked.

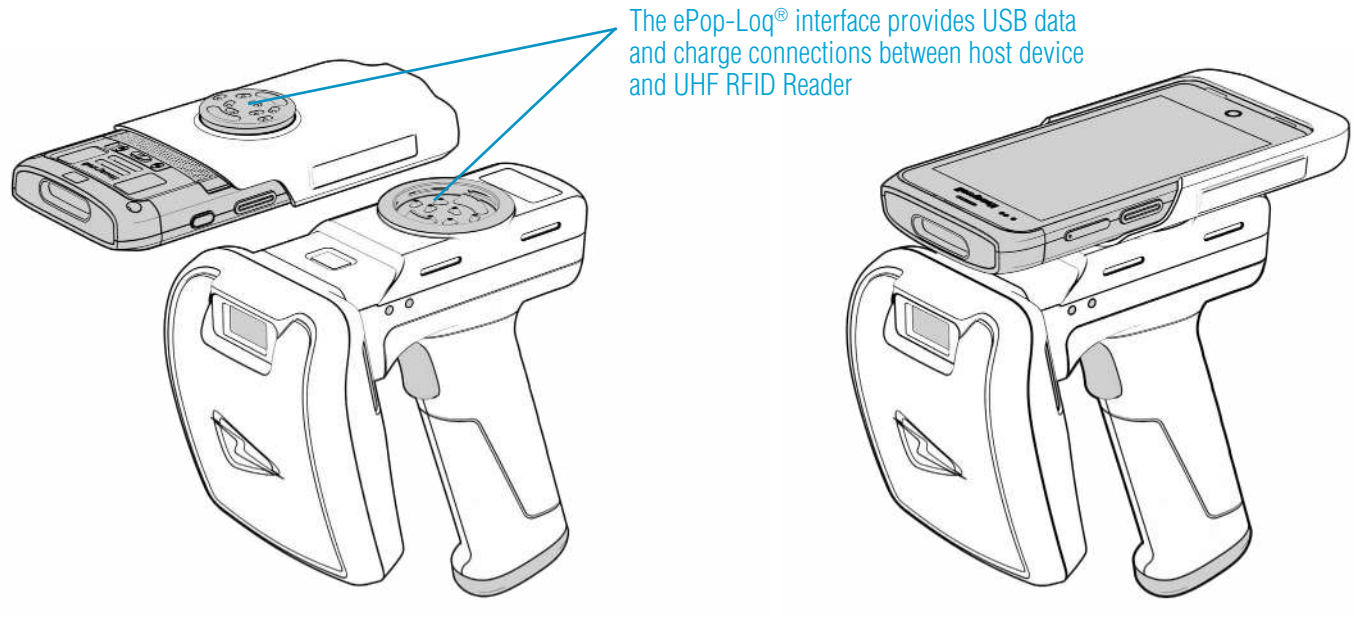

Figure 21: The ePop-Loq® system

BLUETOOTH WIRELESS TECHNOLOGY CONNECTION

COMPATIBLE PRODUCTS

The 3138 Bluetooth Handheld UHF RFID Reader is compatible with many Bluetooth wireless technology enabled host devices including Android and Windows devices.

COMPARISON OF BLUETOOTH OPERATING MODES

TSL 31xx readers support four modes of operation over Bluetooth. When connected via USB the 3138 reader uses the TSL ASCII 3 protocol (which is backwardly compatible with ASCII 2), but when connected over Bluetooth the reader can either be set to use the TSL ASCII 3 protocol (Bluetooth SPP/SOG Mode) or it can appear as a Bluetooth keyboard (Bluetooth HID/HOG Mode).

The comparison chart below highlights the differences between serial and HID operating modes:

Serial Modes • Bluetooth SPP (Serial Port Profile) • Bluetooth Low Energy SOG (Serial over GATT)	**HID Modes** • Bluetooth HID (Human Interface Device) • Bluetooth Low Energy HOG (HID over GATT)
Apps need to be written with specific support for the Reader	Apps can use the Reader without modification
The Reader can be discovered and paired in the Bluetooth Settings or from within the App but the App controls the connection ● Connects when instructed by the App ● Disconnects when instructed by the App ● The reader powers off when no longer connected and idle ● The App needs to connect to restore	Reader is discovered and paired in the Host Bluetooth Settings (often appears as a Keyboard) ● After pairing the reader connects automatically ● If idle the reader sleeps and the connection is dropped ● The reader, when woken, automatically reconnects to the host device
Apps receive and interpret ASCII Protocol responses when the user triggers a UHF or barcode scan	Apps receive input as Key strokes from the reader including Tab and Return/Enter keys
The App can respond and react intelligently to responses e.g. ● duplicate responses can be ignored or counted ● incoming tag data can be truncated, stripped or transformed into alternative representations: Hex, ASCII, GS1 EPC URI, etc…	The reader types text for each barcode/UHF scan received ● The tag values can be returned in Hex or ASCII representations ● Extra text may be included in the data returned ● The reader can trim tag/barcode data
The App can change the Reader's behaviour	The Reader can only send scanned data to the host, the host cannot change the reader's behaviour
The Reader's behaviour and command parameters are controlled in real time by the App e.g. the trigger action can change to suit the task that the User is performing; the App can allow the User to specify Inventory output power	The Reader's behaviour, such as the action of the reader's trigger switch, the inventory output power, the idle sleep timeout and other command parameters can be configured only once at start-up.
Configuration is held within the App (any configuration in the AUTO.TXT is likely to be overridden by the App settings)	All configuration is held in an AUTO.TXT file stored on the (optional) SD card. Removing the SD card or deleting the AUTO.TXT and power-cycling the unit restores default settings.
All reader activity, by default, is saved to a log file if an SD-Card is fitted.	All reader activity, by default, is saved to a log file if an SD-card is fitted.

Copyright © 2025 Technology Solutions (UK) Ltd

CHANGING THE BLUETOOTH OPERATING MODE

TSL Bluetooth UHF RFID Readers can be operated in *SPP mode* where the Reader is controlled by a custom-written application or in *HID mode*, where the Reader behaves like a Bluetooth Keyboard.

The HID mode has two variants[i] :

1. *HID mode* — Compatible with Android, Windows and supported Apple iOS Devices
2. *HID Apple mode* — Compatible only with supported Apple iOS Devices, providing an on-screen keyboard toggle

If the 3138 Reader is equipped with a 2D imager, you change modes simply by scanning a special barcode - see "Changing the Bluetooth Operating Mode Using Command Scan" on page 25. If no 2D imager is available then follow the steps detailed below.

Preparation:

Download and install "TSL PC Firmware Downloader" from the Reader product download page (free, one time, registration required): *www.tsl.com/3138-downloads*

To switch to Bluetooth HID mode:

- First delete existing pairings to the UHF reader
- Launch the Firmware Downloader (*Desktop Firmware Loader*)
- Connect the UHF reader to the computer using the supplied USB cable. The driver should install automatically*
- The downloader should prompt as the com port arrives and select the com port automatically ("`COMn arrived`")
- Select **Action>Reset Bluetooth to HID mode** or **Action>Reset Bluetooth to HID Apple mode** (wait for the process to complete)
- Disconnect the UHF reader from the computer (unplug USB)
- Wake the UHF reader (pull trigger, blue flashing LED)
- Pair to the reader on the device (it typically appears as a keyboard icon and connects automatically)
- Scanned data should now be typed into the current application on the device

To switch to Bluetooth SPP mode:

- First delete existing pairings to the UHF reader
- Launch the downloader (*Desktop Firmware Loader*)
- Connect the UHF reader to the computer using the supplied USB cable. The driver should install automatically*
- The downloader should prompt as the com port arrives and select the com port automatically ("`COMn arrived`")
- Select **Action>Reset Bluetooth to SPP mode** (wait for the process to complete)
- Disconnect the UHF reader from the computer (unplug USB)
- Wake the UHF reader (pull trigger, blue flashing LED)
- Pair to the reader on the device
- Launch an Application (e.g. *RFID Explorer*) to use the reader

* if not, download from here: *https://ftdichip.com/drivers/vcp-drivers*

FURTHER INFORMATION

Further information can be found from the Reader Download pages (free, one-time, registration required - see links above)

Application Note – Bluetooth HID mode: Provides further examples for configuring HID mode
Application Note – Using the Micro SD log and auto-run files: Describes using the AUTO.TXT
TSL ASCII Protocol 2.5 Rev A: Details all the commands including for HID .st,.hs,.hc, and .hd

If you encounter any issue while following the above procedure please contact *support@tsl.com* providing the following information:

- The serial number of the UHF Reader
- The Firmware version of the UHF Reader
- The step at which the procedure failed
- A description of the fault that occurred

---

[i]Firmware requirements: 1128 - v4.2.7 or greater; 1153 – v2.1.7 or greater; 1166 – v1.1.6 or greater

CHANGING THE BLUETOOTH OPERATING MODE USING COMMAND SCAN

3138 UHF RFID Readers equipped with a 2D Barcode Imager can scan special 'Command Scan' barcodes to change the Readers' parameters, including switching the Bluetooth Operating Mode. Simply scan one of the 2D barcodes below to switch mode.

WARNING - Scanning one of the 2D barcodes below with a TSL 3xxx Reader (such as the 3138) changes the operating parameters of the Reader. This is a persistent change (i.e. change will remain after removing the Power Handle to reset the Reader). The Bluetooth Mode can be changed back by scanning the other barcode.

SWITCH TO HID MODE

auto://tsl.com/.bt -m hid .al -fm

SWITCH TO SPP MODE

auto://tsl.com/.bt -m spp .al -fm

Further Information

See "Command Scan" on page 33

SETTING UP A BLUETOOTH CONNECTION WITH AN APPLE iOS DEVICE

Awaken the 3138 UHF Reader by squeezing the trigger, which is confirmed by the flashing of the blue LED. To pair with your iOS device, navigate to the Bluetooth option within the Settings menu on your iOS device.

VIEW LIST OF BLUETOOTH DEVICES (iOS)

iPad® :

Figure 22: List of devices in Bluetooth settings

- Go to the Settings App.
- Select the Bluetooth settings in the left hand column.

iPod® / iPhone® :

Figure 23: Select Bluetooth settings

- Go to the Settings App.

Figure 24: List of devices in Bluetooth settings

- Tap on the Bluetooth row to be taken to the Bluetooth settings

PAIR WITH TSL BLUETOOTH DEVICE

In the list of Bluetooth devices, the 3138 UHF reader will be identified by its serial number (3138-xxxxxxxx). Click on the corresponding row to pair with the reader.

iPad

iPod / iPhone

Figure 25: Identify device

After successfully pairing with the 3138 UHF Reader the device will be shown as ‘connected’.

iPad

iPod / iPhone

Figure 26: Device connected

If RFID Explorer is installed on your device then a prompt will appear requesting a connection to the newly added reader. Choose ‘Allow’ to launch RFID Explorer or ‘Ignore’ if the device is to be used with a different App.

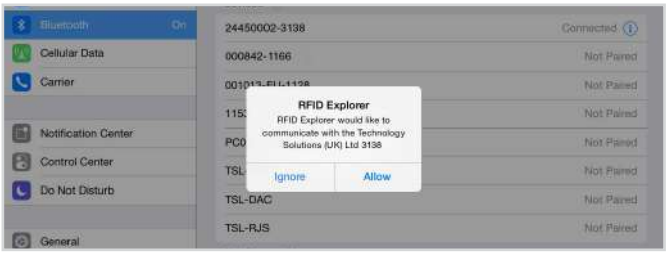

iPad

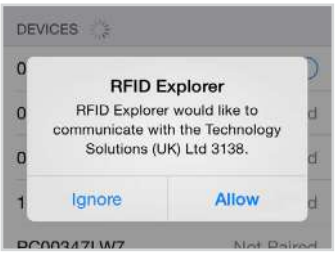

iPod / iPhone

Figure 27: Allow connection

Open TSL’s RFID Explorer App.

The RFID Explorer App can be downloaded from the App Store.

If the app is starting up for the first time, no reader will be selected. To select a reader, tap on 'Change Reader' in the menu to the left (iPad) or 'Paired Readers' (iPod/iPhone).

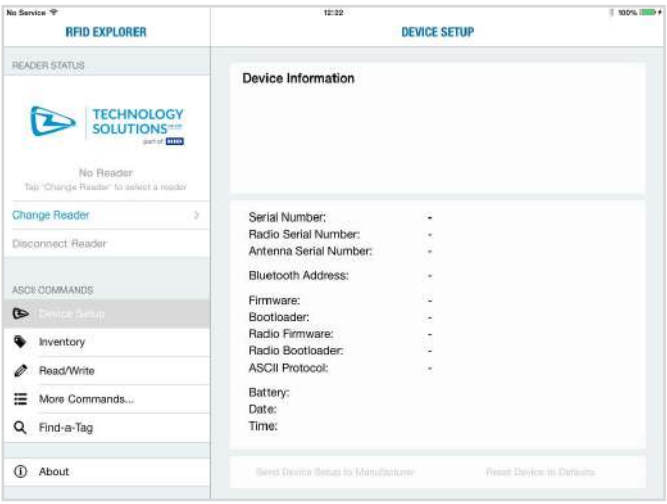

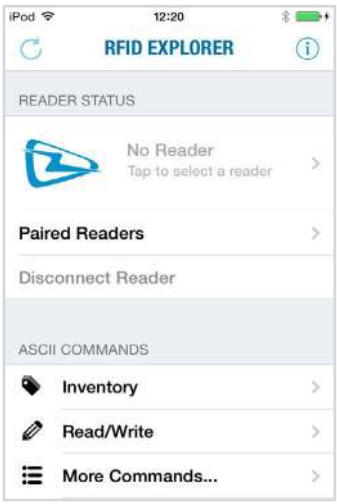

iPad iPod / iPhone

Figure 28: TSL RFID Explorer App on first load - no reader selected

If you have a reader selected from your device's Bluetooth settings as previously shown, continue from Figure 30. If the 'No devices are available' message in Figure 29 appears, you can also connect to a device through the RFID Explorer app. Press the + sign presented in the top right corner of the Select Reader section/screen.

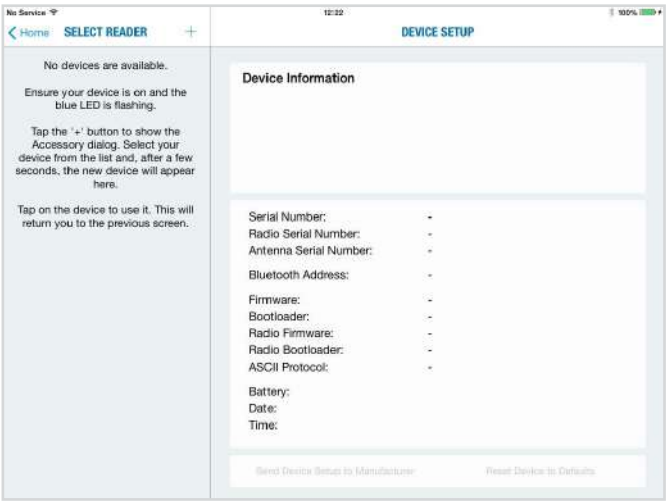

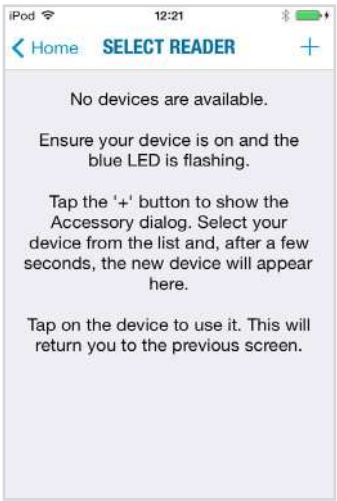

iPad iPod / iPhone

Figure 29: No devices are available

This will open a ‘Select An Accessory’ dialog box.
There may be a small delay in loading available readers.

Once the available readers have loaded select the 3138 UHF reader.

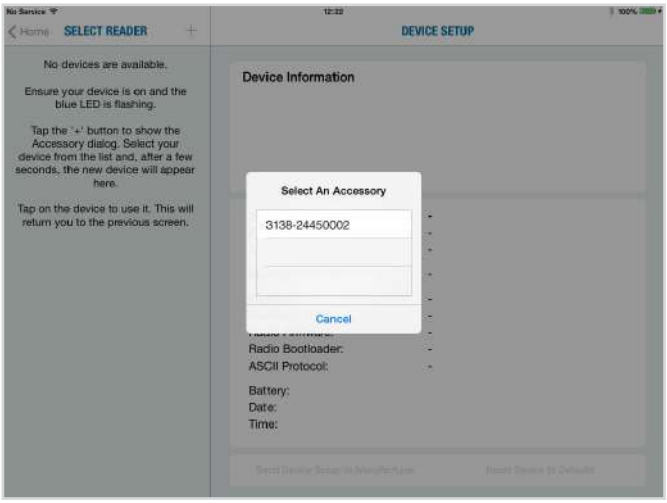

iPad

iPod / iPhone

Figure 30: Select the Reader to use

A list of compatible and currently paired Bluetooth devices will appear. Select the device to be used with the RFID Explorer App.

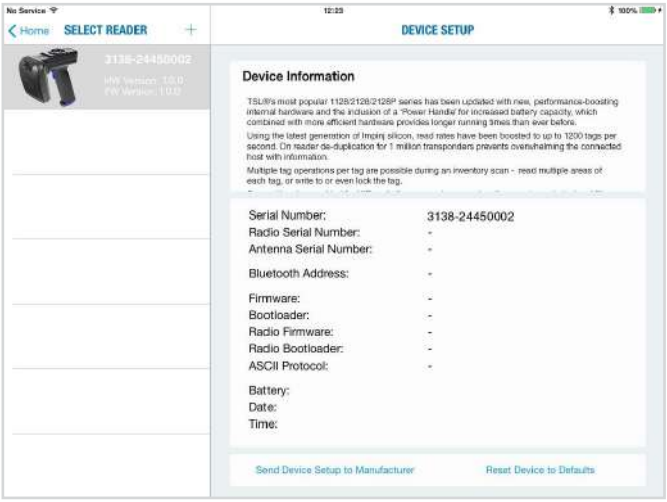

iPad

iPod / iPhone

Figure 31: List of paired Bluetooth devices

The selected device's image will appear, accompanied by relevant device information. The 'Inventory', 'Read/Write', 'Commands' and 'Find a Tag' features can now be explored. To maximise battery life it is recommended to release the 3138 UHF Reader from its Bluetooth connection if the reader is not to be used for a significant period of time.

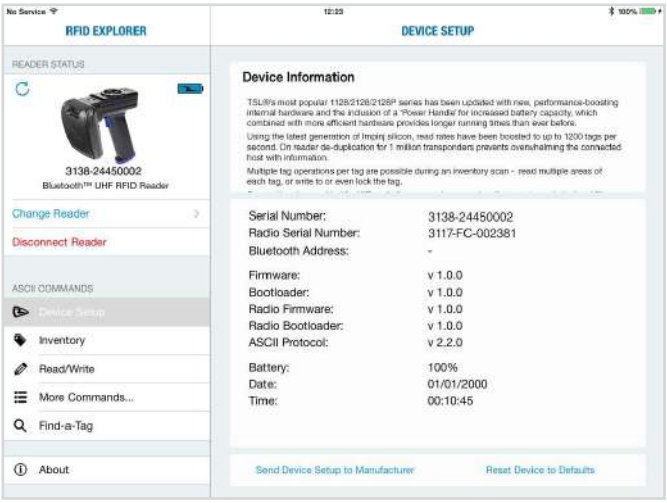

iPad

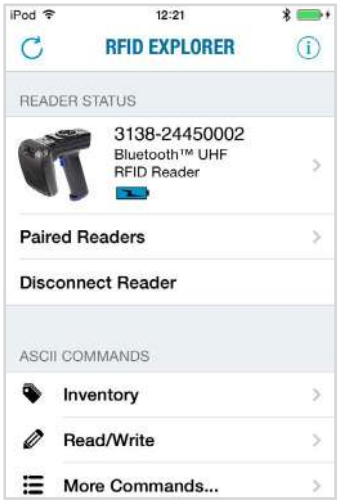

iPod / iPhone

Figure 32: 3138 UHF Reader selected and ready to use

MICRO SD CARD CONTENTS

AUTO RUN FILE (AUTO.TXT)

Once an SD card is installed an Auto Run file can be created on the SD card. The Auto Run file contains a list of ASCII 3 commands that are executed as the 3138 powers up. The file should be located at the root of the card and called “AUTO.TXT”. Although the file can contain any valid ASCII commands, one per line, it is intended that these have the take no action ‘-n’ flag specified to allow the default parameters for any command to be changed from the firmware defaults as the unit boots without actually executing the command.

For example to change the carrier power of the inventory command from 30dBm to 20dBm ‘.iv -o20 -n’ would be appended to the Auto Run file. As is the behaviour with command parameters this will set the output power for the inventory command until a new value is sent with this command. Therefore the inventories executed by the trigger, which executes ‘.iv’ will use the modified output power.

The Auto Run file can be manually created on the card before it is inserted into the 3138 or the ASCII command Write Command to Auto Run File ‘.wa’ can be used. The Read Auto Run File ‘.ra’ can be used to read back the contents of the Auto Run file or delete the file from the card.

LOG FILE (LOG.TXT)

Once an SD card is installed and logging is enabled a log file is created on the SD card. The file is located at the root of the card and called “LOG.TXT”. All the lines from every response to every command that is executed by the reader (including those performed from trigger actions) are appended to the end of the file. Events such as Power up are also appended to the file.
The ASCII Read Log File command (‘.rl’) is provided to enable or disable logging, to read the log file from the card or to delete the log file from the card.
Please note that the log file can quickly become large relative to the speed at which it can be downloaded using the Read Log File Command.
Start of a sample log output:

```
DT: 2025-03-15T16:46:58
EV: Log File created
CS: .ws -sa4 -sbepc -sd300833B2DDD9014000000000 -sl06 -so0002 -sts2 -dbepc -da330DE29525C0210005F5F88A
-dl06 -do0002
WW: 0
ME: No Transponder found
ER:005
DT: 2025-03-15T17:58:28
EV: Disconnected
DT: 2025-03-15T17:59:28
EV: Sleep
DT: 2025-03-18T09:18:21
EV: Wake up
CS: .al -dlon
OK:
DT: 2025-03-18T09:19:22
EV: Sleep
DT: 2025-03-18T10:07:42
EV: Wake up
DT: 2025-03-18T10:07:42
EV: Connected USB
CS: .al -dlon
OK:
CS: .iv LCMD 000000 -qss0 -qta
EP: 330DE29525C0210005F5F8F2
EP: 221001500000000000000027
OK:
```

SOFTWARE DEVELOPMENT

To make full use of the functionality of the 3138 UHF Reader, a customised software application will be required.

The new 3138 Bluetooth UHF RFID reader incorporates TSL's unique ASCII protocol for faster and easier application development. This sophisticated parameterised ASCII protocol provides the developer a powerful set of commands that carry out multiple actions locally within the Bluetooth reader. This approach enables multiple tag operations executed using simple pre-configured ASCII commands which not only speeds integration of the reader into applications but also abstracts the developer from the complexities of the underlying Native API. Simple, text based commands are sent to the reader and responses are returned as text. This allows straightforward access to RFID tag functions such as inventory, read and write. Details of the ASCII command mode are available for download from *www.tsl.com/3138-downloads*.

COMMAND SCAN

WHAT IS COMMAND SCAN?

3138 UHF RFID Readers equipped with a 2D Barcode Imager can use a patent-pending new feature called 'TSL Command Scan', that enables the use of barcode scanning to configure or otherwise adjust parameters of the RFID reader. This simple but powerful ability opens up a whole world of possibilities for developers to configure or commission TSL RFID Readers using convenient, time-saving methods.

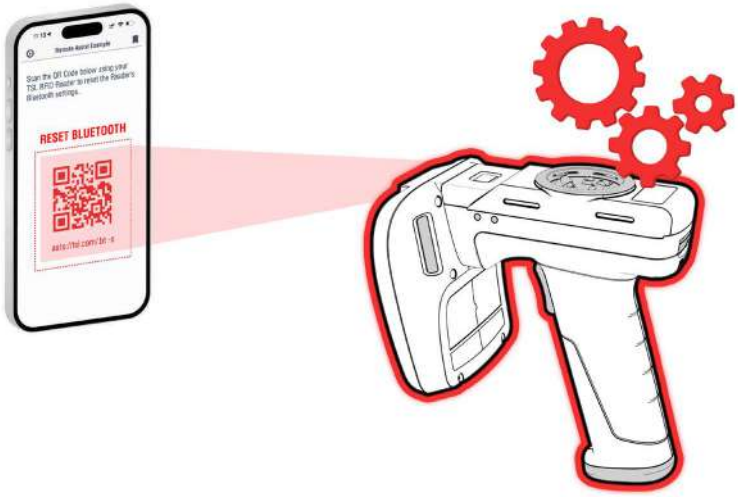

- Command Scan instantly configures the RFID Reader
- Allows on-the-fly adjustments of Reader parameters for different use cases, such as scanning multiple columns of data to a spreadsheet, using an audible 'tag-finding' mode, or reading just one tag at a time.
- Use Command Scan to configure the Reader's Autorun file to make persistent changes (i.e. the Reader retains its settings after powering off/on)
- Makes the commisioning phase of new readers much quicker - no need to connect to a PC, and Reader can be configured in an instant
- Add whatever 'ASCII Protocol' commands you like to the barcodes

USING COMMAND SCAN TO SWITCH BLUETOOTH MODE

- See "Changing the Bluetooth Operating Mode Using Command Scan" on page 25

MORE INFORMATION

- View some *Command Scan examples and video links*
- Visit *commandscan.tsl.com* to generate 2D barcodes, and build a list of commands to write to an autorun file on the target reader
- See the full list of *TSL ASCII Protocol commands* available for use within Command Scan barcodes

TROUBLESHOOTING AND MAINTENANCE

MAINTENANCE

For trouble-free service please observe the following tips when using the 3138 UHF Reader:

- Protect the 3138 UHF Reader from temperature extremes. Do not leave it on the dashboard of a car on a hot day, and keep it away from heat sources.

TROUBLESHOOTING

Symptoms	Possible cause	Action
Nothing happens when the trigger button is pressed.	If the LEDs are not on then the battery may be flat.	Charge the 3138 UHF Reader.
	The 3138 UHF Reader may have button actions disabled.	Check the 3138 UHF Reader configuration and restore to defaults if unsure.
	Other.	Work through *Troubleshooting Guide* on TSL Website
The orange LED flashes rapidly when charging.	There is a battery fault.	Replace the Power Handle.
	The battery pack temperature is outside recommended limits.	Ensure that charging only occurs between 5°C and 40°C.
The host Bluetooth discovery does not find the 3138 UHF Reader.	The 3138 UHF Reader has powered off.	Press the trigger button and ensure the blue LED is flashing.
	The 3138 UHF Reader is out of range.	Move the 3138 UHF Reader closer to the host.
	The Bluetooth friendly name of the 3138 UHF Reader has been changed.	Check the Bluetooth friendly name or restore the 3138 UHF Reader to factory defaults if unsure.
Opening the Bluetooth virtual com port does not connect to the 3138 UHF Reader.	The host has paired to a different Bluetooth device.	Pair to the required 3138 UHF Reader.
	The host Bluetooth function has an error.	Warm boot the host. If this does not help, delete the 3138 UHF Reader from the favourites list and re-pair.
Bluetooth pairing fails.	Reader SPP/HID operating Mode may have changed.	In the Bluetooth Settings, Forget/ Unpair the Reader and try again.
Other symptoms.	Other fault.	Run *ASCII Remote Diagnostic* and email result to *support@tsl.com* along with a description of the problem.

Copyright © 2025 Technology Solutions (UK) Ltd

REGULATORY INFORMATION

CE MARKING AND EUROPEAN ECONOMIC AREA (EEA)

Technology Solutions UK Ltd hereby declares that this radio equipment is in compliance with Directives 2014/53/EU and 2011/65/EU.

The reader operates using the specified frequencies up to the maximum output powers as in the table below:

Radio	Frequency of operation	Maximum Output Power
Bluetooth	2.4 GHz	12 dBm
UHF RFID	865 MHz - 868 MHz	30 dBm

CE MARK WARNING

This is a Class A product. In a domestic environment this product may cause radio interference in which case the user may be required to take adequate measures.

INFORMATION TO THE USER – FCC

Federal Communication Commission Interference Statement

This device complies with Part 15 of the FCC Rules. Operation is subject to the following two conditions: (1) This device may not cause harmful interference, and (2) this device must accept any interference received, including interference that may cause undesired operation.

NOTE: This equipment has been tested and found to comply with the limits for a Class A digital device, pursuant to part 15 of the FCC Rules. These limits are designed to provide reasonable protection against harmful interference when the equipment is operated in a commercial environment. This equipment generates, uses, and can radiate radio frequency energy and, if not installed and used in accordance with the instruction manual, may cause harmful interference to radio communications. Operation of this equipment in a residential area is likely to cause harmful interference in which case the user will be required to correct the interference at his own expense.

FCC Caution:

- Any changes or modifications not expressly approved by the party responsible for compliance could void the user's authority to operate this equipment.
- This transmitter must not be co-located or operating in conjunction with any other antenna or transmitter.

Radiation Exposure Statement:

The product complies with the FCC portable RF exposure limit set forth for an uncontrolled environment and is safe for intended operation as described in this manual. Further RF exposure reduction can be achieved if the product is kept as far as possible from the user body or the device is set to a lower output power if such function is available. The product must only be used as a handheld device.

Copyright © 2025 Technology Solutions (UK) Ltd

CANADIAN WARNING STATEMENTS

English

"Under Industry Canada regulations, this radio transmitter may only operate using an antenna of a type and maximum (or lesser) gain approved for the transmitter by Industry Canada.
To reduce potential radio interference to other users, the antenna type and its gain should be so chosen that the equivalent isotropically radiated power (e.i.r.p.) is not more than that necessary for successful communication."
"This device complies with Industry Canada licence-exempt RSS standard(s). Operation is subject to the following two conditions: (1) this device may not cause interference, and (2) this device must accept any interference, including interference that may cause undesired operation of the device."

Radiation Exposure Statement:

The product complies with the Canada portable RF exposure limit set forth for an uncontrolled environment and is safe for intended operation as described in this manual. Further RF exposure reduction can be achieved if the product is kept as far as possible from the user body or the device is set to a lower output power if such function is available. The product must only be used as a handheld device.

French

"Conformément à la réglementation d'Industrie Canada, le présent émetteur radio peut fonctionner avec une antenne d'un type et d'un gain maximal (ou inférieur) approuvé pour l'émetteur par Industrie Canada.
Dans le but de réduire les risques de brouillage radioélectrique à l'intention des autres utilisateurs, il faut choisir le type d'antenne et son gain de sorte que la puissance isotrope rayonnée équivalente (p.i.r.e.) ne dépasse pas l'intensité nécessaire à l'établissement d'une communication satisfaisante."
"Le présent appareil est conforme aux CNR d'Industrie Canada applicables aux appareils radio exempts de licence. L'exploitation est autorisée aux deux conditions suivantes : (1) l'appareil ne doit pas produire de brouillage, et (2) l'utilisateur de l'appareil doit accepter tout brouillage radioélectrique subi, même si le brouillage est susceptible d'en compromettre le fonctionnement."

Déclaration d'exposition aux radiations:

Le produit est conforme aux limites d'exposition pour les appareils portables RF pour les Etats-Unis et le Canada établies pour un environnement non contrôlé.
Le produit est sûr pour un fonctionnement tel que décrit dans ce manuel. La réduction aux expositions RF peut être augmentée si l'appareil peut être conservé aussi loin que possible du corps de l'utilisateur ou que le dispositif est réglé sur la puissance de sortie la plus faible si une telle fonction est disponible. Ce produit doit être utilisé exclusivement comme un appareil tenu à la main.

Copyright © 2025 Technology Solutions (UK) Ltd

BATTERY SAFETY

- Replacement of a battery with an incorrect type can defeat a safeguard (for example, in the case of some lithium battery types)
- Disposal of a battery into fire or a hot oven, or mechanically crushing or cutting a battery, can result in an explosion.
- Leaving a battery in an extremely high temperature surrounding environment can result in an explosion or the leakage of flammable liquid or gas.
- A battery subjected to extremely low air pressure may result in an explosion or the leakage of flammable liquid or gas.

Copyright © 2025 Technology Solutions (UK) Ltd

HEALTH AND SAFETY RECOMMENDATIONS

Ergonomic Recommendations

Caution: In order to avoid or minimize the potential risk of ergonomic injury, follow the recommendations below. Consult with your local Health & Safety Manager to ensure that you are adhering to your company's safety programs to prevent employee injury.

- Reduce or eliminate repetitive motion
- Maintain a natural position
- Reduce or eliminate excessive force
- Keep objects that are used frequently within easy reach Perform tasks at correct heights
- Reduce or eliminate vibration
- Reduce or eliminate direct pressure
- Provide adjustable workstations
- Provide adequate clearance
- Provide a suitable working environment
- Improve work procedures.

For vehicle installation and use

An air bag inflates with great force. DO NOT place objects, including either installed or portable wireless equipment, in the area over the air bag or in the air bag deployment area. If in-vehicle wireless equipment is improperly installed and the air bag inflates, serious injury could result.

RF signals may affect improperly installed or inadequately shielded electronic systems in motor vehicles (including safety systems). Check with the manufacturer or its representative regarding your vehicle. You should also consult the manufacturer of any equipment that has been added to your vehicle.

Power Supply

Use only TSL-approved cradles, chargers and power supplies with the 3138 UHF Reader. Use of an alternative power supply will invalidate any approval given to this device, void the warranty for the product and may be dangerous.

Copyright © 2025 Technology Solutions (UK) Ltd

Waste Electrical and Electronic Equipment (WEEE)

For EU Customers: All products at the end of their life must be returned to TSL for recycling. For information on how to return product please contact TSL.

WARRANTY

(A) Warranty

TSL's hardware Products are warranted against defects in workmanship and materials for a period of twelve (12) months from the date of shipment, unless otherwise provided by TSL in writing, provided the Product remains unmodified and is operated under normal and proper conditions. Warranty provisions and durations on software, integrated installed systems, Product modified or designed to meet specific customer specifications ("Custom Products"), remanufactured products, and reconditioned or upgraded products, shall be as provided in the applicable Product specification in effect at the time of purchase or in the accompanying software license.

(B) Spare Parts

Spare parts (i.e. parts, components, or subassemblies sold by TSL for use in the service and maintenance of Products) are warranted against defects in workmanship and materials for a period of thirty (30) days from the date of shipment. Spare parts may be new or originate from returned units under the conditions set forth in subsection D below.

(C) Repair of TSL branded hardware

For repairs on TSL branded hardware Products under this Agreement, including repairs covered by warranty, the repair services provided are warranted against defects in workmanship and materials on the repaired component of the Product for a period of thirty (30) days from the shipment date of the repaired Product, or until the end of the original warranty period, whichever is longer. Any such defects shall be notified to TSL in writing within 7 days of the same becoming apparent.

(D) Product Service

Products may be serviced or manufactured with parts, components, or subassemblies that originate from returned products and that have been tested as meeting applicable specifications for equivalent new material and Products. The sole obligation of TSL for defective hardware Products is limited to repair or replacement (at TSL's option) on a "return to base (RTB)" basis with prior TSL authorisation.

Customer is responsible for prompt shipment to TSL and assumes all costs and risks associated with this transportation; return shipment to the Customer will be at TSL's expense. Customer shall be responsible for return shipment charges for product returned where TSL determines there is no defect ("No Defect Found"), or for product returned that TSL determines is not eligible for warranty repair. No charge will be made to Buyer for replacement parts for warranty repairs. TSL is not responsible for any damage to or loss of any software programs, data or removable data storage media, or the restoration or reinstallation of any software programs or data other than the software, if any, installed by TSL during manufacture of the Product.

Copyright © 2025 Technology Solutions (UK) Ltd

(E) Original Warranty Period

Except for the warranty applying solely to the repaired component arising from a repair service as provided in Section C above, the aforementioned provisions do not extend the original warranty period of any Product that had either been repaired or replaced by TSL.

(F) Warranty Provisions

The above warranty provisions shall not apply to any Product:
(i) which has been repaired, tampered with, altered or modified, except by TSL's authorized service personnel;
(ii) in which the defects or damage to the Product result from normal wear and tear, misuse, negligence, improper storage, water or other liquids, battery leakage, use of parts or accessories not approved or supplied by TSL, or failure to perform operator handling and scheduled maintenance instructions supplied by TSL;
(iii) which has been subjected to unusual physical or electrical stress, abuse, or accident, or forces or exposure beyond normal use within the specified operational and environmental parameters set forth in the applicable Product specification; nor shall the above warranty provisions apply to any expendable or consumable items, such as batteries, supplied with the Product.

EXCEPT FOR THE WARRANTY OF TITLE AND THE EXPRESS WARRANTIES STATED ABOVE, TSL DISCLAIMS ALL WARRANTIES ON PRODUCTS FURNISHED HEREUNDER INCLUDING ALL IMPLIED WARRANTIES OF MERCHANTABILITY AND FITNESS FOR A PARTICULAR USE. ANY IMPLIED WARRANTIES THAT MAY BE IMPOSED BY LAW ARE LIMITED IN DURATION TO THE LIMITED WARRANTY PERIOD. SOME STATES OR COUNTRIES DO NOT ALLOW A LIMITATION ON HOW LONG AN IMPLIED WARRANTY LASTS OR THE EXCLUSION OR LIMITATION OF INCIDENTAL OR CONSEQUENTIAL DAMAGES OR CONSUMER PRODUCTS. IN SUCH STATES OR COUNTRIES, FOR SUCH PRODUCTS, SOME EXCLUSIONS OR LIMITATIONS OF THIS LIMITED WARRANTY MAY NOT APPLY.

The stated express warranties are in lieu of all obligations or liabilities on the part of TSL for damages, including but not limited to, special, indirect or consequential damages arising out of or in connection with the use or performance of the Product or service. TSL's liability for damages to Buyer or others resulting from the use of any Product or service furnished hereunder shall in no way exceed the purchase price of said Product or the fair market value of said service, except in instances of injury to persons or property.

TSL is not responsible for any damages incurred during shipment if the approved shipping container is not used. Shipping the units improperly can possibly void the warranty. If the original shipping container was not kept, contact your local distributor or TSL to have another sent to you.

TSL shall not be responsible for any injury, damage or loss of whatever kind caused directly or indirectly by the goods whether as a result of their manufacture, operation, use or otherwise and the customer shall indemnify TSL from any claim arising from any loss suffered by any third party.

ABOUT

ABOUT TSL

Technology Solutions UK Ltd (TSL®), part of HID, is a leading manufacturer of high performance mobile RFID readers used to identify and track products, assets, data or personnel.
For over two decades, TSL has delivered innovative data capture solutions to Fortune 500 companies around the world using a global network of distributors and system integrators. Specialist in-house teams design all aspects of the finished products and software ecosystems, including electronics, firmware, application development tools, RF design and injection mould tooling.
TSL is an ISO 9001:2015 certified company.

ISO 9001: 2015

CONTACT

Address:	Technology Solutions (UK) Ltd, Suite A, Loughborough Technology Centre, Epinal Way, Loughborough, Leicestershire, LE11 3GE, United Kingdom.
Telephone:	+44 1509 238248
Fax:	+44 1509 214144
Email:	*enquiries@tsl.com*
Website:	*www.tsl.com*

ABOUT HID

HID powers the trusted identities of the world's people, places and things. We make it possible for people to transact safely, work productively and travel freely. Our trusted identity solutions give **people** convenient access to physical and digital **places** and connect **things** that can be identified, verified and tracked digitally. Millions of people around the world use HID products and services to navigate their everyday lives, and billions of things are connected through HID technology. We work with governments, educational institutions, hospitals, financial institutions, industrial businesses and some of the most innovative companies on the planet. Headquartered in Austin, Texas, HID has over 4,000 employees worldwide and operates international offices that support more than 100 countries. HID is an ASSA ABLOY Group brand.
For more information, visit *www.hidglobal.com*.

Technology Solutions (UK) Ltd reserves the right to change its products, specifications and services at any time without notice.