Slingbox Quick Setup Guide

Welcome! Thank you for buying a Slingbox™ Personal Broadcaster. Follow these instructions to connect your new Slingbox and start watching your programs wherever you go.

Package Contents

- Slingbox Personal Broadcaster
- CD-ROM with Slingbox software
- Quick Setup Guide (this guide)
- S-Video cable
- 2 Audio/Video cables
- 2 Coaxial cables
- Ethernet cable
- IR Control cable
- Power adapter
- RF splitter

The Slingbox lets you watch your live TV programming from wherever you are by turning your computer into a personal TV.

Your Slingbox redirects, or "placeshifts," the TV signal from your antenna, cable box, satellite receiver, or digital video recorder (DVR) to your location of choice, whether in another room in your home or anywhere in the world with a high-speed Internet connection.

Four Simple Steps

Connecting the Slingbox is easy, and takes just a few minutes. These are the steps you will complete:

1. Connect your television signal (antenna, cable or satellite) to the Slingbox. If you have a cable box, satellite box or DVR, plug the IR Control cable into the Slingbox and attach the emitters onto your device (cable/satellite box or DVR).
2. Connect the Slingbox to your home network (wired or wireless).
3. Plug the Slingbox into an electrical outlet.
4. Install the software from the included CD on your computer and complete the Setup Wizard. Your computer must be running Windows® XP to use the Slingbox.

Turn the page to get started...

For the latest instructions and updates to this guide go to www.slingmedia.com/quicksetup1.html

About the Connections

The Slingbox needs just two things to stream your TV programming:

1. Your TV signal from an antenna, analog cable, cable/satellite box, or DVR
2. A high-speed Internet connection (DSL or cable)

If you are using an antenna or analog cable only (no cable box) go to step 1d on page 5.

1a Connect your TV Signal to the Slingbox: Cable/Satellite Box or DVR User

Connect your TV signal to the Slingbox **inputs** using option A, B or C below. If you have a cable or satellite box **AND** a DVR, connect your DVR to the Slingbox.

In addition to one of the connections below, complete step 1b on page 3 if you have to remove the cable or cables currently connecting your cable/satellite box or DVR to your TV to include the Slingbox in your setup.

IMPORTANT: Do not connect an A/V receiver to the Slingbox.

Option A Using an S-Video cable.

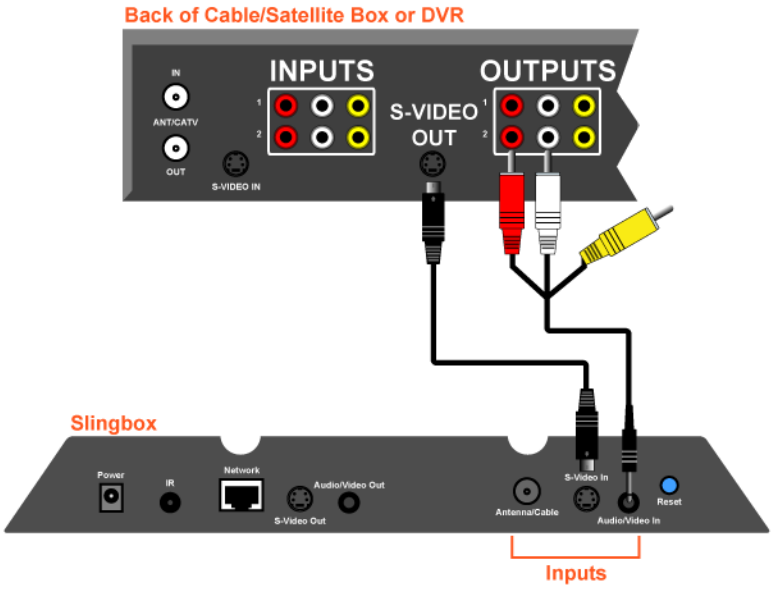

Option B No S-Video available.

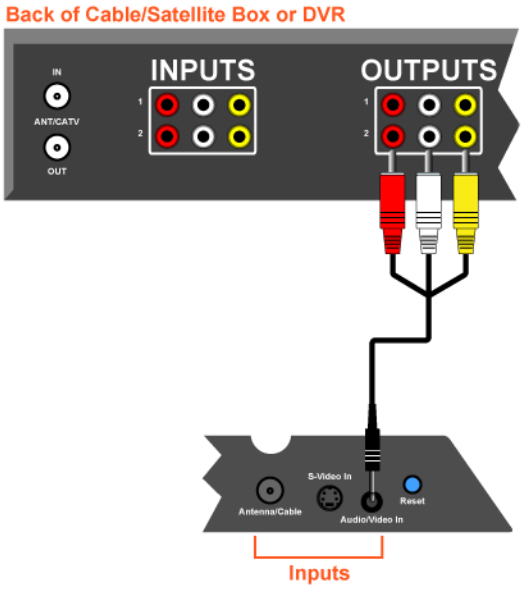

Option C Use this option if there are no available S-Video or A/V **outputs** on your device.

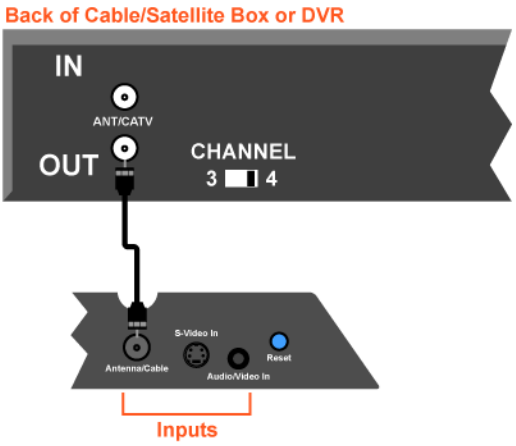

Next Step: Turn to page 4 and connect the IR Control cable.

For the latest instructions and updates to this guide go to www.slingmedia.com/quicksetup2.html

1b Pass-through Connection Back to TV (if needed)

Make one of these connections only if you have to remove the cable or cables currently connecting your cable/satellite box or DVR to your TV to include the Slingbox in your setup. You may need to do this if your device has only one set of outputs. This connection passes your TV signal through the Slingbox and back to your television.

Make sure to complete step 1a on page 2 in addition to this connection.

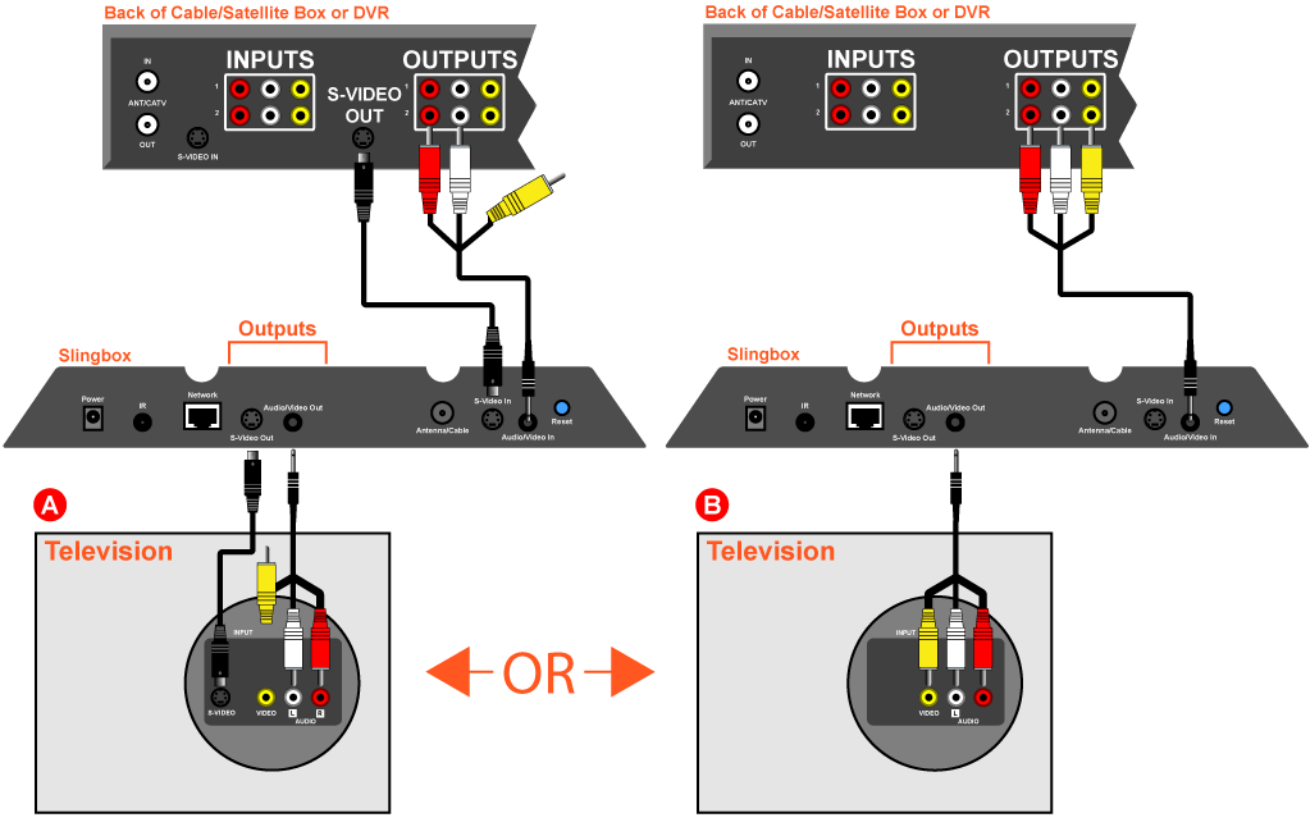

IMPORTANT: If you connected S-Video to the Slingbox, connect S-Video to your TV, as shown above.

IMPORTANT: If you connected A/V cables to the Slingbox, connect A/V cables to your TV, as shown above.

Next Step: Turn to page 4 and connect the IR Control cable.

For the latest instructions and updates to this guide go to www.slingmedia.com/quicksetup3.html

1c Connect the IR (Infrared) Control Cable: Cable/satellite box or DVR User

The IR Control cable allows the Slingbox to act as a universal remote, controlling the device you connect to its inputs. It works with any cable/satellite box or DVR, and many other devices.

Find the Infrared Sensor

Even though the Slingbox does not have a remote control, it controls the device you connect to it (cable/satellite box, or DVR) using the IR Control cable. The emitter end of the cable sends signals to your device's IR sensor, just like a remote control.

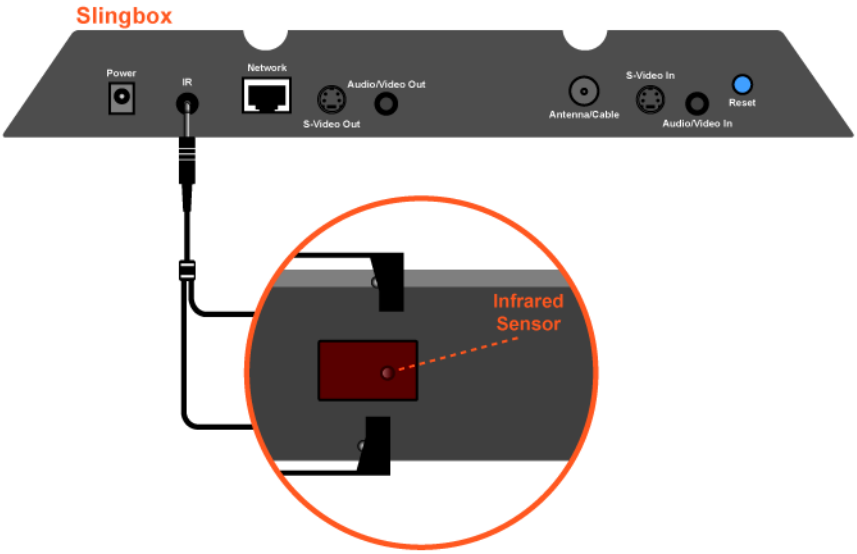

Front of Device (Cable/Satellite Box or DVR)

TIP: The infrared sensor is on the front of the cable/satellite box or DVR, usually behind a dark, sometimes reddish plastic window. If you don't see the sensor, shine a flashlight through the window and look for a small light bulb.

Connect the cable to the IR connector on the Slingbox. **Make sure to insert the cable all the way**. Place the emitter ends on the top and bottom of the device that is directly connected to your Slingbox (cable/satellite box or DVR) so they point at its IR sensor. Once you are sure you have placed an emitter correctly, remove the adhesive covering and affix the emitters so they extend out far enough to send a signal to your cable/satellite box or DVR.

IMPORTANT: The Setup Wizard will attempt to communicate with your device using the IR Control cable. Make sure you place the emitters over the infrared sensor on your device before you install the Slingbox software.

Next Step: Turn to page 6 and connect the Slingbox to your home network (router).

For the latest instructions and updates to this guide go to www.slingmedia.com/quicksetup4.html

1d Connect your TV Signal: Antenna or Cable User (no cable box)

Use this setup if your TV signal is antenna or analog cable. If the incoming antenna or cable line from your wall is connected directly to your TV, you'll need to use a cable splitter (not included) to send your TV signal to your TV and to your Slingbox.

You may need

Cable Splitter

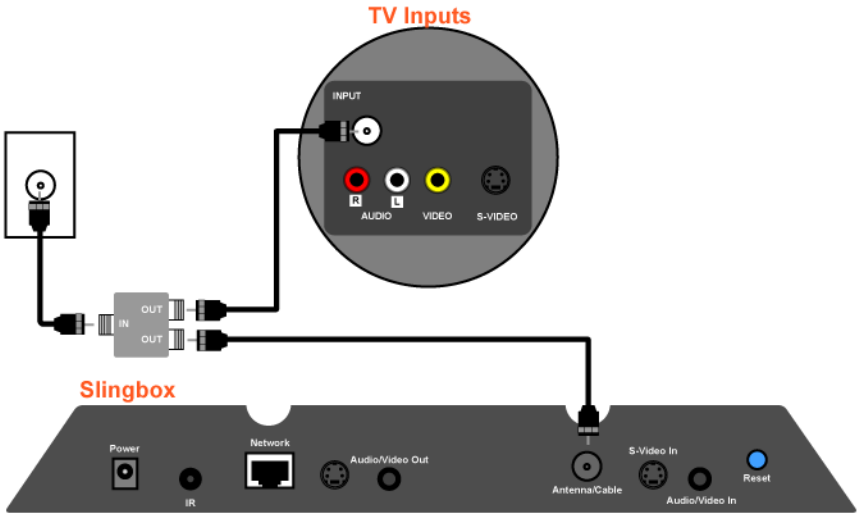

IMPORTANT: If you have a cable modem sharing the cable line, use a splitter with at least three outputs: one for your TV, one for your cable modem and one for the Slingbox.

No TV? No problem. You can also connect your TV signal directly to the Slingbox, as shown below.

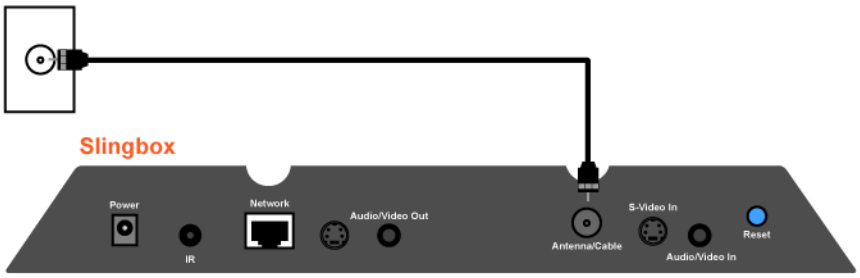

Next Step: Turn to page 6 and connect the Slingbox to your home network (router).

For the latest instructions and updates to this guide go to www.slingmedia.com/quicksetup5.html

2 Connect the Slingbox to Your Home Network (router)

The Slingbox works with any high-speed Internet connection or broadband home network. **You must have a router to use the Slingbox.** Choose one of the connection options below, based on what type of equipment you have or plan to use.

TIP: Go to **www.slingmedia.com/network** for a list of recommended routers, wireless bridges and Powerline bridges. Make sure to follow the installation instructions that come with the equipment you purchase.

Wired Ethernet Connection

If your Slingbox is located near an Ethernet jack or your router, use the supplied Ethernet cable to connect the Slingbox to your network.

No Ethernet jack near your TV signal? Choose one of the options below if there is no Ethernet jack within reach of your Slingbox.

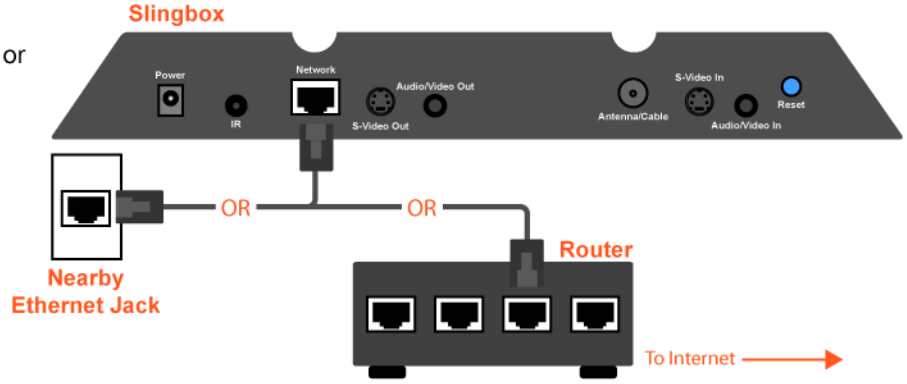

Optional Setup: No New Wires

If you don't have an Ethernet jack near your TV, an easy option is to use a pair of Ethernet-to-Powerline bridges, which use your existing in-home electrical outlets to connect to your network. You'll need two bridges to connect the Slingbox to your home network: connect one to your Slingbox and the other to your router.

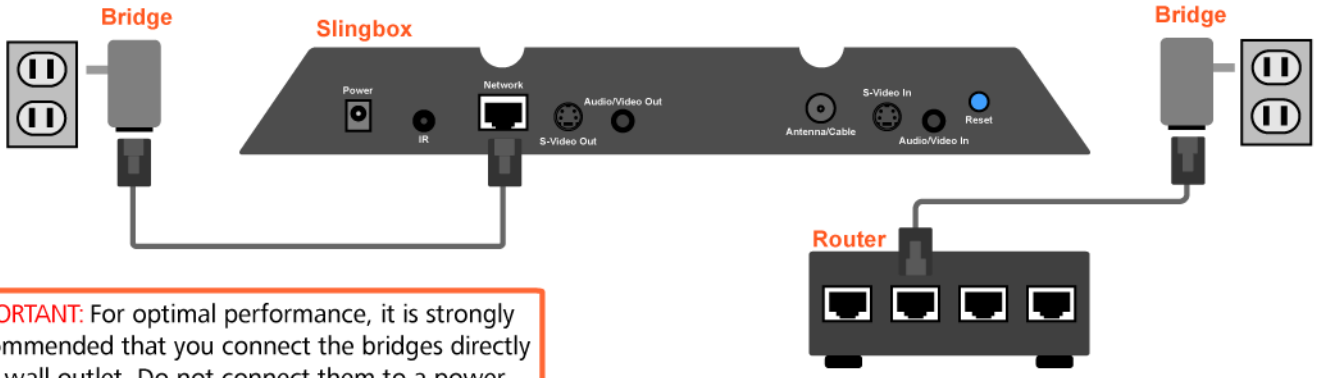

IMPORTANT: For optimal performance, it is strongly recommended that you connect the bridges directly to a wall outlet. Do not connect them to a power strip or extension cord.

Optional Wireless Connection

You must have a wireless home network for this setup. For wireless broadband use of your Slingbox, use an Ethernet-to-wireless bridge (sometimes called a wireless game adapter). A bridge connects devices out of network cable reach of your router wirelessly to your home network.

IMPORTANT: Set up your bridge to work with your existing wireless home network before you connect the bridge to your Slingbox.

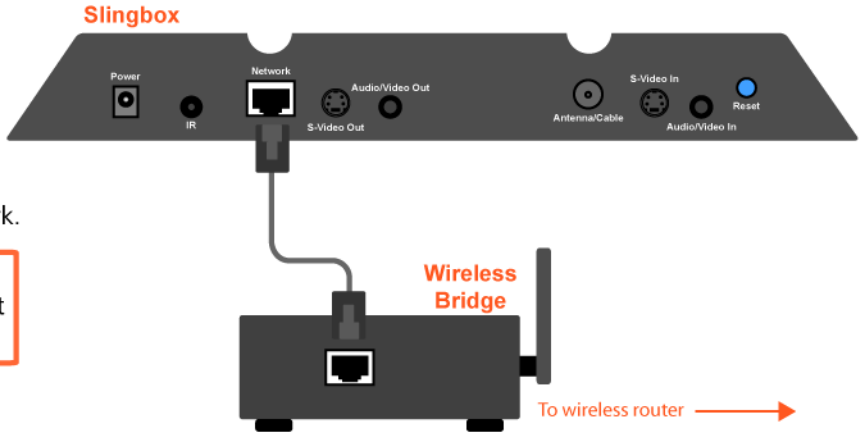

Next Step: Turn to page 7 and plug in the Slingbox.

For the latest instructions and updates to this guide go to www.slingmedia.com/quicksetup6.html

3 Plug in the Slingbox Power Adapter

Connect the supplied power adapter to the Slingbox and to an electrical outlet. When plugged in, the power light ⏻ comes on, and then the lights will blink a few times as the Slingbox starts up.

The network light 🖧 remains on if the Slingbox successfully received an IP address (the Slingbox is recognized by your router as a new device on your network). If both the power and network lights are on, you are ready to install the software.

If the network light does not come on within 30 seconds, make sure that you correctly followed step 2.

4 Install the Slingbox Software

IMPORTANT: The Setup Wizard and the SlingPlayer application automatically discover the Slingbox on your network. This process may be blocked by certain security software—such as Norton or McAfee—or be categorized as "intruding devices." If this occurs, the SlingPlayer will have trouble communicating with the Slingbox. You will need to change your security software settings to unblock the Slingbox as a device.

Before you begin...

- Make sure your computer is connected to the same home network as your Slingbox.
- If you have a cable box, satellite box or DVR, make sure it is set to live television and is not recording, and no menu is on your TV screen.

TIP: If you have a laptop computer, it's easier to install the software in the same room as your Slingbox, so you can watch the progress and see the light show!

About the Setup Wizard

You will be guided through setting up the Slingbox to work with your television signal and your home network. If you are a cable/satellite box or DVR user, you need to know the brand and model number of the device. The Slingbox will use your brand's code to control your device using the IR Control cable.

Insert the supplied CD into your computer and run the Setup Wizard. If the installation doesn't automatically start, run the "Setup.exe" file on the installation CD. Follow the on-screen steps to complete setup.

TIP: Note the brand name and the model number of the device you connected to your Slingbox.

Brand: _____

Model #: _____

If you connected the cables correctly, your television signal displays during setup. Recheck your connections if you don't see the signal. Make sure all of the cables are securely attached.

Check out the rest of this guide to:

- Learn how to use your new Slingbox
- Set up your Slingbox for remote viewing

For the latest instructions and updates to this guide go to www.slingmedia.com/quicksetup7.html

Watching Your Programs

Start using your Slingbox by double-clicking the "Launch SlingPlayer" icon on your desktop.

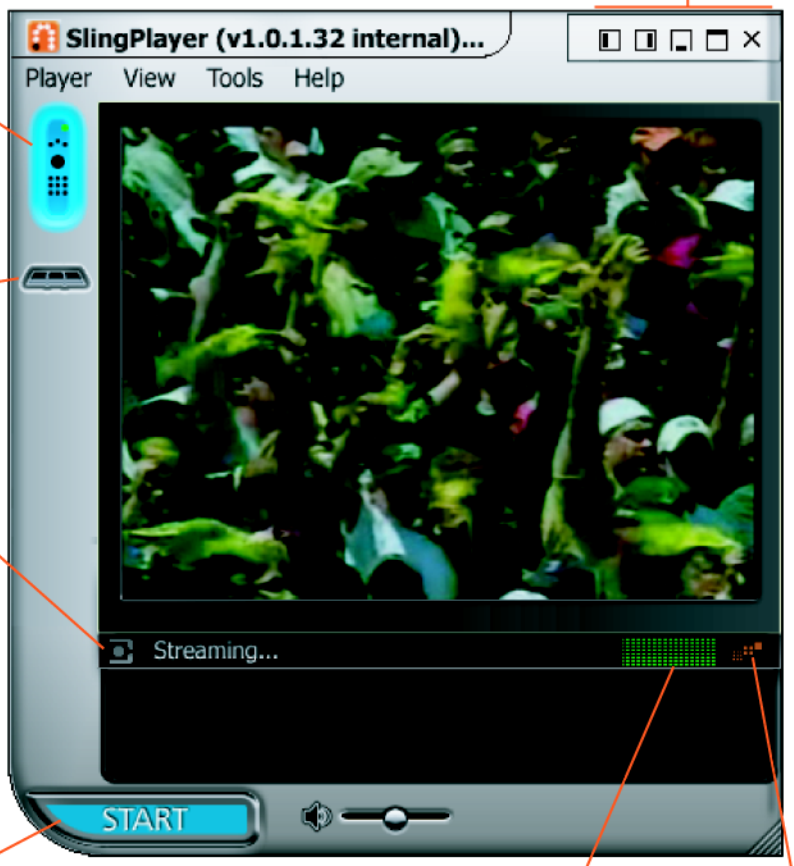

Move the Video

Move, minimize, expand or "dock" the SlingPlayer on your desktop.

SlingPlayer Remote Control

Click to display or hide the SlingPlayer remote control.

Slingbox Directory

Click on the Slingbox icon If you have multiple Slingboxes.

Speed up Menu Navigation

When you use the remote control to access your cable box, satellite box or DVR menus and guides, the navigation pace is automatically quickened with "Control Mode."

With Control Mode enabled, you can quickly get in and out of menus and get back to watching your video.

Start Watching your TV

Click to start streaming from your Slingbox. Click again to stop streaming.

TV Profile

Click to adjust the settings for the best possible viewing experience.

Volume Controls

Click the speaker icon to mute the volume.
Move the slider to control the volume.

Sling Karma Meter

For the latest instructions and updates to this guide go to www.slingmedia.com/quicksetup8.html

Remote Control

The SlingPlayer™ remote control displays the buttons for the device you have connected to your Slingbox.

Access your Video Menus

Use all of your cable box, satellite box or DVR menus and guides. You can even schedule recordings on your DVR right from the SlingPlayer.

Control the Action

Familiar playback options for your recorded programs and live action. Play, pause, skip ahead and back...You're in control of your DVR wherever you go.

Channel Surf

Tune to a channel while you're watching live television.

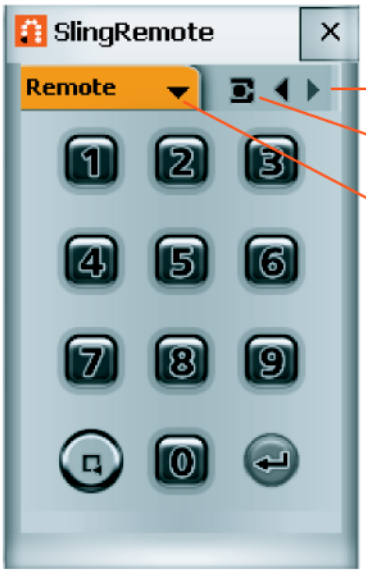

Cycle through all available remote displays.

Enable and disable Control Mode.

Quickly access any remote control command through this menu.

TIP: You may find that your actual remote control's buttons do not perfectly match the SlingPlayer remote control. Place your mouse cursor over a button to see a description of what the button does.

For the latest instructions and updates to this guide go to www.slingmedia.com/quicksetup9.html

Watching Your Programs...from Anywhere

To watch your programs from another computer outside of your home network (over the Internet) your router (also called a gateway) needs to give access to your Slingbox. Routers control your home network's Internet access through numbered ports. To watch programs remotely, you need to open a port on your router that your Slingbox will use.

IMPORTANT: Some older routers (more than a few years old) do not reliably support Universal Plug and Play (UPnP), a technology that allows devices connected to a network to automatically communicate with each other. Newer routers should support UPnP, though may require you to enable the setting. The Setup Wizard will attempt to automatically communicate with your router using UPnP. If it can't, you will need to manually configure the settings used for your Slingbox. Refer to the documentation that comes with your router for details about UPnP.

By default, the security features on most routers prevent access to your Slingbox from outside your home network. To open a port, you need to set up your router for "port forwarding."

Refer to your router manufacturer's documentation or support site for the actual instructions. Router screens can vary, but typically, you need to do the following to open a port:

1. Using your Web browser, go to your router's administration screens and find the screen that allows you to set port forwarding. It may be within an advanced section called "Port Forwarding" or "Forwarding."

2. Add a new port. Enter the port number for your Slingbox. It is recommended that you choose a number higher than 5000. Enter this number as both the start and end port number.

3. Enter your Slingbox IP address in an available IP address field. To find the IP address, start the SlingPlayer application and move your mouse over the name of your Slingbox.

4. Make sure you enable TCP.

TIP: This information is displayed during the Setup Wizard. However, if you forget to configure your router during setup, these instructions will help.

NAME/SERVICE	START PORT	END PORT	IP ADDRESS
Slingbox	5001	5001	192.168.0.2

Your Slingbox IP address will be different

Note: Some routers configure port forwarding through "Services." If you see an "Add Service" button, click it and name the new service "Slingbox."

IMPORTANT: Make sure to leave your router on at all times.

For more information on port forwarding, refer to the documentation that comes with your cable or DSL router and look for port forwarding. You can also see the help topics on the manufacturer's Web site for your particular router. This should give you detailed instructions about how to set up your router so you can watch your Slingbox from anywhere.

IMPORTANT: The SlingPlayer application must be installed on the computer you use for remote viewing.

TIP: Note your Slingbox Finder ID provided during the Setup Wizard so you can access your Slingbox remotely from another computer.

Your Finder ID: _____

For the latest instructions and updates to this guide go to www.slingmedia.com/quicksetup10.html

FCC Statement

Changes or modifications not expressly approved by Sling Media Inc., could void the user's authority to operate this equipment.

NOTE: This equipment has been tested and found to comply with the limits for a Class B digital device, pursuant to Part 15 of the FCC Rules. These limits are designed to provide reasonable protection against harmful interference in a residential installation. This equipment generates uses and can radiate radio frequency energy and if not installed and used in accordance with the instructions may cause harmful interference to radio communications. However, there is no guarantee that interference will not occur in a particular installation. If this equipment does cause harmful interference to radio or television reception, which can be determined by turning the equipment off and on, the user is encouraged to try to correct the interference by one or more of the following measures:

- Reorient or relocate the receiving antenna.
- Increase the separation between the equipment and receiver.
- Connect the equipment into an outlet on a circuit different from that to which the receiver is connected.
- Consult the dealer or an experienced radio/TV technician for help.

Product Specifications

Product Name	Slingbox Personal Broadcaster
Model #	SBPB1
Dimensions	10.6"(w) x 1.6"(h) x 4" (d)
Weight	~1.5 lbs.
Power requirements	6V/1.6A
Inputs	RCA audio (L/R) Composite video S-video RF/Coaxial
Outputs	RCA audio (L/R) Composite video S-video
Device control	IR emitter
Network	RJ-45 Ethernet
Display (3) front panel LEDs:	Status Network Power
TV tuner	NTSC (built-in)

Power Adapter Specifications

Make	Hon-Kwang Electric
Model #	HK-A112-A06
Input Voltage Range	100VAC to 240VAC
Input Frequency Range	47 Hz to 63 Hz
Input In-rush Current	50A Max
Input Current	0.45A Max
Output Voltage	+6V
Output Regulation	5.7~6.3V
Output Load Range	0~2.0A
Output Ripple & Noise	60mVMax @20MHz BANDWIDTH