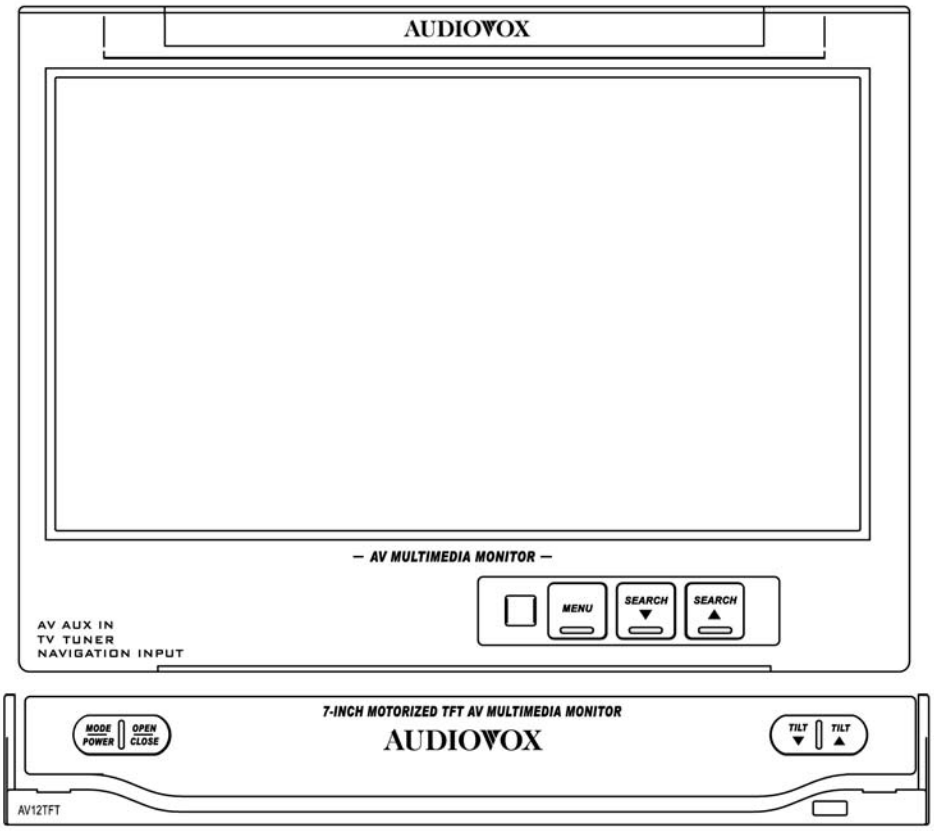

MOTORIZED 7” WIDE TFT LCD MONITOR

WITH COLOR TV

MODEL NO. : UMTVH-2100

ANY CHANGES OR MODIFICATIONS IN CONSTRUCTION OF THIS UNIT DEVICE WHICH IS NOT APPROVED BY THE PARTY RESPONSIBLE FOR COMPLIANCE COULD VOID THE USER'S AUTHORITY TO OPERATE THE EQUIPMENT.

WARNING

DO NOT WATCH MONITOR WHILE DRIVING

CONTENTS

WARNING
CAUTION
UNIT
1. MONITOR
2. REMOTE CONTROL
3. REMOTE CONTROL BATTERY
BASIC OPERATION
1. POWER ON/OFF
2. OPENING THE MONITOR
3. CLOSING THE MONITOR
4. ADJUSTING TILT POSITION
5. ADJUSTING MOVE POSITION
6. ADJUSTING LEFT/RIGHT VIEWING POSITION
7. SELECTING MODE
8. AUDIO MUTE
9. ADJUSTING VIDEO PICTURE MODE (ASPECT)
10. SELECTING THE MENU
FUNCTION
1. FM TRANSMITTER CONTROL
2. TILT POSITION CONTROL
3. MOVE POSITION CONTROL
CONTROL
1. NAVIGATION AUDIO
2. WATCHING NAVIGATION
3. SETTING THE CAMERA IN
4. WATCHING THE REAR VIEW
5. WIRING CONNECTION
6. CAMERA ANGLE CONTROL
7. SCREEN ASPECT CONTROL
PICTURE
1. CONTRAST CONTROL
2. BRIGHT CONTROL
3. COLOR CONTROL
4. TINT CONTROL
5. DIMMER CONTROL

WATCHING TV
1. MENU CONTROL
2. CHANNEL CONTROL
3. FINE TUNING CONTROL
4. AUTO MEMORY
5. CHANNEL SEARCH
WARNING SCREEN
INSTALLATION
BASIC CONNECTION
CONNECTING TO AV SOURCES
SPECIFICATIONS
TROUBLE SHOOTING

WARNING

The exclamation mark in triangle and WARNING mark are intended to alert the user to the important operating instructions. Wrong operations will result in severe injury to the unit.

DO NOT WATCH MONITOR WHILE DRIVING

Watching the video while driving may interrupt driving and may cause an accident.

DO NOT OPERATE ANY FUNCTION THAT TAKE YOUR ATTENTION AWAY FROM DRIVING YOUR VEHICLE

Operation of some functions for this unit is very complicated. Because of this, it is necessary to put these functions into a special SETUP screen. This will restrict operation of these functions only when the vehicle is parked. This is to make the driver's attention to the road and not to this unit. Any function that requires driver's attention for a long time should be performed only after you stop the car. Always stop the vehicle in a safe place before performing these functions. Performing these functions while driving may result in a serious accident.

DO NOT DISASSEMBLE

Attempts to disassemble may lead to an accident, fire and / or an electric shock.

KEEP SMALL ARTICLES OUT OF REACH OF CHILDREN

Keep small things (screws etc.) in places not accessible to children. If swallowed, consult a physician immediately.

FUSE REPLACEMENT

When replacing the fuses, the replacement must be the same amperage as shown on the fuse holder. If the fuse(s) blow more than once, carefully check all electrical connections for short circuit, also have your vehicle's voltage regulator checked.

DO NOT USE IMMEDIATELY IF A PROBLEM APPEARS

When a problem appears, stop using the system immediately and contact the dealer from whom you purchased the equipment.

CAUTION

DO NOT RAISE THE VOLUME EXCESSIVELY

Keep the volume at a specific level which you can still hear outside noise while driving .
Keeping the volume loud may cause an accident.

DO NOT USE THIS EQUIPMENT OUTSIDE THE VEHICLE

Do not use this equipment for purpose other than those listed for a vehicle.
Failure to do so may result in an electric shock or an injury.

HOW TO USE THE BATTERIES

Do not mix new batteries with old batteries and do not replace with other than specified batteries. When inserting the batteries, be sure to observe proper polarity (+ and -) as instructed. Battery rupture or chemical leakage can cause an injury or equipment malfunction.

TEMPERATURE

Be sure the temperature inside the vehicle is between +60℃ (+140°F) and –5℃(+23°F) before turning your unit on.

MAINTENANCE

If you have problems, do not attempt to repair the unit yourself. Return it to your dealer who you purchased it from.

INSTALLATION LOCATION

Make sure the unit will not be exposed to :
▶Direct sun & heat
▶High humidity
▶Excessive dust
▶Excessive vibration

INFORMATION TO THE USER

This equipment has been tested and found to comply with the limits for a Class B digital device, pursuant to part 15 of the FCC Rules. These limits are designed to provide reasonable protection against harmful interference in a residential installation. This equipment generates, uses and can radiate radio frequency energy and, if not installed and used in accordance with the instructions, may cause harmful interference to radio communications. However, there is no guarantee that interference will not occur in a particular installation. If this equipment does cause harmful interference to radio or television reception, which can be determined by turning the equipment off and on, the user is encouraged to try to correct the interference by one more of the following measures:

-. Reorient or relocate the receiving antenna.

-. Increase the separation between the equipment and receiver.

-. Connect the equipment into an outlet on a circuit different from that to which the receiver is connected.

-. Consult the dealer or an experienced radio/TV technician for help.

UNIT

1. MONITOR

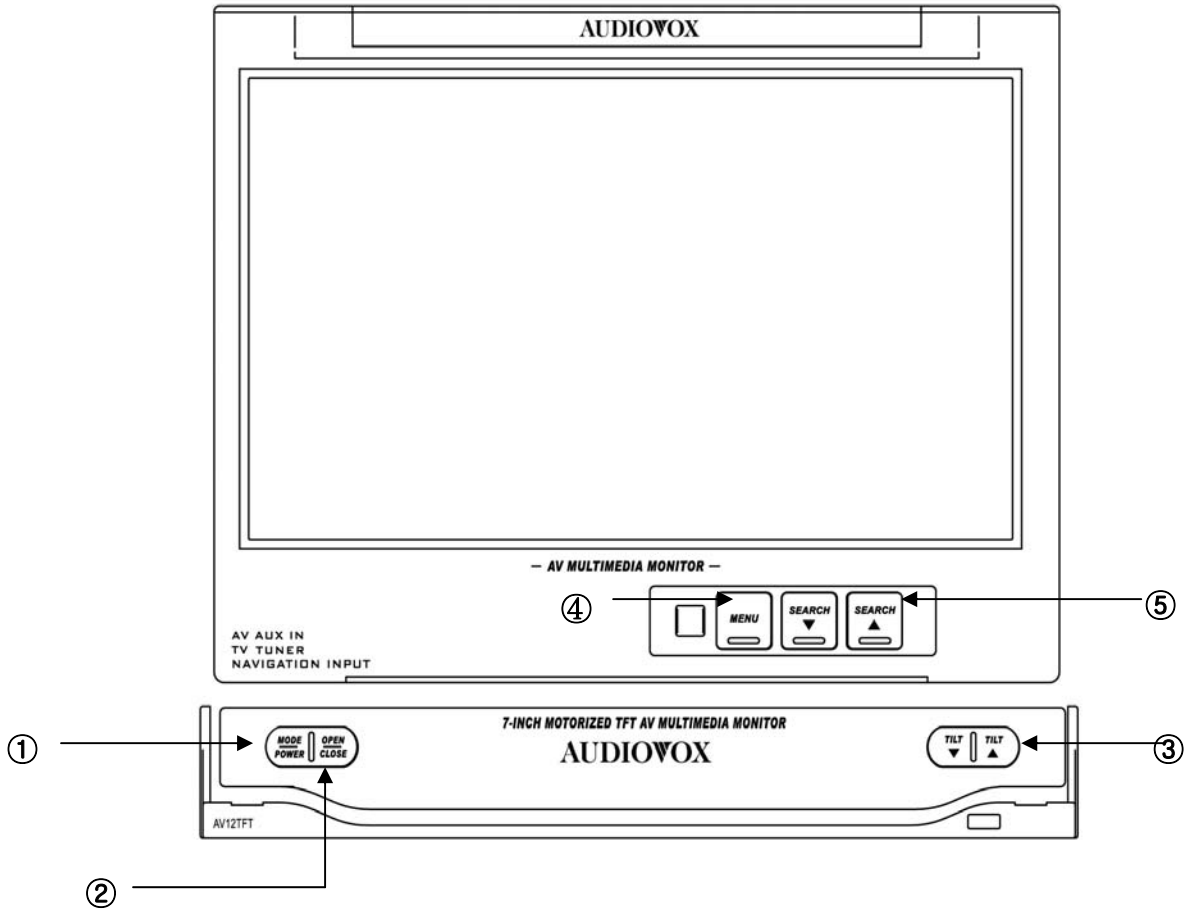

① POWER ON / OFF / MODE BUTTON

② OPEN / CLOSE BUTTON

③ TILT UP / DOWN BUTTON

④ MENU BUTTON

⑤ SEARCH UP / DOWN BUTTON

2. REMOTE CONTROL

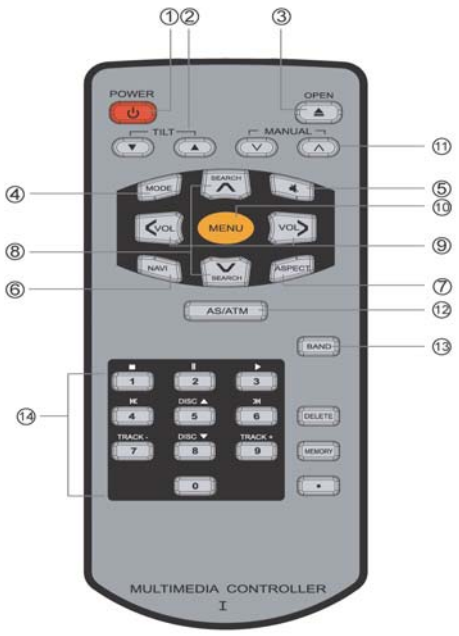

1. POWER ON/OFF BUTTON
2. TILT UP/DOWN BUTTON
3. OPEN/CLOSE BUTTON
4. MODE SELECTION BUTTON
5. SOUND MUTE BUTTON
6. NAVIGATION BUTTON
7. ASPECT SELECTION BUTTON
8. SEARCH UP/DOWN BUTTON
9. VOL ◀ / ▶: TILT UP/DOWN BUTTON
10. MENU BUTTON
11. MANUAL SEARCH BUTTON
12. AUTO SEARCH/ AUTO MEMORY BUTTON
13. BAND SELECTION BUTTON
14. NUMERIC BUTTONS

3. REMOTE CONTROL BATTERY

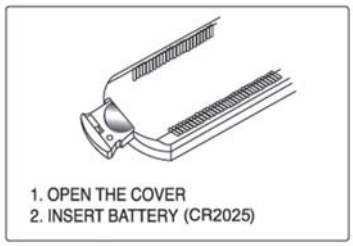

- Do not insert battery in the wrong direction.
- Be sure to observe the correct polarity (+/-) as indicated in the battery compartment.
- It is dangerous to charge/heat/open or short circuitry the battery.
- Please remove the battery in case of not using the remote control for a long period of time.
- It is time to replace the battery if the remote control does not work properly or if the operating range becomes reduced.
- Should battery leakage occur, clean the battery compartment with a soft cloth and replace with a new battery.

INCORRECT BATTERY USEAGE MIGHT CAUSE EARLY DISCHARGE, LEAKAGE OR CORROSION DAMAGE.

USING THE REMOTE CONTROL

- The remote control should be aimed directly towards the remote sensor of the Unit.
- Avoid dropping the remote control
- Avoid spilling liquids on the remote control or exposing it to extreme heat.
- The remote control should be pointed at the remote sensor in order for the Unit Monitor to function correctly.
- Distance: Maximum of 16 feet from the front of the remote sensor.
- Angle: Approximately +/-30 from center.
- Please do not locate the Unit where direct sunlight or fluorescent illumination might shine directly at the remote sensor.

BASIC OPERATION

1. POWER ON/OFF

1) POWER ON

(1) Press the POWER button on the unit or on the remote control to turn the power on. But the monitor will not be opened and you can listen to the sound of this unit.

(2) You can also turn the power on by pressing the OPEN/CLOSE button. The power will be on and the monitor will be opened.

2) POWER OFF

(1) Press the POWER button on the unit or on the remote control again to turn the power off.

(2)If you turn the power off by pressing the POWER button when the monitor is opened, the monitor will be closed and it will be turned off. If the car key is pulled out, the monitor will be closed automatically.

2. OPENING THE MONITOR

Press OPEN/CLOSE button, the monitor will be opened.

NOTE

If OPEN/CLOSE button is pressed with the monitor closed and powered off, the monitor will be opened and the power will be turned on.

3. CLOSING THE MONITOR

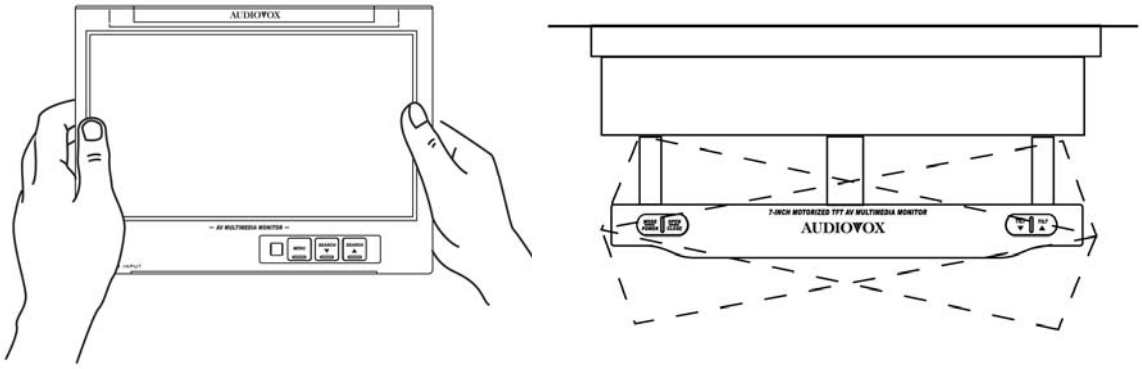

1) Press OPEN/CLOSE button on the unit or on the remote control. The monitor will be closed.
2) If it is not closed, hold left and right upper side of the monitor and make the monitor parallel with the unit as the picture. And press OPEN/CLOSE button to close the monitor.

NOTE

1) If the monitor is not parallel to the front of the unit, the monitor will not be closed.
2) If OPEN/CLOSE button is pressed while the unit is powered on, the monitor will be closed but the power is still on. Press the POWER button to turn the power off.

4. ADJUSTING TILT POSITION

The tilt position can be adjusted in 5 steps by pressing TILT UP/DOWN buttons. Each time you press TILT UP button, the monitor will swing one step backward and each time you press TILT DOWN button, the monitor will swing one step forward.

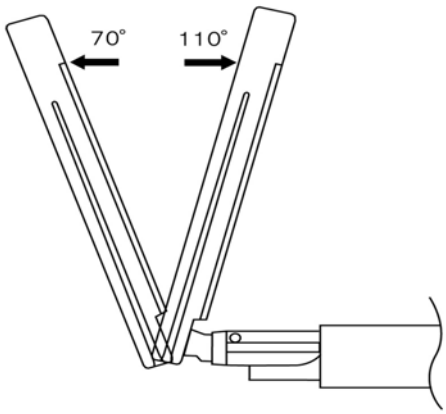

NOTE

The TILT position also can be adjusted by pressing VOL ◀ / ▶ buttons on the remote control.

5. ADJUSTING MOVE POSITION

1) Press MENU button to show FUNCTION on the screen.
2) Press SEARCH ▲/▼ button to select MOVE.
3) Press VOLUME ▶button to move the unit one step forward(50mm). The menu will show the position at 1, 2, 3.
   Press VOLUME ◀button to move the unit one step backward(50mm). The menu will show the position at 2, 1, 0.

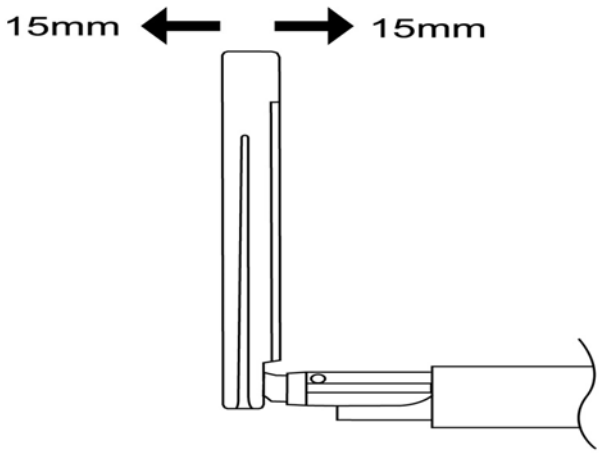

6. ADJUSTING LEFT/RIGHT VIEWING POSITION

The monitor's left/right position can be adjusted for easier viewing by hand as the picture below.

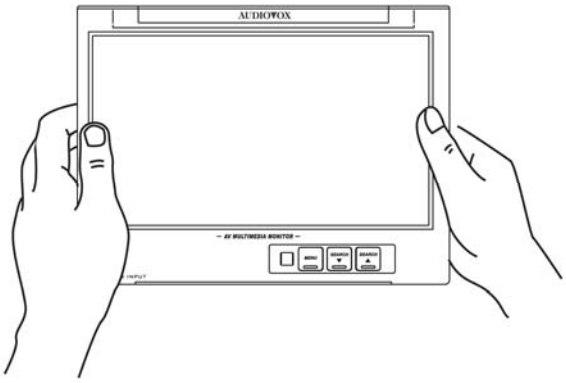

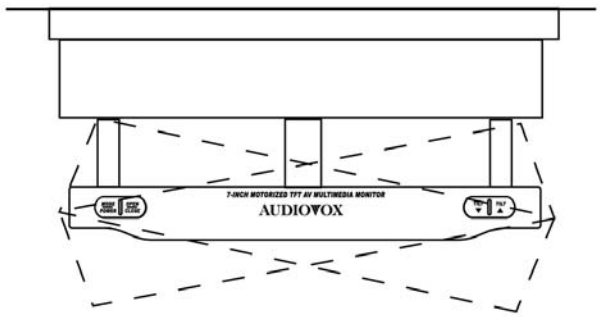

7. SELECTING MODE

Press MODE button to select the desired mode. Each time you press this button, the mode changes as follows.

AV1 -> AV2 ->AV3 ->TV

NOTE

AV3 has only video input.

8. AUDIO MUTE

Press MUTE button to make the sound mute. Press MUTE button again to return to the previous audio level.

9. ADJUSTING VIDEO PICTURE MODE (ASPECT)

Each time you press ASPECT button, the picture mode changes Normal, Full, and Wide mode.

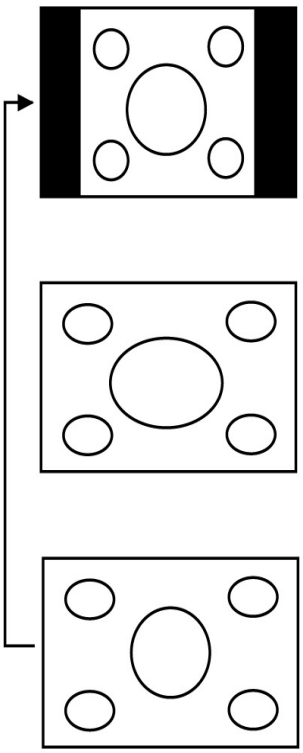

NORMAL MODE

The monitor displays normal picture at the center of the screen with the proportion of 4 to 3. The screen shows a vertical black belt at left and right side.

FULL MODE

The monitor displays normal picture wider by stretching out horizontally with the proportion of 16 to 9.

WIDE MODE

The monitor displays normal picture wider by unevenly stretching out horizontally with the proportion of 16 to 9. The stretching proportion is bigger toward at left and right side of the picture.

NOTE

You can also select the picture mode manually by pressing MENU button on the unit as follows.

1) Press MENU button repeatedly until CONTROL MENU is selected.
2) Press SEARCH ▲/▼ button to select SCREEN.
3) Press VOLUME ▶ or ◀ button to select the desired picture mode.

10. SELECTING THE MENU

You can select the menu to make this unit or AV sources connected to this unit operate in the best conditions.

1) Press MENU button to select the desired menu. Each time you press MENU button, the menu changes as follows.

AV1, AV2, AV3 Mode : CONTROL->FUNCTION-> PICTURE->MENU OFF
TV Mode : CONTROL->TUNING->FUNCTION->PICTURE->MENU OFF

2) Press SEARCH ▲/▼ button to select the item that you want to adjust. The background color of the selected item changes to red.

3) Press VOLUME ▶ or ◀ button to adjust the selected item.

NOTE
The MENU automatically disappears about 8 seconds after it appears on the screen. But if you want to erase it by manual, press MENU button repeatedly until the menu disappears.

FUNCTION

1. FM TRANSMITTER CONTROL

This is to listen to the sound of AV sources connected to this unit with the car speakers. If you set the FM frequency of the FM transmitter in the following way and you have the FM Radio unit in your car, you can listen to the sound of AV sources of this unit.

1) Press MENU button to show FUNCTION menu on the screen. It will show the following menu.

2) Press SEARCH ▲/▼ button to select FM TRANS.
3) Press VOLUME ▶ or ◀ button to select ON/OFF.
   ON : FM Transmitter on
   OFF : FM Transmitter off
4) Press SEARCH UP/DOWN button to select FM FREQ.
5) Press VOLUME ▶ or ◀ button to select the FM frequency. The FM frequency station will change by 100KHz.
6) Tune the car radio's FM Radio to the same FM frequency of the FM Transmitter.

NOTE

The FM frequency range of the FM Transmitter is 89.5 ~ 90.2 MHz.

2. TILT POSITION CONTROL

1) Press MENU button to show FUNCTION on the screen.
2) Press SEARCH ▲/▼ button to select TILT POSITION.
3) Press VOLUME ▶button to swing the LCD panel one step backward.
   Press VOLUME ◀button to swing the LCD panel one step forward.
   The TILT position is +2, +1, 0, -1, -2.

3. MOVE POSITION CONTROL

1) Press MENU button to show FUNCTION on the screen.
2) Press SEARCH ▲/▼ buttons to select MOVE POSITION.
3) Press VOLUME ▶button to move the unit one step forward(50mm). The menu will show the position at 1, 2, 3.
   Press VOLUME ◀button to move the unit one step backward(50mm). The menu will show the position at 2, 1, 0.

CONTROL

1. NAVIGATION AUDIO

When a navigation system is connected to this unit, you can use the navigation system properly after you adjust the navigation audio control. If you press NAVI button on the remote control, the navigation mode will be displayed on the screen on any mode, when you connect the navigation system to this unit, you should connect it through RGB connector at the backside of this unit

NOTE

This is limited to only the unit with RGB connector.

1. Press MENU button to select CONTROL menu, and press SEARCH ▲/▼ button to select NAVI AUDIO.
2. Press VOLUME ◀ or ▶ button to change the navigation audio as follows.

   OFF -> ON -> AUTO

OFF : When a navigation system is not connected, the NAVI AUDIO should be set to OFF.

ON : When a navigation system is connected to this unit through RGB connector, the NAVI AUDIO should be set to ON or AUTO.
When the NAVI AUDIO is set to ON on the navigation mode, only the navigation audio is heard through the speakers.

AUTO : When the NAVI AUDIO is set to AUTO on the navigation mode, the previous mode audio (TV) is heard through the speakers, when the navigation audio comes on, the previous mode audio is muted and the navigation audio is heard through the speakers.

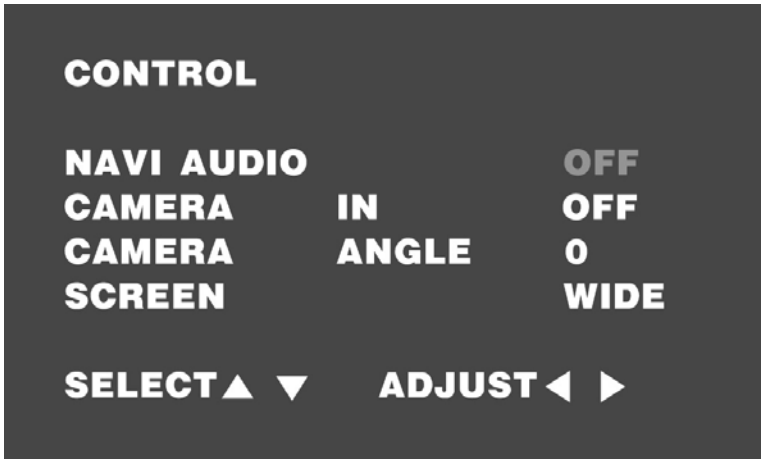

2. WATCHING NAVIGATION

Press NAVI button on the remote control in order to watch the navigation.

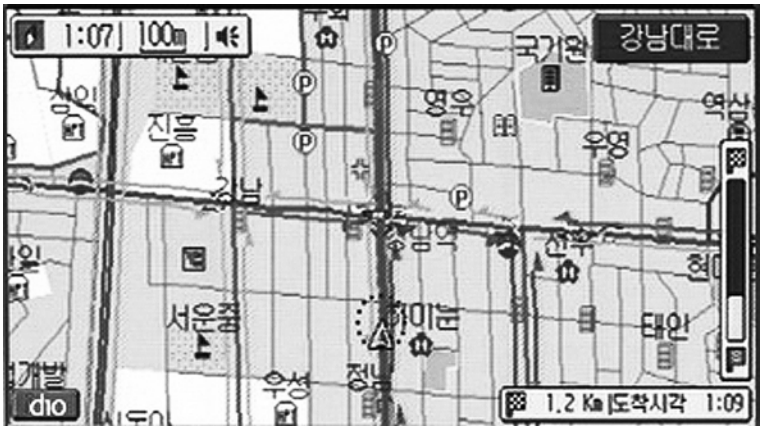

NOTE

When the rear view camera is connected to this unit and you put the gear lever to R(Reverse Gear), the rear view will be displayed on the screen even if the monitor is on Navigation mode.

3. SETTING THE CAMERA IN

When a rear view camera is connected to this unit, you can adjust CAMERA IN CONTROL. If you put the gear lever to R(Reverse) to move your car backward, the rear view camera video will be displayed on the screen on any mode. When you connect the rear view camera to this unit, connect a rear view camera video output only to AV1, 2 or 3 video input terminals at the rear of this unit.

1) Press MENU button to show CONTROL menu on the screen.
2) Press SEARCH ▲/▼ button to select CAMERA IN.
3) Press VOLUME ◀ or ▶ button to select AV1, AV2 or AV3 mode which rear view camera is connected. Each time you press this button, CAMERA IN changes as follows.

AV 1 -> AV 2 -> AV 3 -> OFF

4. WATCHING THE REAR VIEW

Put the gear lever to R(Reverse) on any mode. The monitor will show the rear view camera picture.

5. WIRING CONNECTION

Connect orange color connection wire with a “REVERSE GEAR” sticker to a switched power output terminal of the R (Reverse) gear.
See BASIC CONNECTION Part.

NOTE
If you select AV mode connected to the rear view Camera with MODE button, the monitor does not show the rear view camera picture. The monitor will show only the WARNING picture.

6. CAMERA ANGLE CONTROL

You should use the car-use rear view camera only, if not the rear view can be displayed with mirror looking image. Then, you can adjust the image looking correctly as follows.

1) Press MENU button to show CONTROL on the screen.
2) Press SEARCH ▲/▼ button to select CAMERA ANGLE.
3) Press VOLUME ◀ or ▶ button to change CAMERA ANGLE.
   Each time you press this button, CAMERA ANGLE will be changed as follows.
   0 -> 180
   180 : When the image is mirror looking image, you should set the CAMERA ANGLE to 180 in order to watch the rear view with the right looking image.

7. SCREEN ASPECT CONTROL

1) Press MENU button to show CONTROL on the screen.
2) Press SEARCH ▲/▼ button to select SCREEN.
3) Press VOLUME ◀ or ▶ button to change SCREEN aspect.
   Each time you press this button, SCREEN will be changed as follows.
   NORMAL -> WIDE -> FULL
   Refer to the 9. ADJUSTING VIDEO PICTURE MODE of BASIC OPERATION.

PICTURE

1. CONTRAST CONTROL

1) Press MENU button to show PICTURE on the screen.
2) Press SEARCH ▲/▼ button to select CONTRAST.
3) Press VOLUME ▶ or ◀ button to change the CONTRAST.
   VOLUME ▶ : CONTRAST level will be increased.
   VOLUME ◀ : CONTRAST level will be decreased.
   CONTRAST level is from 0 to 30.

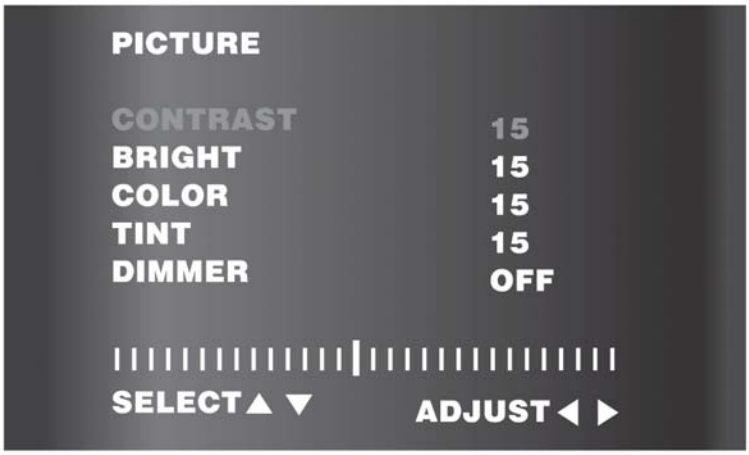

2. BRIGHT CONTROL

1) Press MENU button to show PICTURE on the screen.
2) Press SEARCH ▲/▼ button to select BRIGHT.
3) Press VOLUME ▶ or ◀ button to change the BRIGHT.
   VOLUME ▶ : BRIGHT level will be increased and the screen will be brighter.
   VOLUME ◀ : BRIGHT level will be decreased and the screen will be darker.
   BRIGHT level is from 0 to 30.

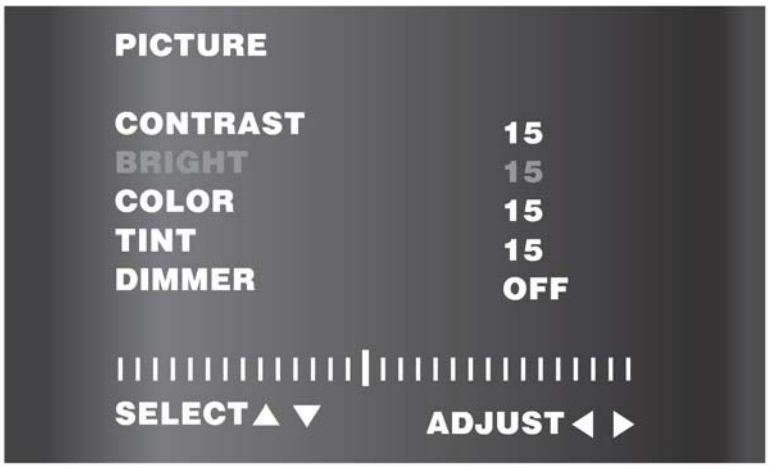

3. COLOR CONTROL

1) Press MENU button to show PICTURE on the screen.
2) Press SEARCH ▲/▼ button to select COLOR.
3) Press VOLUME ▶ or ◀ button to change the COLOR.
   VOLUME ▶ : COLOR level will be increased and the COLOR will be richer.
   VOLUME ◀ : COLOR level will be decreased and the COLOR will be lighter.
   COLOR level is from 0 to 30.

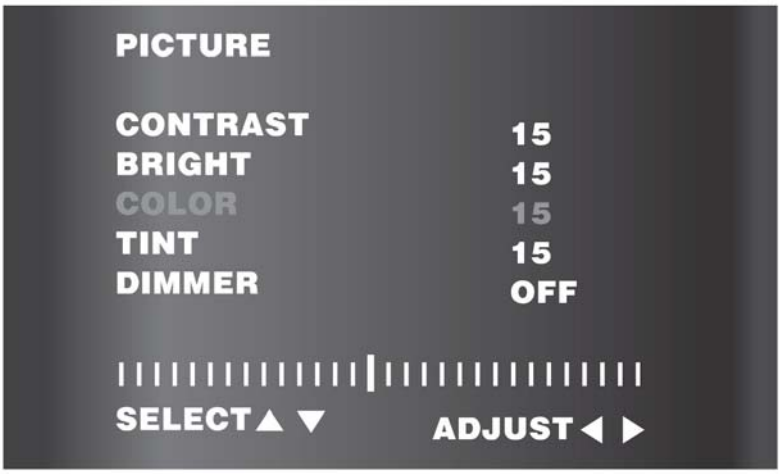

4. TINT CONTROL

1) Press MENU button to show PICTURE on the screen.
2) Press SEARCH ▲/▼ button to select TINT.
3) Press VOLUME ▶ or ◀ button to change the TINT.
   VOLUME ▶ : Red color on the screen will be richer.
   VOLUME ◀ : Green color on the screen will be richer.

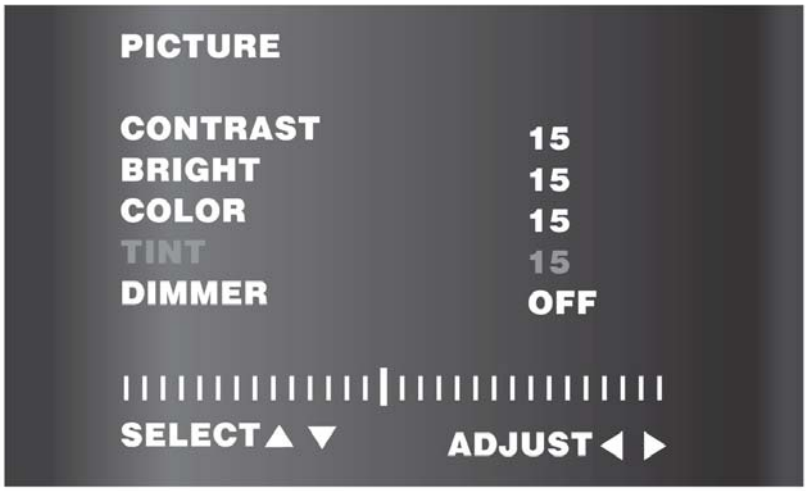

5. DIMMER CONTROL

1) Press MENU button to show PICTURE on the screen.
2) Press SEARCH ▲/▼ button to select DIMMER.
3) Press VOLUME ▶ or ◀ button to change the DIMMER ON or OFF.

ON : When this unit is set to on. The brightness of this unit will be changed depending on the brightness of the environment.

OFF : When you do not need the DIMMER.

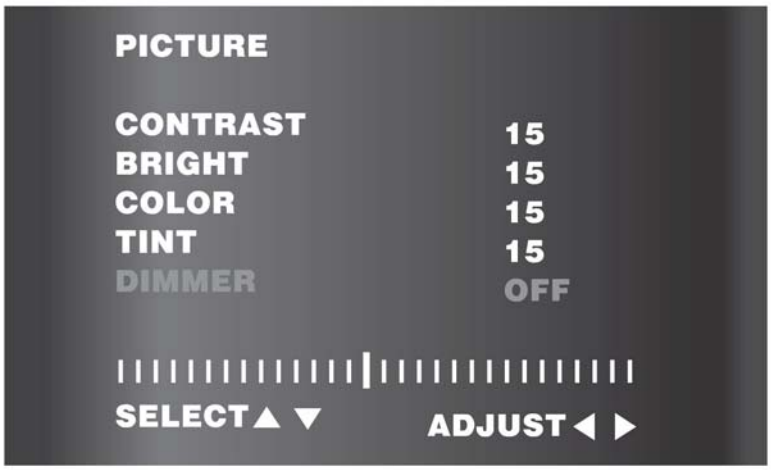

WATCHING TV

<WARNING>

You cannot control this unit while driving for your safety. You should control this unit after you park your car in a safe place and pull the parking brake up.

1. MENU CONTROL

1) Press MENU button to show MENU on the screen on TV mode.
2) Each time you press MENU button, the MENU changes as follows.
CONTROL->TUNING->FUNCTION->PICTURE->MENU OFF
3) Press MENU button repeatedly after you adjust the MENU, and the MENU on the screen will be disappeared, or the MENU will disappear after 8 seconds if you do not do any function on the unit.

NOTE

TUNING menu is on TV mode only.

2. CHANNEL CONTROL

1) Press MENU button to show TUNING on the screen.
2) Press SEARCH ▲/▼ button to select CHANNEL.
3) Press VOLUME ▶ or ◀ button to change the memorized channel.
VOLUME ◀ : The channel will be changed to lower memorized channel.
VOLUME ▶ : The channel will be changed to upper memorized channel.

NOTE

The color of memorized channel is GREEN and the color of non-memorized channel is RED.

3. FINE TUNING CONTROL

1) Press MENU button to show TUNING on the screen.
2) Press SEARCH ▲/▼ button to select FINE.
3) Press VOLUME ▶ or ◀ button to do the FINE TUNING.
   VOLUME ◀ : The center frequency level of the channel will be decreased.
   VOLUME ▶ : The center frequency level of the channel will be increased.
   FINE TUNING frequency range is from –32 to +32.

4. AUTO MEMORY

1) Press MENU button to show TUNING on the screen.
2) Press SEARCH ▲/▼ button to select AUTO MEMORY.
3) Press VOLUME ◄ or ►, and then, the unit will memorize the channels automatically.

NOTE

You can store the channels automatically by pressing AS/ATM button on the remote control.

5. CHANNEL SEARCH

1) MANUAL SEARCH
MANUAL ▲ : The channel will move up to the next channel.
MANUAL ▼ : The channel will move down to the next channel.
2) DIRECT SEARCH
You can tune to the channel directly by using numeric buttons.
(For an example)
CHANNEL 6 : You press 0 & 6 or press 6.
CHANNEL 28 : You press 2 & 8.
3) PRESET CHANNEL SEARCH

SEARCH ▲ : The channel will move up to the next memorized channe
SEARCH ▼ : The channel will move down to the next memorized char

4) CHANNEL MANUAL MEMORY, DELETE

MEMORY

(A) Go to the channel which you want to memorize.
(B) Press memory button on the remote control. The channel will be memorized.

DELETE

(A) Go to the memorized channel which you want to delete.
(B) Press delete button on the remote control. The channel will be deleted.

WARNING SCREEN

The monitor shows the following warning picture when the parking brake is not pulled or while driving to prevent traffic accident that may happen while watching the screen. The monitor shows the warning picture only and does not show any other picture, but you can enjoy the sound only.

INSTALLATION

PRECAUTIONS

Choose the mounting location carefully so that the unit will not interfere with the normal driving functions of the driver. Avoid installing the unit where it would be subject to high temperatures, such as from direct sunlight or hot air from the heater, or where it would be subject to dust, dirt or excessive vibration. Use only the supplied mounting hardware for a safe and secure installation.

MOUNTING ANGLE ADJUSTMENT

Adjust the mounting angle to less than 20°.

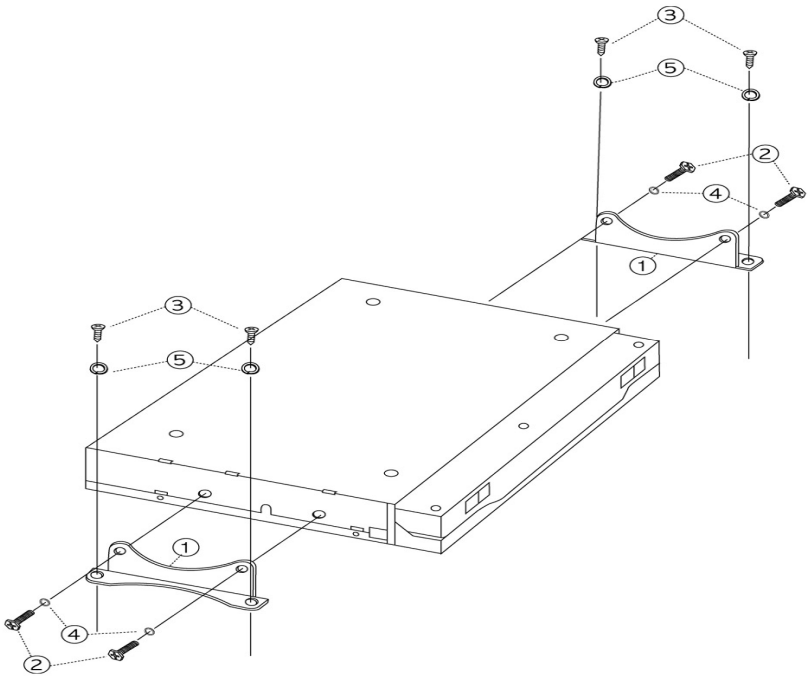

SUPPLIED MOUNTING KIT

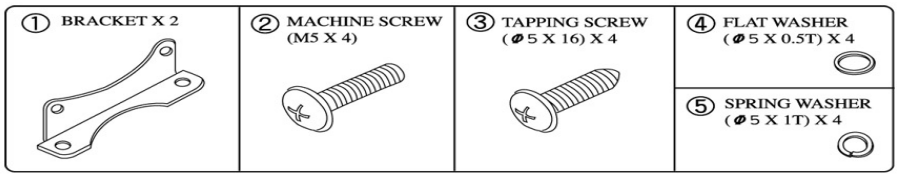

BASIC CONNECTION

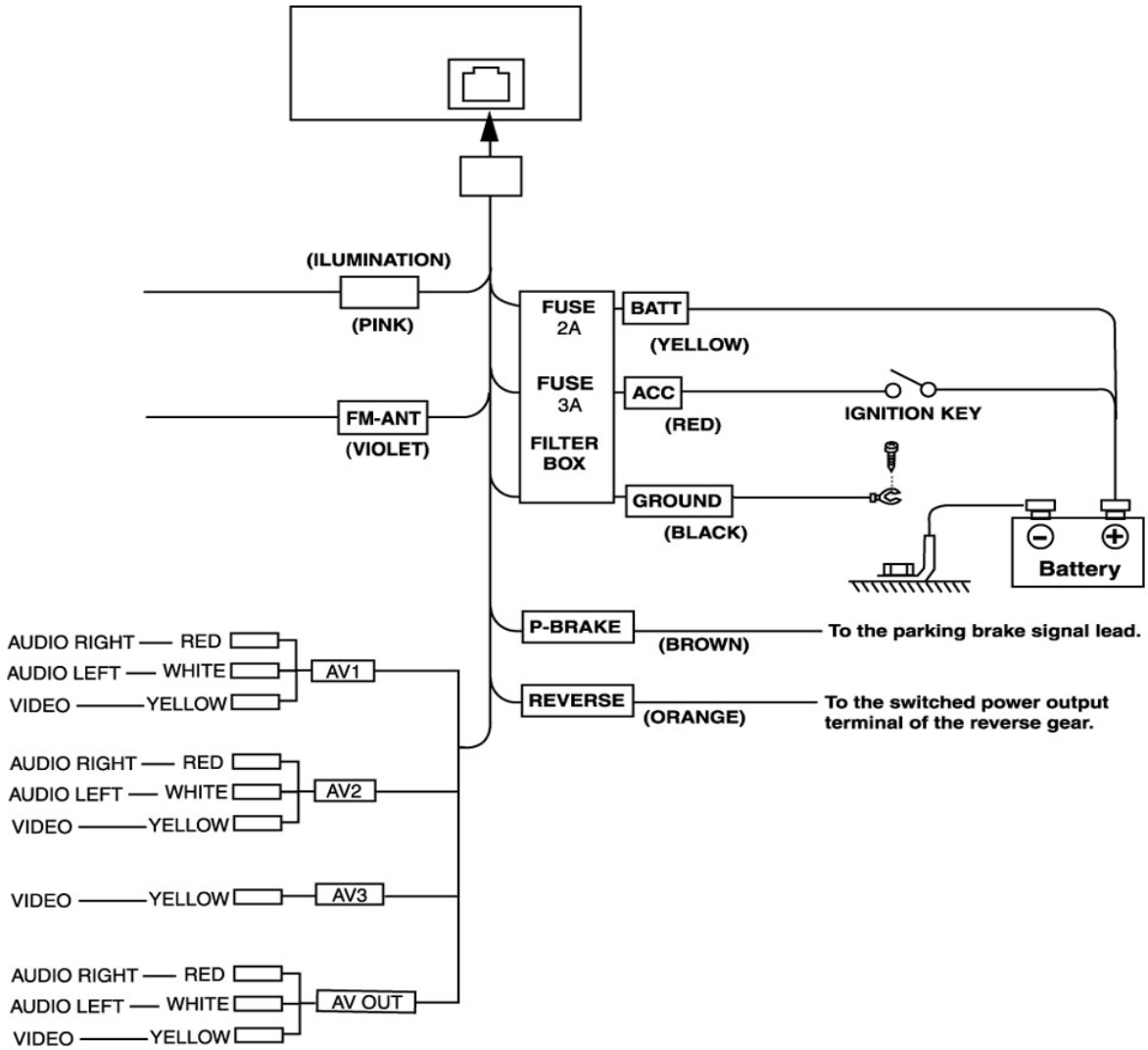

NOTE 1. Be sure that the PARKING SENSOR WIRE must be grounded or opened. If it is connected to ACC(B+). The unit can be damaged.

2. Do not ground the POWER ANTENNA wire or REMOTE TURN ON wire. If it is grounded, the unit can be damaged.

CONNECTING TO AV SOURCES

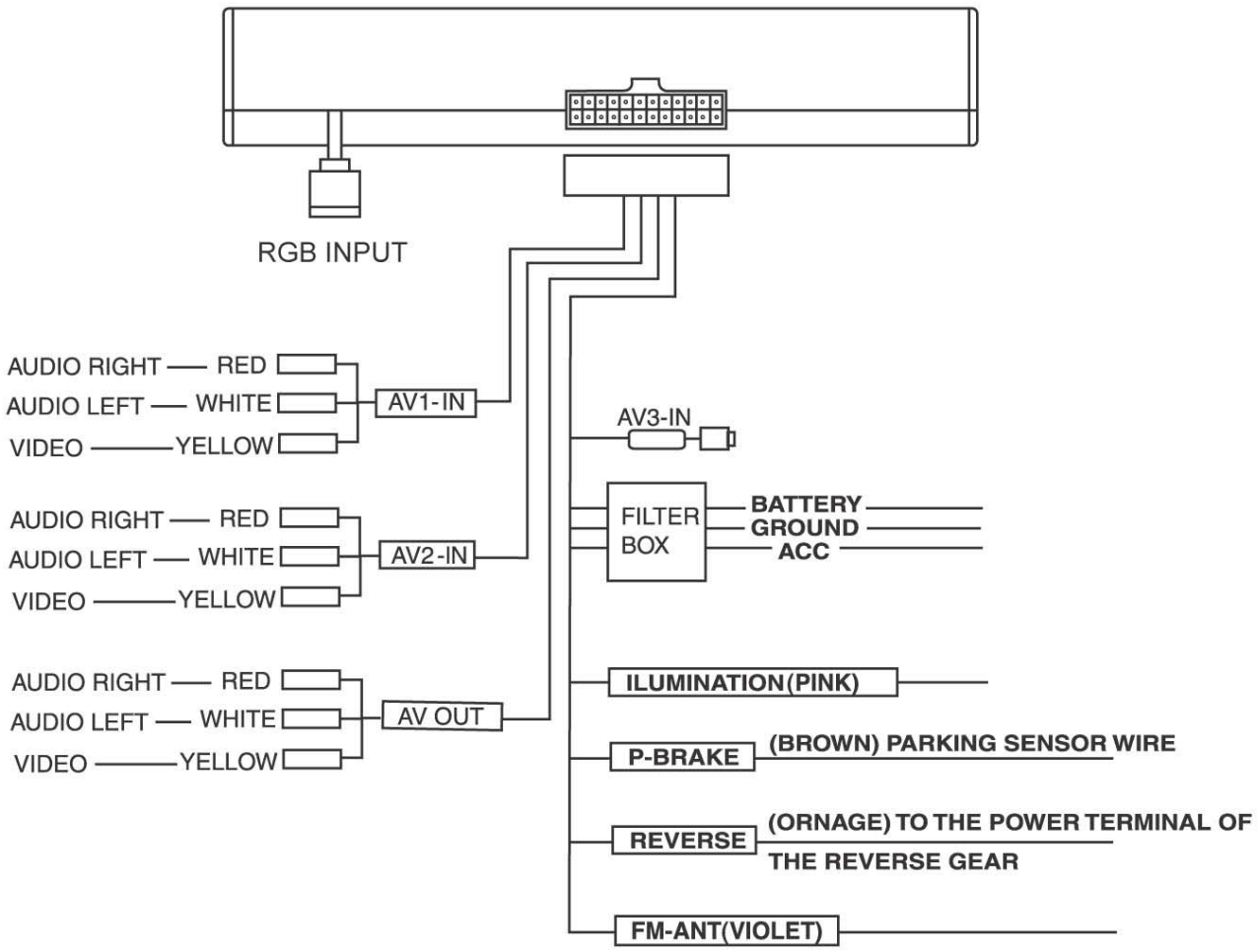

SPECIFICATIONS

General

Power Supply	DC 14.4V(11V-15V)
Power Consumption	1.5A
Operating Temperature	-10 degree~ 60 degree
Audio Input Sensitivity	1.0V/22K Ohm
Audio Output Voltage	0.5V/1K Ohm
Video Input Signal	1.0Vpp/75 Ohm
Video Output Signal	1.0Vpp/75 Ohm
Dimensions	178(W) x 25(H) x 160(D)mm
Polarity	Negative Ground only
Fuses	2A(Back Up) 3A(ACC)
Weight Net	1.5Kg
Gross	2.2Kg

Monitor Section

Screen Size	7 Inch Wide
LCD Type	Transparent Type TN LCD
LCD Drive System	TFT Active Matrix
Number of Pixels	336,960(1,440 X 234)
Effective Pixels	99% or more
Back Lighting	U-shaped cold cathode Fluorescent Tube
Color System	NTSC ONLY

FM Transmitter

Frequency	89.5 MHz ~ 90.2 MHz

TV Section

Receiving Channel	VHF LOW (S3-NZ1)
	VHF HIGH (E12 – E5)
	UHF (E69 – E21)

Specifications are subject to be changed without notice.

TROUBLE SHOOTING

GENERAL	Problem	Cause	Measure
	Power does not turn on. (No sound is produced.)	Fuse is blown	Replace with a fuse of the same amperage. If the fuse blow again, consult installation shop where you purchased it from.
		Incorrect wiring	Consult installation shop where you purchased it from.
	Nothing happens when buttons are pressed. Display is not accurate.	The microprocessor has malfunctioned due to noise, etc.	Power it off and power it on again. If it is not working, consult installation shop where you purchased it from.
	The remote controller does not work.	Direct rays of the sun fall on the light-receptive part of the remote controller.	When direct rays of the sun fall on the light-receptive part of the remote controller, it may not work.
		The batteries of the remote controller unit are dead or there is no battery in the remote controller unit.	Check the batteries of the remote controller unit.
MONITOR	The image is not displayed.	The parking brake is not pulled or the parking brake wire is not connected.	Check that the parking brake is applied
	The display is dark.	The brightness control is too low.	Adjust the brightness properly.
		- The operating condition is not good.	The temperature inside the vehicle may be 0 degree or less. Set to an appropriate temperature (25 degree or so) and check it again.
		The headlight of the vehicle is lit.	The display is made dark at night to prevent the glare (When the headlight of the vehicle is lit in the daytime, the display gets dark).

	The color of the display is light or a shade of color is not good .	The color is not adjusted adequately.	Check that Color and Tint are adjusted properly.
TV	The image gets unclear.	Bad receiving condition.	A radio wave may not reach sufficiently due to obstruction of mountains or buildings. Check it again at a place where a radio wave can be received properly.
	Screen has a double or triple image.	Bad receiving condition	It may be under the influence of radio wave reflected by mountains or buildings. Check it again after changing place or direction.
	Screen has spots or stripes in the image.	Presence of jamming	It may be under the influence from automobiles, streetcar, power cable, neon sign, and so forth. Check it again after changing place.
	There are red, green, and blue points in the display.		This is not a failure, but a phenomenon peculiar to a liquid crystal panel (The LCD panel is produced according to technology with very high precision. Note that, though there are effective pixels of 99.99% or more, pixel missing or normally lit pixels account for 0.01%)