Date/Time: 4/29/2005 11:23:07 AM

Test Laboratory: Compliance Certification Services Inc.

D2450V2-SN 728-Head

DUT: Dipole 2450 MHz; Type: D2450V2; Serial: D2450V2 - SN:728

Communication System: CW2450; Frequency: 2450 MHz;Duty Cycle: 1:1
Medium parameters used: f = 2450 MHz; σ = 1.84 mho/m; ε_r = 37.5; ρ = 1000 kg/m^3
Air Temperature:24.8 deg C;Liquid Temperature:23.6 deg C
Area scan setting: Find secondary maxima within 2 dB, and with a peak SAR value greater than 0.0012 mW/g
Zoom scan setting: Maximum number of cubes to measure is 2
Phantom section: Flat Section

DASY4 Configuration:

- Probe: EX3DV4 - SN3554; ConvF(6.2, 6.2, 6.2); Calibrated: 11/19/2004
- Sensor-Surface: 4mm (Mechanical Surface Detection)Sensor-Surface: 0mm (Fix Surface)
- Electronics: DAE3 Sn558; Calibrated: 8/24/2004
- Phantom: SAM 34; Type: SAM V4.0; Serial: TP-1150
- Measurement SW: DASY4, V4.5 Build 19; Postprocessing SW: SEMCAD, V1.8 Build 146

Pin=250mW,d=10mm/Area Scan (6x6x1): Measurement grid: dx=15mm, dy=15mm
Maximum value of SAR (measured) = 8.92 mW/g

Pin=250mW,d=10mm/Z Scan (1x1x21): Measurement grid: dx=20mm, dy=20mm, dz=5mm
Maximum value of SAR (measured) = 20.7 mW/g

Pin=250mW,d=10mm/Zoom Scan (5x5x7)/Cube 0: Measurement grid: dx=7.5mm, dy=7.5mm, dz=5mm
Reference Value = 89.1 V/m; Power Drift = 0.123 dB
Peak SAR (extrapolated) = 29.1 W/kg
SAR(1 g) = 14.0 mW/g; SAR(10 g) = 5.91 mW/g
Maximum value of SAR (measured) = 14.3 mW/g

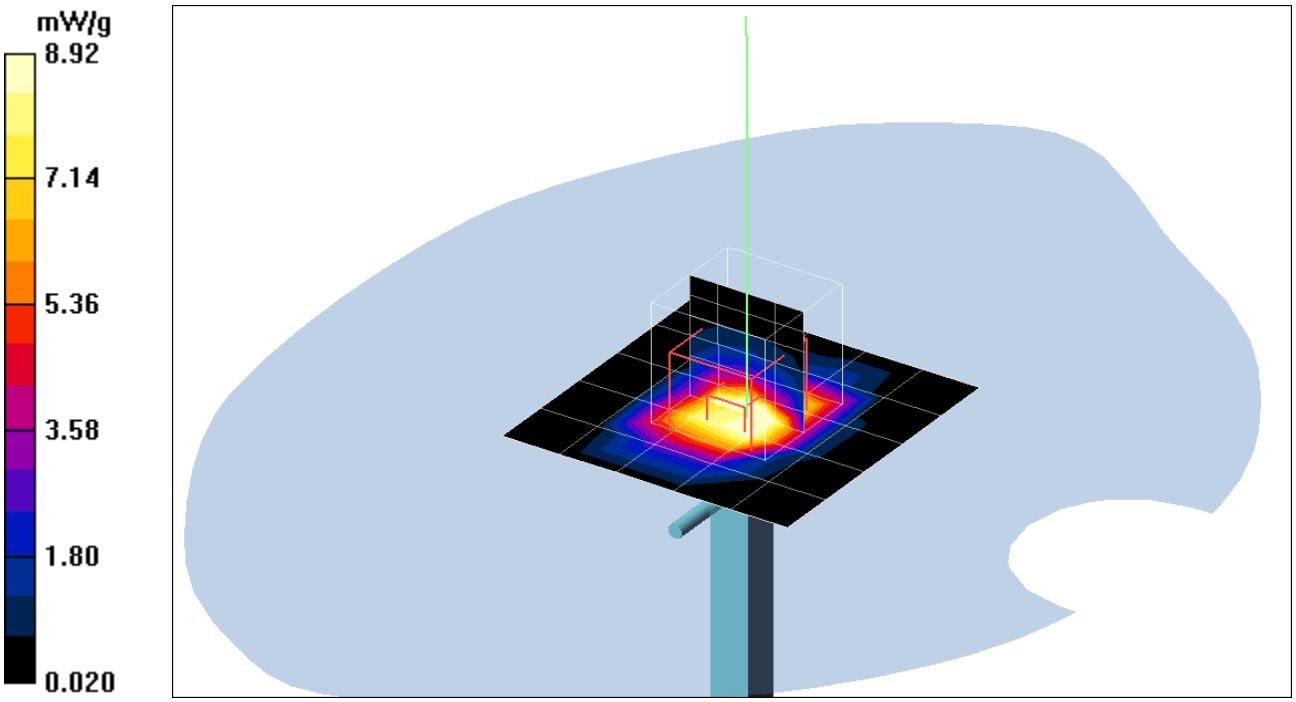
mW/g
8.92
7.14
5.36
3.58
1.80
0.020

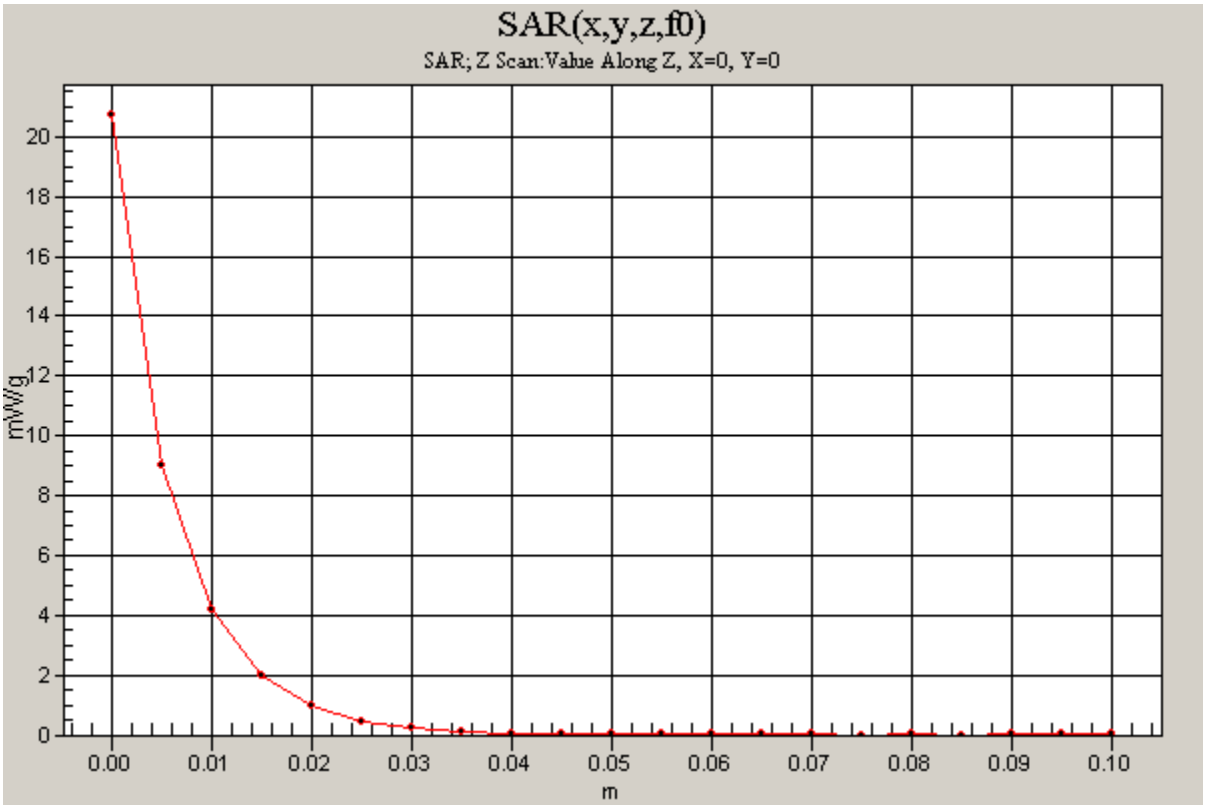
SAR(x,y,z,f0)
SAR; Z Scan:Value Along Z, X=0, Y=0
mW/g
0
2
4
6
8
10
12
14
16
18
20
0.00
0.01
0.02
0.03
0.04
0.05
0.06
0.07
0.08
0.09
0.10
m

Date/Time: 5/4/2005 10:35:31 AM

Test Laboratory: Compliance Certification Services Inc.

D2450V2-SN 728-Body

DUT: Dipole 2450 MHz; Type: D2450V2; Serial: D2450V2 - SN:728

Communication System: CW2450; Frequency: 2450 MHz;Duty Cycle: 1:1
Medium parameters used: f = 2450 MHz; σ = 1.91 mho/m; ε_r = 51.1; ρ = 1000 kg/m^3
Air Temperature:25.5 deg C;Liquid Temperature:24.3 deg C
Area scan setting: Find secondary maxima within 2 dB, and with a peak SAR value greater than 0.0012 mW/g
Zoom scan setting: Maximum number of cubes to measure is 2
Phantom section: Flat Section

DASY4 Configuration:

- Probe: EX3DV4 - SN3554; ConvF(6.14, 6.14, 6.14); Calibrated: 11/19/2004
- Sensor-Surface: 4mm (Mechanical Surface Detection)Sensor-Surface: 0mm (Fix Surface)
- Electronics: DAE3 Sn558; Calibrated: 8/24/2004
- Phantom: SAM 34; Type: SAM V4.0; Serial: TP-1150
- Measurement SW: DASY4, V4.5 Build 19; Postprocessing SW: SEMCAD, V1.8 Build 146

Pin=250mW,d=10mm/Area Scan (6x6x1): Measurement grid: dx=15mm, dy=15mm
Maximum value of SAR (measured) = 9.37 mW/g

Pin=250mW,d=10mm/Z Scan (1x1x21): Measurement grid: dx=20mm, dy=20mm, dz=5mm
Maximum value of SAR (measured) = 21.2 mW/g

Pin=250mW,d=10mm/Zoom Scan (5x5x7)/Cube 0: Measurement grid: dx=7.5mm, dy=7.5mm, dz=5mm
Reference Value = 87.8 V/m; Power Drift = 0.079 dB
Peak SAR (extrapolated) = 30.0 W/kg
SAR(1 g) = 13.1 mW/g; SAR(10 g) = 5.74 mW/g
Maximum value of SAR (measured) = 14.9 mW/g

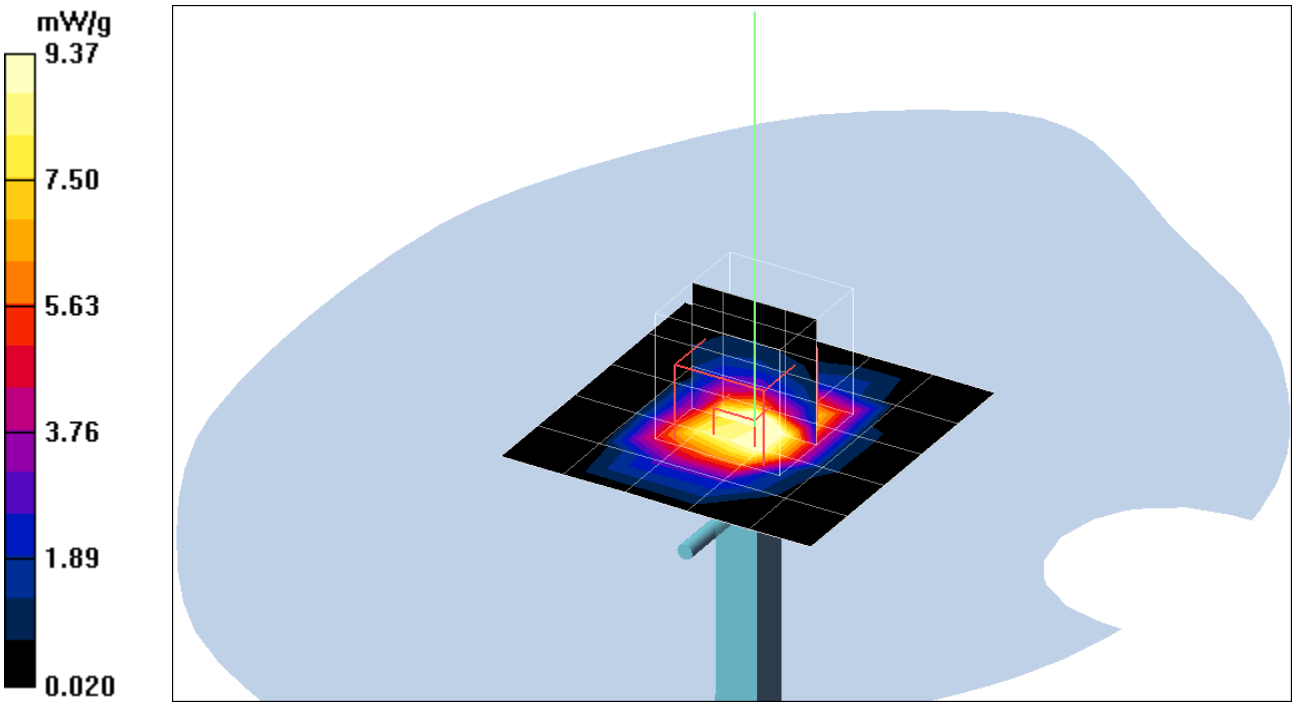
mW/g
9.37
7.50
5.63
3.76
1.89
0.020

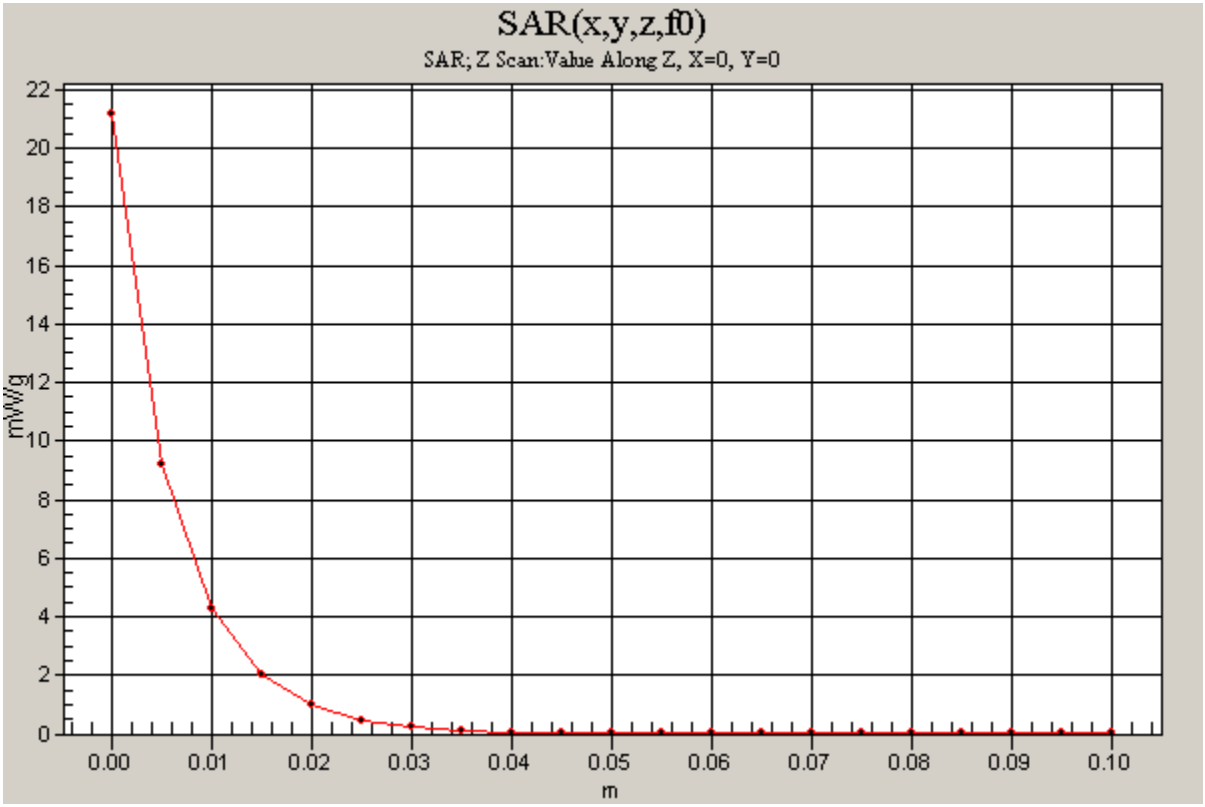
SAR(x,y,z,f0)
SAR; Z Scan:Value Along Z, X=0, Y=0
mW/g
m
0
2
4
6
8
10
12
14
16
18
20
22
0.00
0.01
0.02
0.03
0.04
0.05
0.06
0.07
0.08
0.09
0.10

Date/Time: 4/29/2005 12:43:15 PM

Test Laboratory: Compliance Certification Services Inc.

Left Head

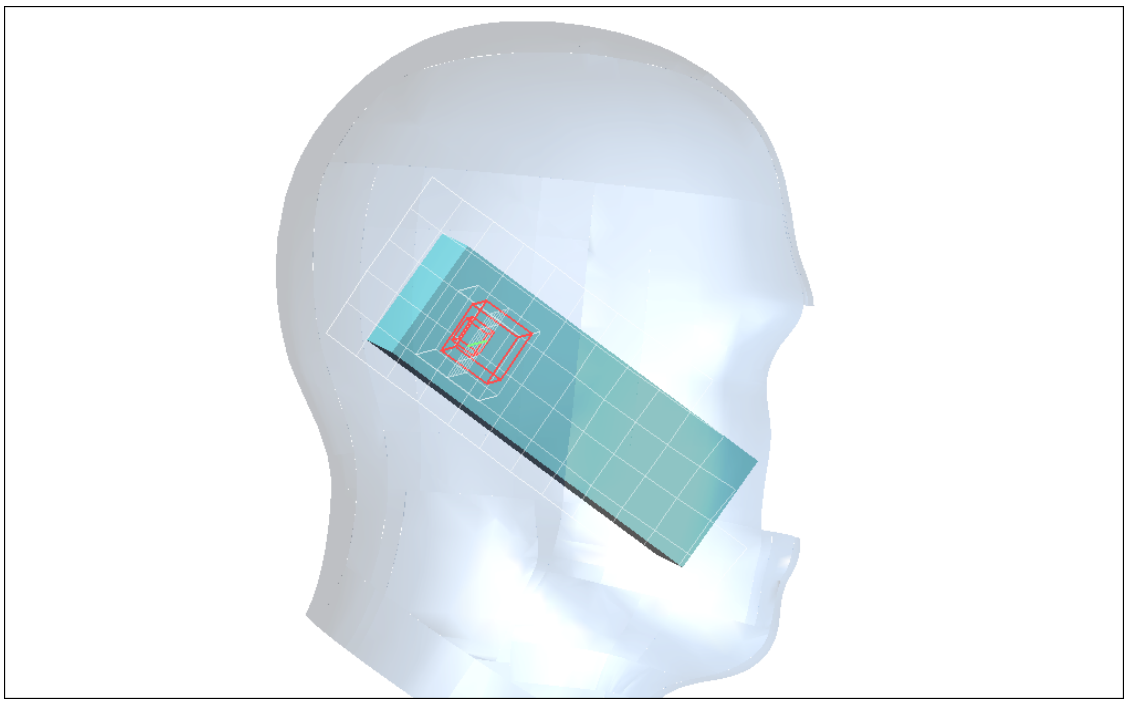

Date/Time: 4/29/2005 5:32:31 PM

Test Laboratory: Compliance Certification Services Inc.

2.4G Left Head

DUT: WDCT45-A2; Type: 2.4GHz WDCT Color Display; Serial: N/A

Communication System: 2.4G ; Frequency: 2402 MHz;Duty Cycle: 1:11.9
Medium parameters used: f = 2402 MHz; σ = 1.84 mho/m; ε_r = 37.5; ρ = 1000 kg/m^3
Air Temperature:24.8 deg C;Liquid Temperature:23.6 deg C
Area scan setting: Find secondary maxima within 2 dB, and with a peak SAR value greater than 0.0012 mW/g
Zoom scan setting: Maximum number of cubes to measure is 2
Phantom section: Left Section

DASY4 Configuration:

- Probe: EX3DV4 - SN3554; ConvF(6.2, 6.2, 6.2); Calibrated: 11/19/2004
- Sensor-Surface: 4mm (Mechanical Surface Detection)
- Electronics: DAE3 Sn558; Calibrated: 8/24/2004
- Phantom: SAM 12; Type: SAM V4.0; Serial: TP-1150
- Measurement SW: DASY4, V4.5 Build 19; Postprocessing SW: SEMCAD, V1.8 Build 146

Left Cheek Low CH01/Area Scan (6x13x1): Measurement grid: dx=15mm, dy=15mm
Maximum value of SAR (measured) = 0.026 mW/g

Left Cheek Low CH01/Zoom Scan (5x5x7)/Cube 0: Measurement grid: dx=7.5mm, dy=7.5mm, dz=5mm
Reference Value = 3.78 V/m; Power Drift = -0.149 dB
Peak SAR (extrapolated) = 0.037 W/kg
SAR(1 g) = 0.0242 mW/g; SAR(10 g) = 0.012 mW/g
Maximum value of SAR (measured) = 0.028 mW/g

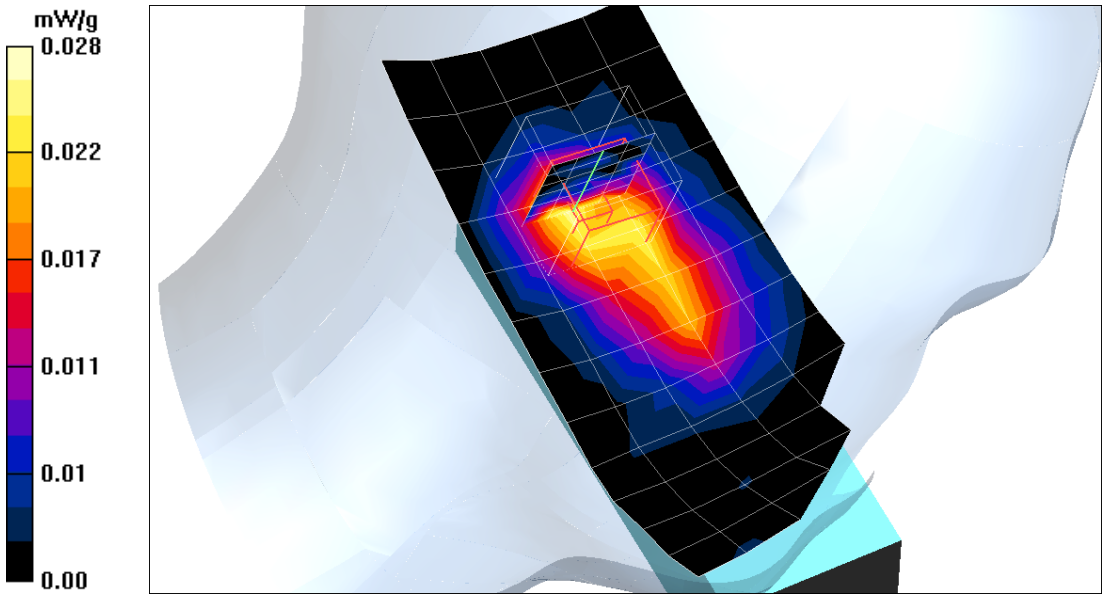

Date/Time: 4/29/2005 11:57:18 AM

Test Laboratory: Compliance Certification Services Inc.

2.4G Left Head

DUT: WDCT45-A2; Type: 2.4GHz WDCT Color Display; Serial: N/A

Communication System: 2.4G ; Frequency: 2441 MHz;Duty Cycle: 1:11.9
Medium parameters used: f = 2441 MHz; σ = 1.84 mho/m; ε_r = 37.5; ρ = 1000 kg/m^3
Air Temperature:24.8 deg C;Liquid Temperature:23.6 deg C
Area scan setting: Find secondary maxima within 2 dB, and with a peak SAR value greater than 0.0012 mW/g
Zoom scan setting: Maximum number of cubes to measure is 2
Phantom section: Left Section

DASY4 Configuration:

- Probe: EX3DV4 - SN3554; ConvF(6.2, 6.2, 6.2); Calibrated: 11/19/2004
- Sensor-Surface: 4mm (Mechanical Surface Detection)
- Electronics: DAE3 Sn558; Calibrated: 8/24/2004
- Phantom: SAM 12; Type: SAM V4.0; Serial: TP-1150
- Measurement SW: DASY4, V4.5 Build 19; Postprocessing SW: SEMCAD, V1.8 Build 146

Left Cheek Middle CH46/Area Scan (6x13x1): Measurement grid: dx=15mm, dy=15mm
Maximum value of SAR (measured) = 0.033 mW/g

Left Cheek Middle CH46/Zoom Scan (5x5x7)/Cube 0: Measurement grid: dx=7.5mm, dy=7.5mm, dz=5mm
Reference Value = 4.31 V/m; Power Drift = 0.065 dB
Peak SAR (extrapolated) = 0.062 W/kg
SAR(1 g) = 0.0329 mW/g; SAR(10 g) = 0.015 mW/g
Maximum value of SAR (measured) = 0.053 mW/g

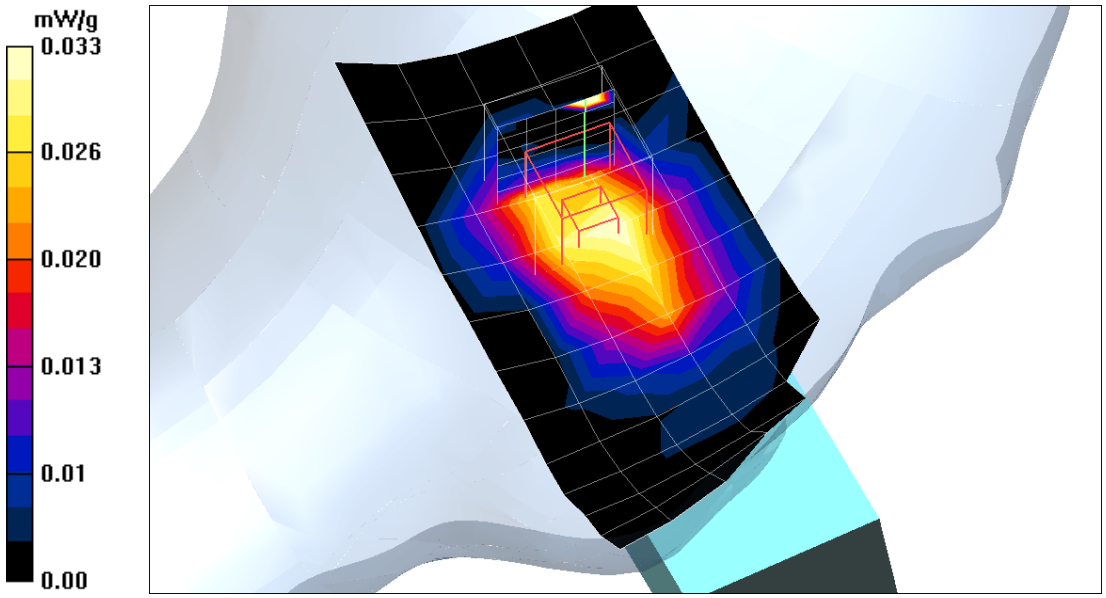

Date/Time: 4/29/2005 12:25:45 PM

Test Laboratory: Compliance Certification Services Inc.

2.4G Left Head

DUT: WDCT45-A2; Type: 2.4GHz WDCT Color Display; Serial: N/A

Communication System: 2.4G ; Frequency: 2480 MHz;Duty Cycle: 1:11.9
Medium parameters used: f = 2480 MHz; σ = 1.84 mho/m; ε_r = 37.5; ρ = 1000 kg/m^3
Air Temperature:24.8 deg C;Liquid Temperature:23.6 deg C
Area scan setting: Find secondary maxima within 2 dB, and with a peak SAR value greater than 0.0012 mW/g
Zoom scan setting: Maximum number of cubes to measure is 2
Phantom section: Left Section

DASY4 Configuration:

- Probe: EX3DV4 - SN3554; ConvF(6.2, 6.2, 6.2); Calibrated: 11/19/2004
- Sensor-Surface: 4mm (Mechanical Surface Detection)
- Electronics: DAE3 Sn558; Calibrated: 8/24/2004
- Phantom: SAM 12; Type: SAM V4.0; Serial: TP-1150
- Measurement SW: DASY4, V4.5 Build 19; Postprocessing SW: SEMCAD, V1.8 Build 146

Left Cheek High CH92/Area Scan (6x13x1): Measurement grid: dx=15mm, dy=15mm
Maximum value of SAR (measured) = 0.034 mW/g

Left Cheek High CH92/Zoom Scan (5x5x7)/Cube 0: Measurement grid: dx=7.5mm, dy=7.5mm, dz=5mm
Reference Value = 4.09 V/m; Power Drift = 0.2 dB
Peak SAR (extrapolated) = 0.060 W/kg
SAR(1 g) = 0.0316 mW/g; SAR(10 g) = 0.015 mW/g
Maximum value of SAR (measured) = 0.035 mW/g

Left Cheek High CH92/Zoom Scan (5x5x7)/Cube 1: Measurement grid: dx=7.5mm, dy=7.5mm, dz=5mm
Reference Value = 4.09 V/m; Power Drift = 0.2 dB
Peak SAR (extrapolated) = 0.088 W/kg
SAR(1 g) = 0.0251 mW/g; SAR(10 g) = 0.013 mW/g
Maximum value of SAR (measured) = 0.031 mW/g

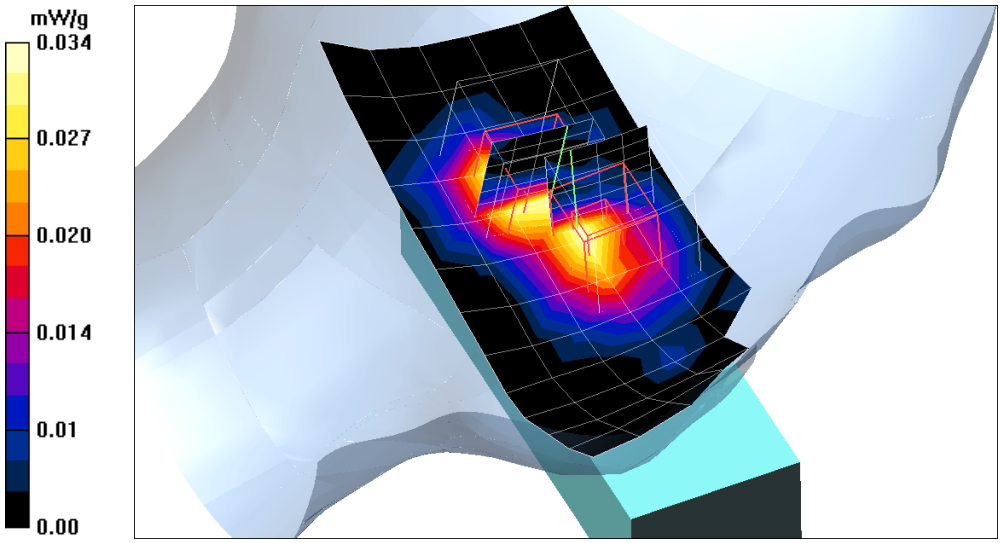

Date/Time: 4/29/2005 1:29:07 PM

Test Laboratory: Compliance Certification Services Inc.

2.4G Left Head

DUT: WDCT45-A2; Type: 2.4GHz WDCT Color Display; Serial: N/A

Communication System: 2.4G ; Frequency: 2402 MHz;Duty Cycle: 1:11.9
Medium parameters used: f = 2402 MHz; σ = 1.84 mho/m; ε_r = 37.5; ρ = 1000 kg/m^3
Air Temperature:24.8 deg C;Liquid Temperature:23.6 deg C
Area scan setting: Find secondary maxima within 2 dB, and with a peak SAR value greater than 0.0012 mW/g
Zoom scan setting: Maximum number of cubes to measure is 2
Phantom section: Left Section

DASY4 Configuration:

- Probe: EX3DV4 - SN3554; ConvF(6.2, 6.2, 6.2); Calibrated: 11/19/2004
- Sensor-Surface: 4mm (Mechanical Surface Detection)
- Electronics: DAE3 Sn558; Calibrated: 8/24/2004
- Phantom: SAM 12; Type: SAM V4.0; Serial: TP-1150
- Measurement SW: DASY4, V4.5 Build 19; Postprocessing SW: SEMCAD, V1.8 Build 146

Left Tilted Low CH01/Area Scan (6x13x1): Measurement grid: dx=15mm, dy=15mm
Maximum value of SAR (measured) = 0.025 mW/g

Left Tilted Low CH01/Zoom Scan (5x5x7)/Cube 0: Measurement grid: dx=7.5mm, dy=7.5mm, dz=5mm
Reference Value = 4.18 V/m; Power Drift = -0.20 dB
Peak SAR (extrapolated) = 0.075 W/kg
SAR(1 g) = 0.0293 mW/g; SAR(10 g) = 0.013 mW/g
Maximum value of SAR (measured) = 0.031 mW/g

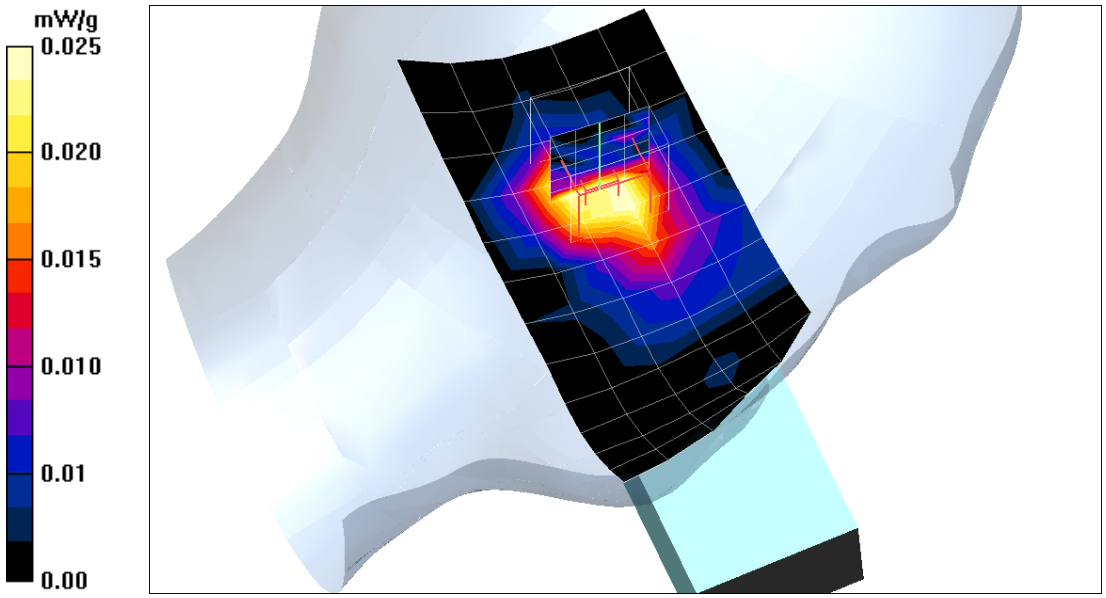

Date/Time: 4/29/2005 1:10:24 PM

Test Laboratory: Compliance Certification Services Inc.

2.4G Left Head

DUT: WDCT45-A2; Type: 2.4GHz WDCT Color Display; Serial: N/A

Communication System: 2.4G ; Frequency: 2441 MHz;Duty Cycle: 1:11.9
Medium parameters used: f = 2441 MHz; σ = 1.84 mho/m; ε_r = 37.5; ρ = 1000 kg/m^3
Air Temperature:24.8 deg C;Liquid Temperature:23.6 deg C
Area scan setting: Find secondary maxima within 2 dB, and with a peak SAR value greater than 0.0012 mW/g
Zoom scan setting: Maximum number of cubes to measure is 2
Phantom section: Left Section

DASY4 Configuration:

- Probe: EX3DV4 - SN3554; ConvF(6.2, 6.2, 6.2); Calibrated: 11/19/2004
- Sensor-Surface: 4mm (Mechanical Surface Detection)
- Electronics: DAE3 Sn558; Calibrated: 8/24/2004
- Phantom: SAM 12; Type: SAM V4.0; Serial: TP-1150
- Measurement SW: DASY4, V4.5 Build 19; Postprocessing SW: SEMCAD, V1.8 Build 146

Left Tilted Middle CH46/Area Scan (6x13x1): Measurement grid: dx=15mm, dy=15mm
Maximum value of SAR (measured) = 0.033 mW/g

Left Tilted Middle CH46/Zoom Scan (5x5x7)/Cube 0: Measurement grid: dx=7.5mm, dy=7.5mm, dz=5mm
Reference Value = 4.38 V/m; Power Drift = -0.057 dB
Peak SAR (extrapolated) = 0.140 W/kg
SAR(1 g) = 0.0376 mW/g; SAR(10 g) = 0.015 mW/g
Maximum value of SAR (measured) = 0.037 mW/g

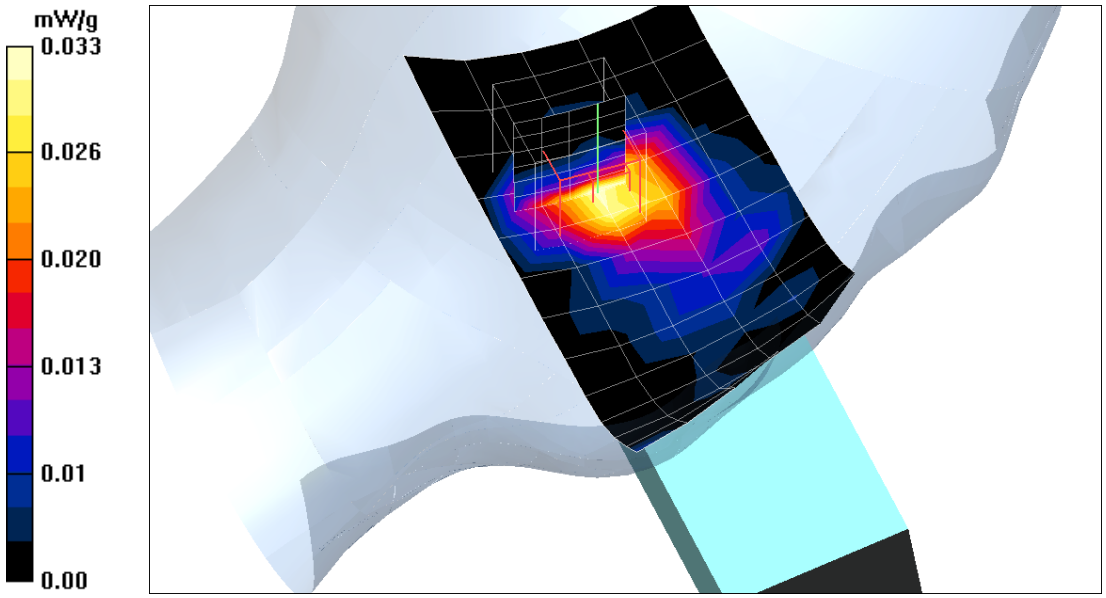

Date/Time: 4/29/2005 1:10:24 PM

Test Laboratory: Compliance Certification Services Inc.

2.4G Left Head

DUT: Premium Systems; Type: 2.4G wireless phone; Serial: N/A

Communication System: 2.4G ; Frequency: 2441 MHz;Duty Cycle: 1:11.9
Medium parameters used: f = 2441 MHz; σ = 1.84 mho/m; ε_r = 37.5; ρ = 1000 kg/m^3
Air Temperature:24.6 deg C;Liquid Temperature:23.6 deg C
Area scan setting: Find secondary maxima within 2 dB, and with a peak SAR value greater than 0.0012 mW/g
Zoom scan setting: Maximum number of cubes to measure is 2
Phantom section: Left Section

DASY4 Configuration:

- Probe: EX3DV4 - SN3554; ConvF(6.2, 6.2, 6.2); Calibrated: 11/19/2004
- Sensor-Surface: 4mm (Mechanical Surface Detection)Sensor-Surface: 0mm (Fix Surface)
- Electronics: DAE3 Sn558; Calibrated: 8/24/2004
- Phantom: SAM 12; Type: SAM V4.0; Serial: TP-1150
- Measurement SW: DASY4, V4.5 Build 19; Postprocessing SW: SEMCAD, V1.8 Build 146

Left Tilted Middle CH46/Area Scan (6x13x1): Measurement grid: dx=15mm, dy=15mm
Maximum value of SAR (measured) = 0.033 mW/g

Left Tilted Middle CH46/Z Scan (1x1x21): Measurement grid: dx=20mm, dy=20mm, dz=5mm
Maximum value of SAR (measured) = 0.017 mW/g

Left Tilted Middle CH46/Zoom Scan (5x5x7)/Cube 0: Measurement grid: dx=7.5mm, dy=7.5mm, dz=5mm
Reference Value = 4.38 V/m; Power Drift = -0.057 dB
Peak SAR (extrapolated) = 0.140 W/kg
SAR(1 g) = 0.0379 mW/g; SAR(10 g) = 0.015 mW/g
Maximum value of SAR (measured) = 0.037 mW/g

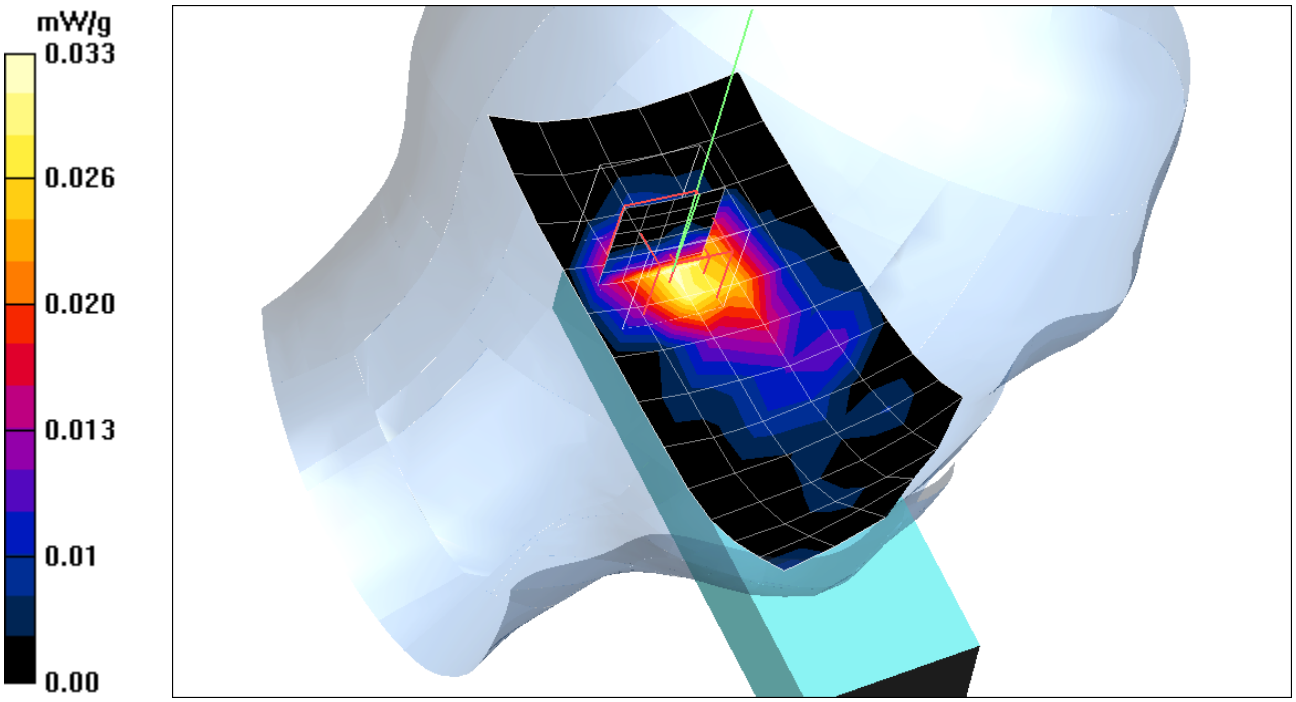
mW/g
0.033
0.026
0.020
0.013
0.01
0.00

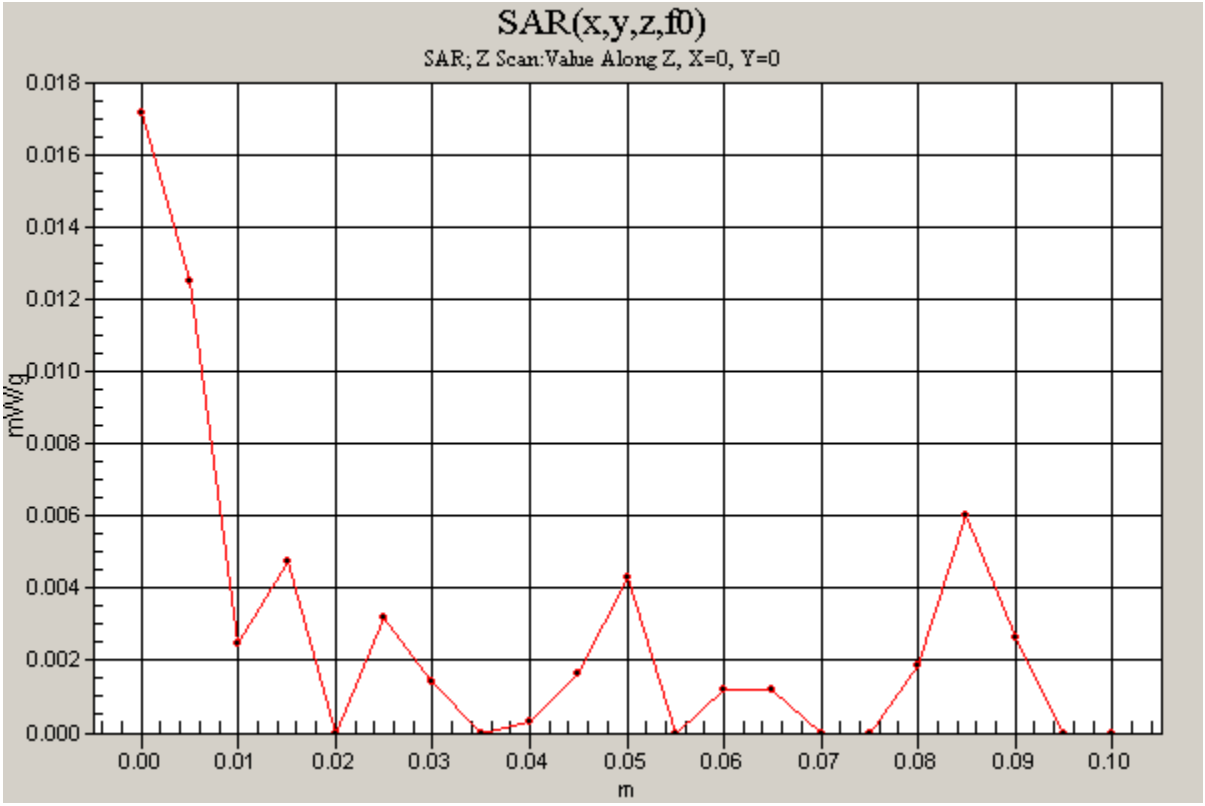
SAR(x,y,z,f0)
SAR; Z Scan:Value Along Z, X=0, Y=0
mW/g
0.018
0.016
0.014
0.012
0.010
0.008
0.006
0.004
0.002
0.000
0.00
0.01
0.02
0.03
0.04
0.05
0.06
0.07
0.08
0.09
0.10
m

Date/Time: 4/29/2005 4:40:06 PM

Test Laboratory: Compliance Certification Services Inc.

Right Head

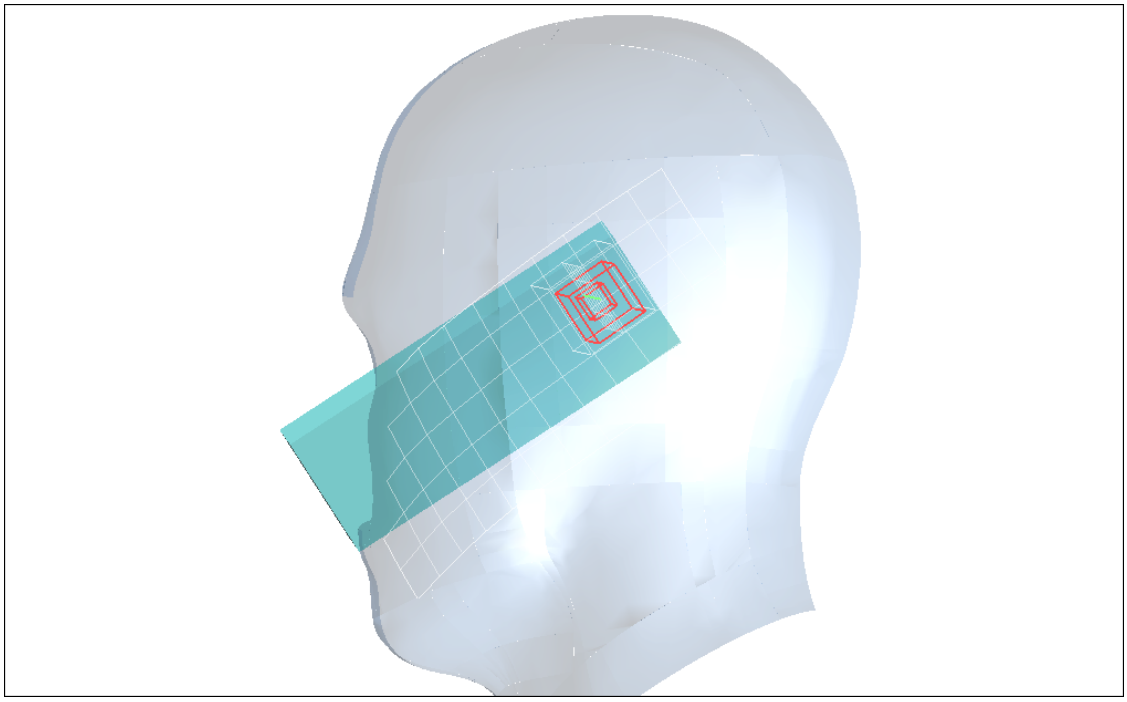

Date/Time: 4/29/2005 2:28:03 PM

Test Laboratory: Compliance Certification Services Inc.

2.4G Right Head

DUT: WDCT45-A2; Type: 2.4GHz WDCT Color Display; Serial: N/A

Communication System: 2.4G ; Frequency: 2402 MHz;Duty Cycle:1:11.9
Medium parameters used: f = 2402 MHz; σ = 1.84 mho/m; ε_r = 37.5; ρ = 1000 kg/m^3
Air Temperature:24.8 deg C;Liquid Temperature:23.6 deg C
Area scan setting: Find secondary maxima within 2 dB, and with a peak SAR value greater than 0.0012 mW/g
Zoom scan setting: Maximum number of cubes to measure is 2
Phantom section: Right Section

DASY4 Configuration:

- Probe: EX3DV4 - SN3554; ConvF(6.2, 6.2, 6.2); Calibrated: 11/19/2004
- Sensor-Surface: 4mm (Mechanical Surface Detection)
- Electronics: DAE3 Sn558; Calibrated: 8/24/2004
- Phantom: SAM 12; Type: SAM V4.0; Serial: TP-1150
- Measurement SW: DASY4, V4.5 Build 19; Postprocessing SW: SEMCAD, V1.8 Build 146

Right Cheek Low CH01/Area Scan (6x13x1): Measurement grid: dx=15mm, dy=15mm
Maximum value of SAR (measured) = 0.028 mW/g

Right Cheek Low CH01/Zoom Scan (5x5x7)/Cube 0: Measurement grid: dx=7.5mm, dy=7.5mm, dz=5mm
Reference Value = 3.48 V/m; Power Drift = 0.2 dB
Peak SAR (extrapolated) = 0.060 W/kg
SAR(1 g) = 0.0187 mW/g; SAR(10 g) = 0.00699 mW/g
Maximum value of SAR (measured) = 0.017 mW/g

Right Cheek Low CH01/Zoom Scan (5x5x7)/Cube 1: Measurement grid: dx=7.5mm, dy=7.5mm, dz=5mm
Reference Value = 3.48 V/m; Power Drift = 0.2 dB
Peak SAR (extrapolated) = 0.095 W/kg
SAR(1 g) = 0.0248 mW/g; SAR(10 g) = 0.00913 mW/g
Maximum value of SAR (measured) = 0.027 mW/g

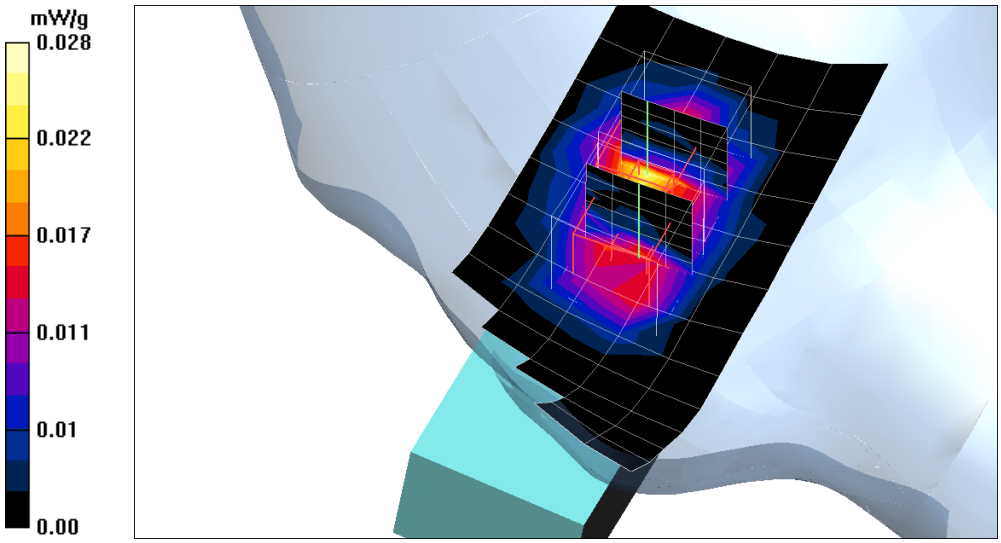

Date/Time: 4/29/2005 3:32:44 PM

Test Laboratory: Compliance Certification Services Inc.

2.4G Right Head

DUT: WDCT45-A2; Type: 2.4GHz WDCT Color Display; Serial: N/A

Communication System: 2.4G ; Frequency: 2441 MHz;Duty Cycle: 1:11.9
Medium parameters used: f = 2441 MHz; σ = 1.84 mho/m; ε_r = 37.5; ρ = 1000 kg/m^3
Air Temperature:24.8 deg C;Liquid Temperature:23.6 deg C
Area scan setting: Find secondary maxima within 2 dB, and with a peak SAR value greater than 0.0012 mW/g
Zoom scan setting: Maximum number of cubes to measure is 2
Phantom section: Right Section

DASY4 Configuration:

- Probe: EX3DV4 - SN3554; ConvF(6.2, 6.2, 6.2); Calibrated: 11/19/2004
- Sensor-Surface: 4mm (Mechanical Surface Detection)
- Electronics: DAE3 Sn558; Calibrated: 8/24/2004
- Phantom: SAM 12; Type: SAM V4.0; Serial: TP-1150
- Measurement SW: DASY4, V4.5 Build 19; Postprocessing SW: SEMCAD, V1.8 Build 146

Right Cheek Middle CH46/Area Scan (6x13x1): Measurement grid: dx=15mm, dy=15mm
Maximum value of SAR (measured) = 0.033 mW/g

Right Cheek Middle CH46/Zoom Scan (5x5x7)/Cube 0: Measurement grid: dx=7.5mm, dy=7.5mm, dz=5mm
Reference Value = 4.29 V/m; Power Drift = -0.131 dB
Peak SAR (extrapolated) = 0.109 W/kg
SAR(1 g) = 0.0252 mW/g; SAR(10 g) = 0.00934 mW/g
Maximum value of SAR (measured) = 0.025 mW/g

Right Cheek Middle CH46/Zoom Scan (5x5x7)/Cube 1: Measurement grid: dx=7.5mm, dy=7.5mm, dz=5mm
Reference Value = 4.29 V/m; Power Drift = -0.131 dB
Peak SAR (extrapolated) = 0.115 W/kg
SAR(1 g) = 0.0294 mW/g; SAR(10 g) = 0.013 mW/g
Maximum value of SAR (measured) = 0.032 mW/g

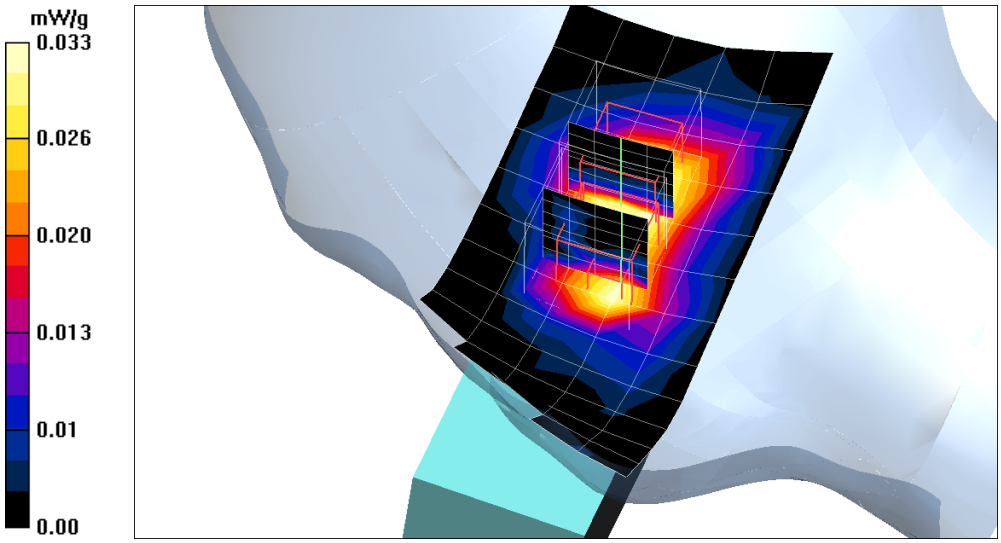

Test Laboratory: Compliance Certification Services Inc.

2.4G Right Head

DUT: WDCT45-A2; Type: 2.4GHz WDCT Color Display; Serial: N/A

Communication System: 2.4G ; Frequency: 2480 MHz;Duty Cycle: 1:11.9
Medium parameters used: f = 2480 MHz; σ = 1.84 mho/m; ε_r = 37.5; ρ = 1000 kg/m^3
Air Temperature:24.6 deg C;Liquid Temperature:23.6 deg C
Area scan setting: Find secondary maxima within 2 dB, and with a peak SAR value greater than 0.0012 mW/g
Zoom scan setting: Maximum number of cubes to measure is 2
Phantom section: Right Section

DASY4 Configuration:

- Probe: EX3DV4 - SN3554; ConvF(6.2, 6.2, 6.2); Calibrated: 11/19/2004
- Sensor-Surface: 4mm (Mechanical Surface Detection)
- Electronics: DAE3 Sn558; Calibrated: 8/24/2004
- Phantom: SAM 12; Type: SAM V4.0; Serial: TP-1150
- Measurement SW: DASY4, V4.5 Build 19; Postprocessing SW: SEMCAD, V1.8 Build 146

Right Cheek High CH92/Area Scan (6x13x1): Measurement grid: dx=15mm, dy=15mm
Maximum value of SAR (measured) = 0.032 mW/g

Right Cheek High CH92/Zoom Scan (5x5x7)/Cube 0: Measurement grid: dx=7.5mm, dy=7.5mm, dz=5mm
Reference Value = 4.11 V/m; Power Drift = 0.2 dB
Peak SAR (extrapolated) = 0.114 W/kg
SAR(1 g) = 0.0344 mW/g; SAR(10 g) = 0.013 mW/g
Maximum value of SAR (measured) = 0.036 mW/g

Right Cheek High CH92/Zoom Scan (5x5x7)/Cube 1: Measurement grid: dx=7.5mm, dy=7.5mm, dz=5mm
Reference Value = 4.11 V/m; Power Drift = 0.2 dB
Peak SAR (extrapolated) = 0.126 W/kg
SAR(1 g) = 0.0272 mW/g; SAR(10 g) = 0.011 mW/g
Maximum value of SAR (measured) = 0.024 mW/g

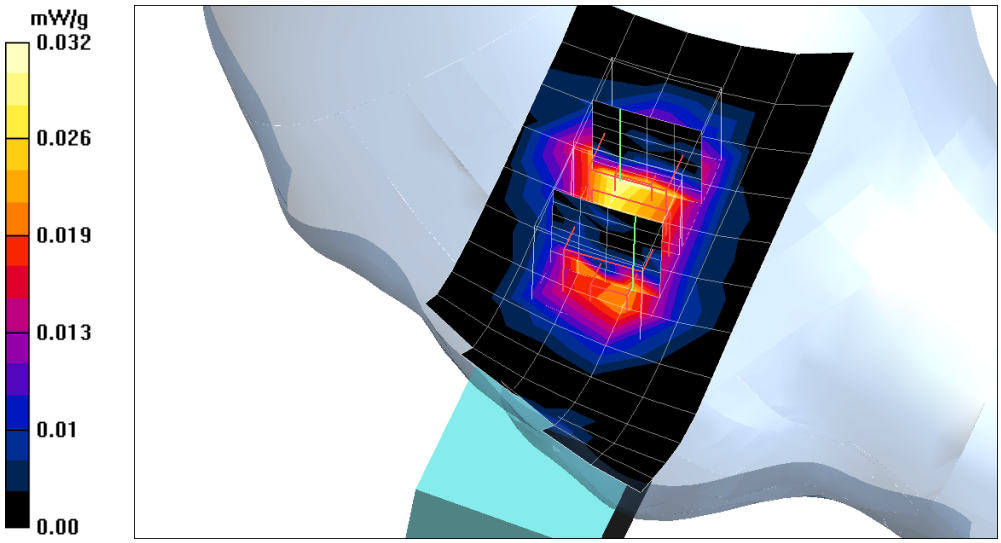

Date/Time: 4/29/2005 2:45:51 PM

Test Laboratory: Compliance Certification Services Inc.

2.4G Right Head

DUT: WDCT45-A2; Type: 2.4GHz WDCT Color Display; Serial: N/A

Communication System: 2.4G ; Frequency: 2402 MHz;Duty Cycle: 1:11.9
Medium parameters used: f = 2402 MHz; σ = 1.84 mho/m; ε_r = 37.5; ρ = 1000 kg/m^3
Air Temperature:24.8 deg C;Liquid Temperature:23.6 deg C
Area scan setting: Find secondary maxima within 2 dB, and with a peak SAR value greater than 0.0012 mW/g
Zoom scan setting: Maximum number of cubes to measure is 2
Phantom section: Right Section

DASY4 Configuration:

- Probe: EX3DV4 - SN3554; ConvF(6.2, 6.2, 6.2); Calibrated: 11/19/2004
- Sensor-Surface: 4mm (Mechanical Surface Detection)
- Electronics: DAE3 Sn558; Calibrated: 8/24/2004
- Phantom: SAM 12; Type: SAM V4.0; Serial: TP-1150
- Measurement SW: DASY4, V4.5 Build 19; Postprocessing SW: SEMCAD, V1.8 Build 146

Right Tilted Low CH01/Area Scan (6x13x1): Measurement grid: dx=15mm, dy=15mm
Maximum value of SAR (measured) = 0.025 mW/g

Right Tilted Low CH01/Zoom Scan (5x5x7)/Cube 0: Measurement grid: dx=7.5mm, dy=7.5mm, dz=5mm
Reference Value = 3.78 V/m; Power Drift = 0.063 dB
Peak SAR (extrapolated) = 0.073 W/kg
SAR(1 g) = 0.0239 mW/g; SAR(10 g) = 0.00728 mW/g
Maximum value of SAR (measured) = 0.028 mW/g

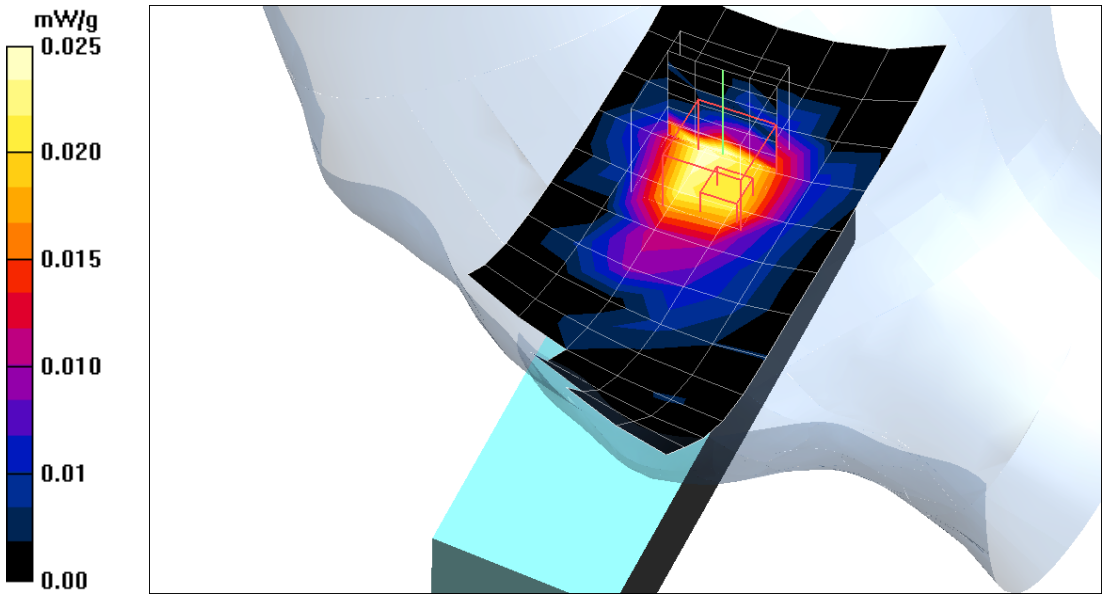

Date/Time: 4/29/2005 3:52:03 PM

Test Laboratory: Compliance Certification Services Inc.

2.4G Right Head

DUT: WDCT45-A2; Type: 2.4GHz WDCT Color Display; Serial: N/A

Communication System: 2.4G ; Frequency: 2441 MHz;Duty Cycle: 1:11.9
Medium parameters used: f = 2441 MHz; σ = 1.84 mho/m; ε_r = 37.5; ρ = 1000 kg/m^3
Air Temperature:24.8 deg C;Liquid Temperature:23.6 deg C
Area scan setting: Find secondary maxima within 2 dB, and with a peak SAR value greater than 0.0012 mW/g
Zoom scan setting: Maximum number of cubes to measure is 2
Phantom section: Right Section

DASY4 Configuration:

- Probe: EX3DV4 - SN3554; ConvF(6.2, 6.2, 6.2); Calibrated: 11/19/2004
- Sensor-Surface: 4mm (Mechanical Surface Detection)
- Electronics: DAE3 Sn558; Calibrated: 8/24/2004
- Phantom: SAM 12; Type: SAM V4.0; Serial: TP-1150
- Measurement SW: DASY4, V4.5 Build 19; Postprocessing SW: SEMCAD, V1.8 Build 146

Right Tilted Middle CH46/Area Scan (6x13x1): Measurement grid: dx=15mm, dy=15mm
Maximum value of SAR (measured) = 0.030 mW/g

Right Tilted Middle CH46/Zoom Scan (5x5x7)/Cube 0: Measurement grid: dx=7.5mm, dy=7.5mm, dz=5mm
Reference Value = 4.29 V/m; Power Drift = -0.2 dB
Peak SAR (extrapolated) = 0.141 W/kg
SAR(1 g) = 0.0352 mW/g; SAR(10 g) = 0.014 mW/g
Maximum value of SAR (measured) = 0.034 mW/g

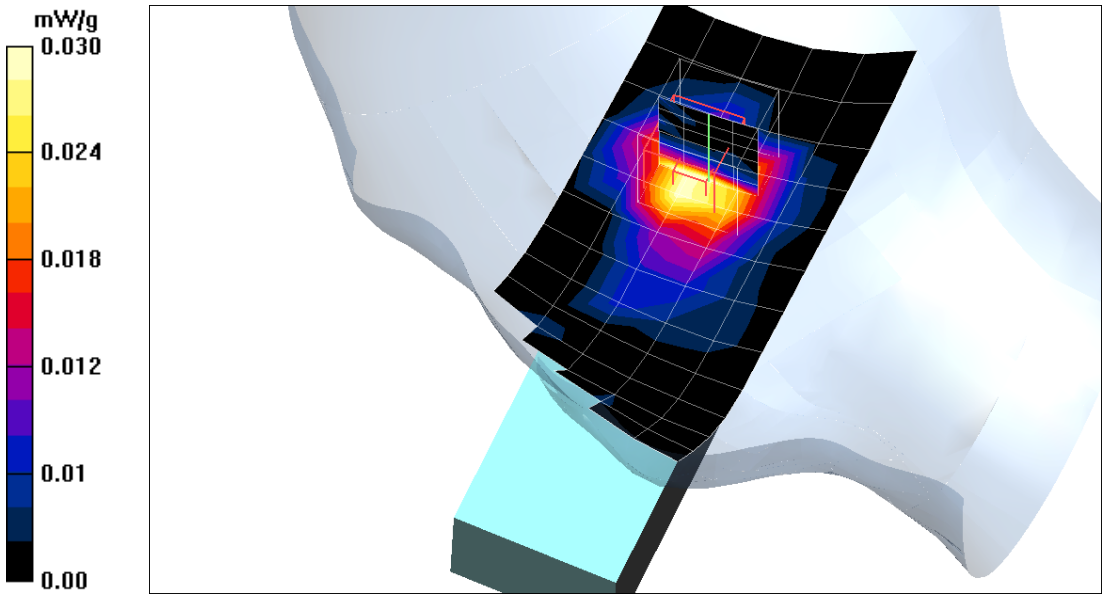

Date/Time: 4/29/2005 4:40:06 PM

Test Laboratory: Compliance Certification Services Inc.

2.4G Right Head

DUT: WDCT45-A2; Type: 2.4GHz WDCT Color Display; Serial: N/A

Communication System: 2.4G ; Frequency: 2480 MHz;Duty Cycle: 1:11.9
Medium parameters used: f = 2480 MHz; σ = 1.84 mho/m; ε_r = 37.5; ρ = 1000 kg/m^3
Air Temperature:24.6 deg C;Liquid Temperature:23.6 deg C
Area scan setting: Find secondary maxima within 2 dB, and with a peak SAR value greater than 0.0012 mW/g
Zoom scan setting: Maximum number of cubes to measure is 2
Phantom section: Right Section

DASY4 Configuration:

- Probe: EX3DV4 - SN3554; ConvF(6.2, 6.2, 6.2); Calibrated: 11/19/2004
- Sensor-Surface: 4mm (Mechanical Surface Detection)
- Electronics: DAE3 Sn558; Calibrated: 8/24/2004
- Phantom: SAM 12; Type: SAM V4.0; Serial: TP-1150
- Measurement SW: DASY4, V4.5 Build 19; Postprocessing SW: SEMCAD, V1.8 Build 146

Right Tilted High CH92/Area Scan (6x13x1): Measurement grid: dx=15mm, dy=15mm
Maximum value of SAR (measured) = 0.035 mW/g

Right Tilted High CH92/Zoom Scan (5x5x7)/Cube 0: Measurement grid: dx=7.5mm, dy=7.5mm, dz=5mm
Reference Value = 4.23 V/m; Power Drift = 0.084 dB
Peak SAR (extrapolated) = 0.111 W/kg
SAR(1 g) = 0.0330 mW/g; SAR(10 g) = 0.014 mW/g
Maximum value of SAR (measured) = 0.034 mW/g

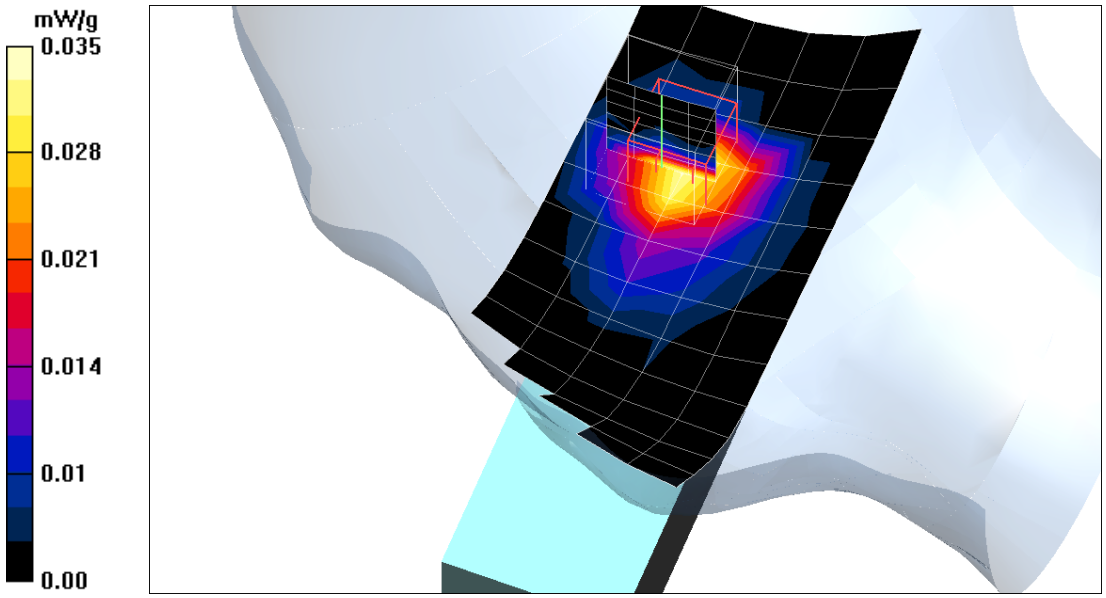

Date/Time: 5/4/2005 1:55:57 PM

Test Laboratory: Compliance Certification Services Inc.

Body

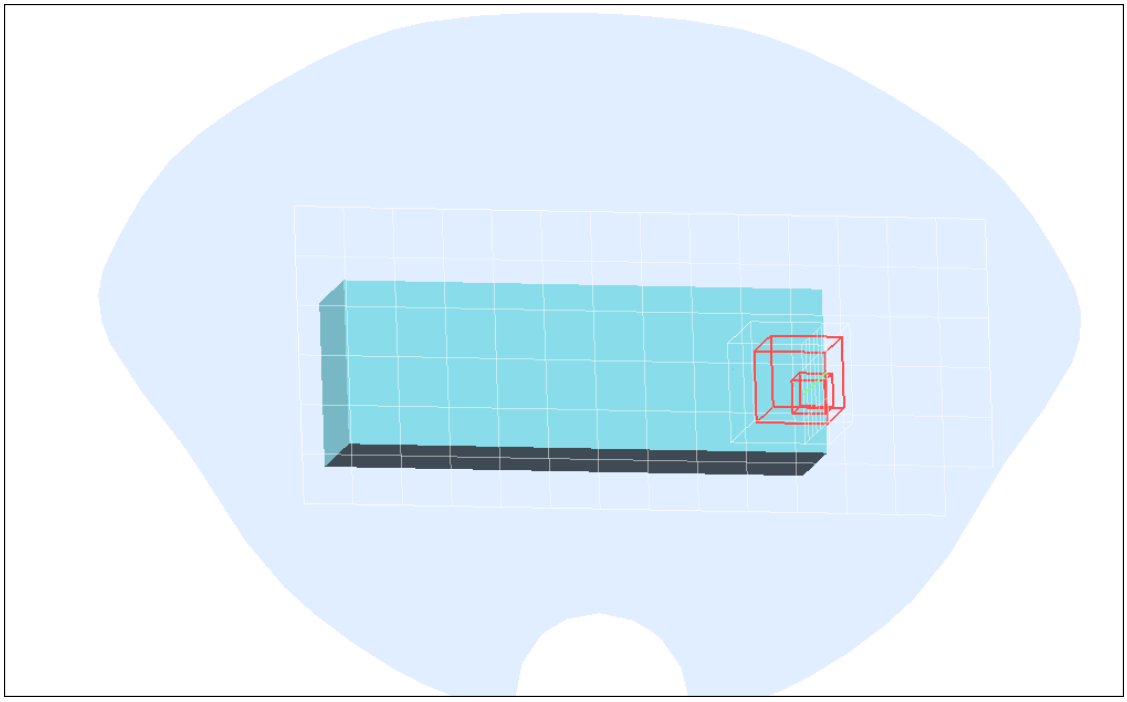

Date/Time: 5/4/2005 1:45:25 PM

Test Laboratory: Compliance Certification Services Inc.

2.4G Body Back

DUT: Premium Systems; Type: 2.4G wireless phone; Serial: N/A

Communication System: 2.4G ; Frequency: 2402 MHz;Duty Cycle: 1:11.9
Medium parameters used: f = 2402 MHz; σ = 1.91 mho/m; ε_r = 51.1; ρ = 1000 kg/m^3
Air Temperature:25.5 deg C;Liquid Temperature:24.3 deg C
Area scan setting: Find secondary maxima within 2 dB, and with a peak SAR value greater than 0.0012 mW/g
Zoom scan setting: Maximum number of cubes to measure is 2
Phantom section: Flat Section

DASY4 Configuration:

- Probe: EX3DV4 - SN3554; ConvF(6.14, 6.14, 6.14); Calibrated: 11/19/2004
- Sensor-Surface: 4mm (Mechanical Surface Detection)
- Electronics: DAE3 Sn558; Calibrated: 8/24/2004
- Phantom: SAM 12; Type: SAM V4.0; Serial: TP-1150
- Measurement SW: DASY4, V4.5 Build 19; Postprocessing SW: SEMCAD, V1.8 Build 146

Body Back Low CH01/Area Scan (7x15x1): Measurement grid: dx=15mm, dy=15mm
Maximum value of SAR (measured) = 0.031 mW/g

Body Back Low CH01/Zoom Scan (5x5x7)/Cube 0: Measurement grid: dx=7.5mm, dy=7.5mm, dz=5mm
Reference Value = 0.387 V/m; Power Drift = -0.2 dB
Peak SAR (extrapolated) = 0.068 W/kg
SAR(1 g) = 0.0162 mW/g; SAR(10 g) = 0.00328 mW/g
Maximum value of SAR (measured) = 0.026 mW/g

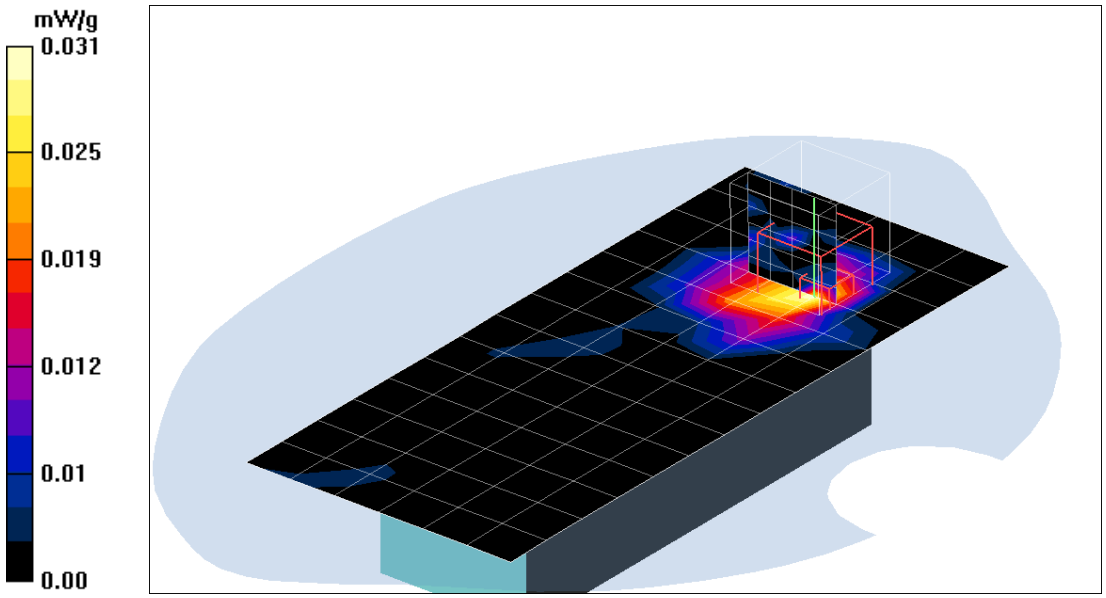

Date/Time: 5/4/2005 2:31:45 PM

Test Laboratory: Compliance Certification Services Inc.

2.4G Body Back

DUT: Premium Systems; Type: 2.4G wireless phone; Serial: N/A

Communication System: 2.4G ; Frequency: 2441 MHz;Duty Cycle: 1:11.9
Medium parameters used: f = 2441 MHz; σ = 1.91 mho/m; ε_r = 51.1; ρ = 1000 kg/m^3
Air Temperature:25.5 deg C;Liquid Temperature:24.3 deg C
Area scan setting: Find secondary maxima within 2 dB, and with a peak SAR value greater than 0.0012 mW/g
Zoom scan setting: Maximum number of cubes to measure is 2
Phantom section: Flat Section

DASY4 Configuration:

- Probe: EX3DV4 - SN3554; ConvF(6.14, 6.14, 6.14); Calibrated: 11/19/2004
- Sensor-Surface: 4mm (Mechanical Surface Detection)
- Electronics: DAE3 Sn558; Calibrated: 8/24/2004
- Phantom: SAM 12; Type: SAM V4.0; Serial: TP-1150
- Measurement SW: DASY4, V4.5 Build 19; Postprocessing SW: SEMCAD, V1.8 Build 146

Body Back Middle CH46/Area Scan (7x15x1): Measurement grid: dx=15mm, dy=15mm
Maximum value of SAR (measured) = 0.036 mW/g

Body Back Middle CH46/Zoom Scan (5x5x7)/Cube 0: Measurement grid: dx=7.5mm, dy=7.5mm, dz=5mm
Reference Value = 0.918 V/m; Power Drift = 0.2 dB
Peak SAR (extrapolated) = 0.131 W/kg
SAR(1 g) = 0.0309 mW/g; SAR(10 g) = 0.012 mW/g
Maximum value of SAR (measured) = 0.034 mW/g

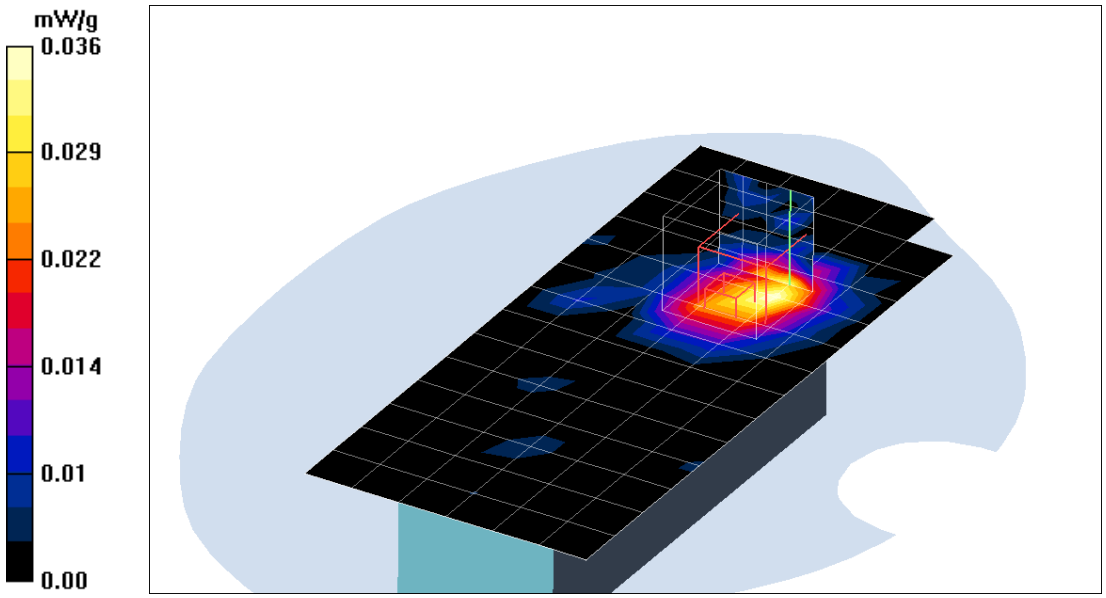

Date/Time: 5/4/2005 11:55:57 AM

Test Laboratory: Compliance Certification Services Inc.

2.4G Body Back

DUT: Premium Systems; Type: 2.4G wireless phone; Serial: N/A

Communication System: 2.4G ; Frequency: 2480 MHz;Duty Cycle: 1:11.9
Medium parameters used: f = 2480 MHz; σ = 1.91 mho/m; ε_r = 51.1; ρ = 1000 kg/m^3
Air Temperature:25.5 deg C;Liquid Temperature:24.3 deg C
Area scan setting: Find secondary maxima within 2 dB, and with a peak SAR value greater than 0.0012 mW/g
Zoom scan setting: Maximum number of cubes to measure is 2
Phantom section: Flat Section

DASY4 Configuration:

- Probe: EX3DV4 - SN3554; ConvF(6.14, 6.14, 6.14); Calibrated: 11/19/2004
- Sensor-Surface: 4mm (Mechanical Surface Detection)
- Electronics: DAE3 Sn558; Calibrated: 8/24/2004
- Phantom: SAM 12; Type: SAM V4.0; Serial: TP-1150
- Measurement SW: DASY4, V4.5 Build 19; Postprocessing SW: SEMCAD, V1.8 Build 146

Body Back High CH92/Area Scan (7x15x1): Measurement grid: dx=15mm, dy=15mm
Maximum value of SAR (measured) = 0.037 mW/g
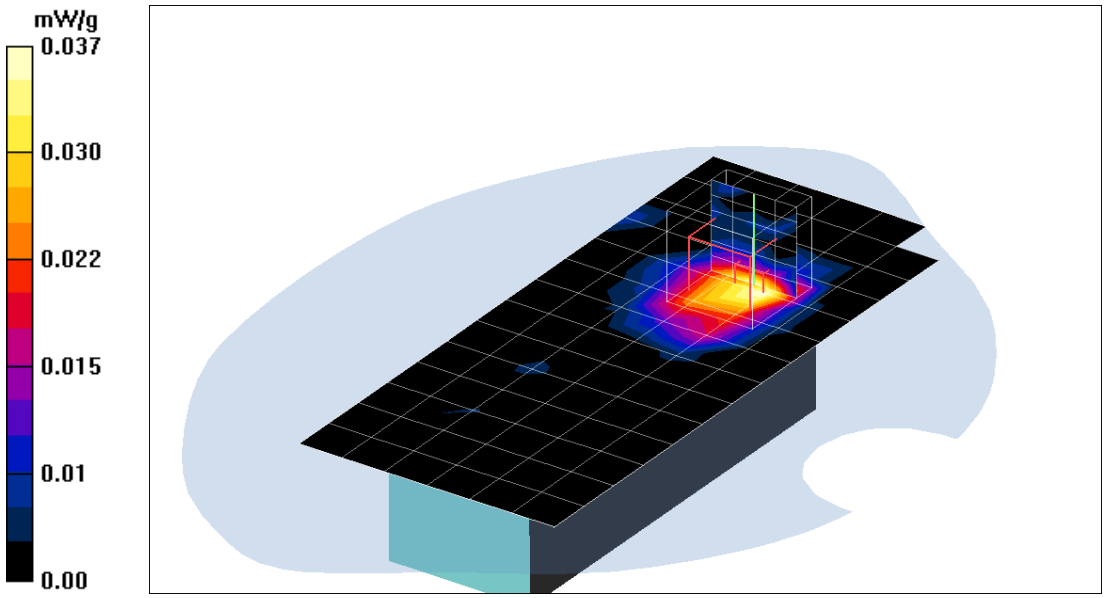
Body Back High CH92/Zoom Scan (5x5x7)/Cube 0: Measurement grid: dx=7.5mm, dy=7.5mm, dz=5mm
Reference Value = 1.52 V/m; Power Drift = -0.2 dB
Peak SAR (extrapolated) = 0.154 W/kg
SAR(1 g) = 0.0340 mW/g; SAR(10 g) = 0.012 mW/g
Maximum value of SAR (measured) = 0.037 mW/g