Trimble TSC510 controller

User Guide

Version 1.00
Revision A
March 2025
Model no. 135100

Trimble Inc.

trimble.com

Copyright and trademarks

© 2025, Trimble Inc. All rights reserved.

Trimble and the Globe & Triangle logo are trademarks of Trimble Inc., registered in the United States and in other countries. Access is a trademark of Trimble Inc.

Microsoft and Windows are either registered trademarks or trademarks of Microsoft Corporation in the United States and/or other countries.

Google, Google Play and other marks are trademarks of Google LLC. The Android robot is reproduced or modified from work created and shared by Google and used according to terms described in the Creative Commons 3.0 Attribution License.

The Bluetooth word mark and logos are owned by the Bluetooth SIG, Inc. and any use of such marks by Trimble Inc. is under license.

All other trademarks are the property of their respective owners.

Global technical support

To request detailed technical assistance for Trimble solutions, contact trimble_support@trimble.com or locate the appropriate Trimble Support representative for your solution.

Release Notice

This is the March release (Revision A) of the Trimble TSC510 controller documentation.

Recycling information

You should dispose of the device and accessories properly according to local laws and regulations. Because the device contains electronic components, it must be disposed of separately from household waste. When the device reaches its end of life, contact your local Trimble dealer to learn about disposal and recycling options for your area.

Recycling in Europe

The symbol above means that according to local laws and regulations your product and/or its battery shall be disposed of separately from household waste. When this product reaches its end of life, take it to a collection point designated by local authorities. The separate collection and recycling of your product and/or its battery at the time of disposal will help conserve natural resources and ensure that it is recycled in a manner that protects human health and the environment.

For information about recycling Trimble WEEE (Waste Electrical and Electronic Equipment) products that run on electrical power go to https://www.trimble.com/en/our-commitment/responsible-business/product-compliance/environmental-compliance.

The ERFC Netherlands will recycle on behalf of Trimble Distributors, conforming to the European Union's WEEE Directive 2002/96/EC, any WEEE supplied to the market by Trimble Inc., their partners and/or subsidiaries.

Taiwan – Battery Recycling Requirements

The product contains a Lithium-ion battery. Taiwanese regulations require that waste batteries are recycled.

廢電池請回收

Regional compliance

Australia and New Zealand

This product conforms with the regulatory requirements of the Australian Communications and Media Authority (ACMA) Telecommunications, Radiocommunications and EMC Labelling Notices, thus satisfying the requirements for RCM marking and sale within Australia and New Zealand.

Europe

BE	BG	CZ	DK
DE	EE	IE	EL
ES	FR	HR	IT
CY	LV	LT	LU
HU	MT	NL	AT
PL	PT	RO	SI
SK	FI	SE	UK

UK

This Trimble product has been tested and found to comply with all requirements for CE Marking and sale within the European Economic Area (EEA). The device has Bluetooth and wireless LAN approval and satisfies the requirements for Radio and Telecommunication Terminal Equipment specified by European Council Directive 2014/53/EU. These requirements provide reasonable protection against harmful interference when the equipment is operated appropriately in a residential or commercial environment.

European declaration of conformity

Manufacturer's Name: Trimble Inc.

Manufacturer's Address: 4450 Gibson Dr, Tipp City, OH 45371, USA

Declares, under our sole responsibility, that the product:

- Product Name: TSC510
- Model Number: 135100

conforms to the following Product Specifications:

- EMC : 2014/30/EU
- LVD : 2014/35/EU
- RED : 2014/53/EU

The full text of the EU declaration of conformity is available on request at trimble.com.

Importer of Record

Trimble European Regional Fulfillment Center Logistics
Manager
Trimble Europe B.V. & Trimble International B.V.
Industrieweg 187a
5683 CC Best The
Netherlands

Trimble EC

EC REP

Trimble Germany Am
Prime Parc 11 65479
Raunheim Germany

CAUTION - Only approved accessories may be used with this equipment. In general, all cables must be high quality, shielded, correctly terminated and normally restricted to two meters in length. Power supplies approved for this product employ special provisions to avoid radio interference and should not be altered or substituted. Unapproved modifications or operations beyond or in conflict with these instructions for use may void authorization by the authorities to operate the equipment.

Power and frequencies used by the TSC510

Technologies	Frequency range (MHz)	E.R.P. / E.I.R.P.
WCDMA Band I	1920-1980 MHz (uplink) 2110-2170 MHz (downlink)	27.58
WCDMA Band VIII	880-915 MHz (uplink) 925-960 MHz (downlink)	22.94
LTE Band 1	1920-1980 MHz (uplink) 2110-2170 MHz (downlink)	27.08 (LTE)
LTE Band 3	1710-1785 MHz (uplink) 1805-1880 MHz (downlink)	28(LTE),
LTE Band 7	2500-2570 MHz (uplink) 2620-2690 MHz (downlink)	25.83(LTE),
LTE Band 8	880-915 MHz (uplink) 925-960 MHz (downlink)	22.44(LTE),
LTE Band 20	832-862 MHz (uplink) 791-821 MHz (downlink)	25.62(LTE),
LTE Band 28	703-748MHz (uplink) 758-803 MHz (downlink)"	25.72(LTE),
LTE Band 34	2010 - 2025 MHz (uplink) / (downlink)	27.57
LTE Band 38	2570-2620 MHz (uplink) / (downlink)	26.87(LTE),
LTE Band 40	2300-2400 MHz (uplink) / (downlink)	25.83(LTE),
LTE Band 41	2496–2690 MHz (uplink) / (downlink)	27.43(LTE),
LTE Band 41_HPUE	2496–2690 MHz (uplink) / (downlink)	29.43(LTE),
LTE Band 42	3400-3600 MHz (uplink) / (downlink)	26.59
LTE Band 42_HPUE	3400-3600 MHz (uplink) / (downlink)	27.59
LTE Band 43	3600 - 3800 MHz (uplink) / (downlink)	26.77
LTE Band 43_HPUE	3600 - 3800 MHz (uplink) / (downlink)	28.77
LTE Band 46	5150-5725 MHz (downlink)	-

Technologies	Frequency range (MHz)	E.R.P. / E.I.R.P.
Bluetooth EDR	2400-2483.5 MHz	18.3
Bluetooth LE	2400-2483.5 MHz	9.99
WLAN 2.4 GHz	2400-2483.5 MHz	19.92
WLAN 5 GHz	5150-5350 MHz	22.91
WLAN 5 GHz	5470-5725 MHz	19.97
WLAN 5 GHz	5725-5875 MHz	13.94
NFC	13.56 MHz	-14.13@dBuV/m @ 10m
GPS	1559-1610 MHz, 1164-1215MHz	-

Canada

IC : 5817A-135100, 5817A-N7NEM75T

This digital apparatus does not exceed the Class B limits for radio noise emissions from digital apparatus as set out in the radio interference regulations of the Canadian Department of Communications.

Le présent appareil numérique n'émet pas de bruits radioélectriques dépassant les limites applicables aux appareils numériques de Classe B prescrites dans le règlement sur le brouillage radioélectrique édicté par le Ministère des Communications du Canada.

Changes and modifications not expressly approved by the manufacturer or registrant of this equipment can void your authority to operate this equipment under Industry Canada rules.

Les changements et modifications non expressément approuvés par le fabricant ou le détenteur de cet équipement peuvent annuler votre droit à utiliser cet appareil en vertu des règles d'Industrie Canada.

Licence exempt

This device contains license-exempt transmitter(s)/receiver(s) that comply with Innovation, Science and Economic Development Canada's license-exempt RSS(s). Operation is subject to the following two conditions:

(1) this device may not cause interference, and

(2) this device must accept any interference, including interference that may cause undesired operation of the device.

L'émetteur/récepteur exempt de licence contenu dans le présent appareil est conforme aux CNR d'Innovation, Sciences et Développement économique Canada applicables aux appareils radio exempts de licence. L’exploitation est autorisée aux deux conditions suivantes :

(1) l'appareil ne doit pas produire de brouillage, et

(2) l'utilisateur de l'appareil doit accepter tout brouillage radioélectrique subi, même si le brouillage est susceptible d'en compromettre le fonctionnement.

This Class B digital apparatus complies with Canadian ICES-003.

Cet appareil numérique de la classe B est conforme à la norme NMB-003 du Canada.

IMPORTANT NOTE: IC Radiation Exposure Statement

For satisfying FCC RF exposure compliance requirements, body-worn operations are restricted to belt-clips, holsters or similar accessories that have no metallic component in the assembly and must provide at least 10 mm separation between the device and the user's body. This device and its antenna(s) must not be co-located or operating in conjunction with any other antenna or transmitter. The County Code Selection feature is disabled for products marketed in the US/Canada.

Pour satisfaire aux exigences de conformité d'exposition RF de la FCC, les opérations portées sur le corps sont limitées aux clips de ceinture, aux étuis ou aux accessoires similaires qui n'ont pas de composant métallique dans l'assemblage et doivent fournir une séparation d'au moins 10 mm entre l'appareil et le corps de l'utilisateur. Cet appareil et son (ses) antenne (s) ne doivent pas être colocalisés ou fonctionner avec une autre antenne ou émetteur. La fonction de sélection du code de comté est désactivée pour les produits commercialisés aux États-Unis / au Canada.

IC SAR warning

Radio Frequency (RF) Exposure Information

The radiated output power of the Wireless Device is below the Industry Canada (IC) radio frequency exposure limits. The Wireless Device should be used in such a manner such that the potential for human contact during normal operation is minimized.

This device has been evaluated for and shown compliant with the IC Specific Absorption Rate ("SAR") limits when installed in specific host products operated in portable exposure conditions.

Informations concernant l'exposition aux fréquences radio (RF)

La puissance de sortie émise par l'appareil de sans fil est inférieure à la limite d'exposition aux fréquences radio d'Industry Canada (IC). Utilisez l'appareil de sans fil de façon à minimiser les contacts humains lors du fonctionnement normal.

Ce périphérique a été évalué et démontré conforme aux limites SAR (Specific Absorption Rate – Taux d'absorption spécifique) d'IC lorsqu'il est installé dans des produits hôtes particuliers qui fonctionnent dans des conditions d'exposition à des appareils portables.

The device could automatically discontinue transmission in case of absence of information to transmit, or operational failure. Note that this is not intended to prohibit transmission of control or signaling information or the use of repetitive codes where required by the technology.

i. the device for operation in the band 5150-5250 MHz is only for indoor use to reduce the potential for harmful interference to co-channel mobile satellite systems;

ii. where applicable, antenna type(s), antenna models(s), and worst-case tilt angle(s) necessary to remain compliant with the e.i.r.p. elevation mask requirement set forth in section 6.2.2.3 shall be clearly indicated.

L'appareil pourrait interrompre automatiquement la transmission en cas d'absence d'informations à transmettre ou de panne de fonctionnement. Notez que cela n'a pas pour but d'interdire la transmission d'informations de contrôle ou de signalisation ou l'utilisation de codes répétitifs lorsque la technologie l'exige.

i. les dispositifs fonctionnant dans la bande de 5 150 à 5 250 MHz sont réservés uniquement pour une utilisation à l'intérieur afin de réduire les risques de brouillage préjudiciable aux systèmes de satellites mobiles utilisant les mêmes canaux ;

FOR PORTABLE DEVICE USAGE (<20m from body/SAR needed)

Radiation Exposure Statement:

The product comply with the Canada portable RF exposure limit set forth for an uncontrolled environment and are safe for intended operation as described in this manual. The further RF exposure reduction can be achieved if the product can be kept as far as possible from the user body or set the device to lower output power if such function is available.

Déclaration d'exposition aux radiations:

Le produit est conforme aux limites d'exposition pour les appareils portables RF pour les Etats-Unis et le Canada établies pour un environnement non contrôlé.

Le produit est sûr pour un fonctionnement tel que décrit dans ce manuel. La réduction aux expositions RF peut être augmentée si l'appareil peut être conservé aussi loin que possible du corps de l'utilisateur ou que le dispositif est réglé sur la puissance de sortie la plus faible si une telle fonction est disponible.

U.S.

FCC ID: S9E-135100, S9E-N7NEM75T

Federal Communication Commission (FCC) Interference Compliance Statement

This equipment has been tested and found to comply with the limits for a Class B digital device pursuant to Part 15 of the FCC Rules. These limits are designed to provide reasonable protection against harmful interference in a residential installation. Operation is subject to the following two conditions: (1) this device may not cause harmful interference, and (2) this device must accept any interference received, including interference that may cause undesired operation.

This equipment generates, uses, and can radiate radio frequency energy and, if not installed and used in accordance with the instructions may cause harmful interference to radio communication. However, there is no guarantee that interference will not occur in a particular installation. If this equipment does cause harmful interference to radio or television reception, which can be determined by turning the equipment off and on, the user is encouraged to try to correct the interference by one or more of the following measures:

• Reorient or relocate the receiving antenna.

• Increase the separation between the equipment and the receiver.

• Connect the equipment into an outlet on a circuit different from that to which the receiver is connected.

• Consult the dealer or an experienced radio/TV technician for help.

Changes and modifications not expressly approved by the manufacturer or registrant of this equipment can void your authority to operate this equipment under Federal Communications Commission rules.

The radios in this device have been designed and manufactured to not exceed stipulated emission limits for exposure to radio frequency (RF) energy as required by the Federal Communications Commission of the U.S. Government 47 C.F.R. § 2.1093.

For satisfying FCC RF exposure compliance requirements, body-worn operations are restricted to belt-clips, holsters or similar accessories that have no metallic component in the assembly and must provide at least 10 mm separation between the device and the user's body. This device and its antenna(s) must not be co-located or operating in conjunction with any other antenna or transmitter. The County Code Selection feature is disabled for products marketed in the US/Canada. This device and its antenna(s) must not be co-located or operating in conjunction with any other antenna or transmitter. The County Code Selection feature is disabled for products marketed in the US/Canada.

FOR PORTABLE DEVICE USAGE (<20m from body/SAR needed)

Radiation Exposure Statement:

The product comply with the FCC portable RF exposure limit set forth for an uncontrolled environment and are safe for intended operation as described in this manual. The further RF exposure reduction can be achieved if the product can be kept as far as possible from the user body or set the device to lower output power if such function is available.

FOR COUNTRY CODE SELECTION USAGE (WLAN DEVICES)

Note: The country code selection is for non-US model only and is not available to all US model. Per FCC regulation, all WiFi product marketed in US must fixed to US operation channels only.

CE

a. Caution:

• Risk of explosion if battery replaced by an incorrect type.

• Dispose of used batteries according to the instructions.

b. Make sure the temperature for the adapter while charging is within 0 °C to +45 °C (32 °F to 113 °F).

NCC

取得審驗證明之低功率射頻器材，非經核准，公司、商號或使用者均不得擅自變更頻率、加大功率或變更原設計之特性及功能。

低功率射頻器材之使用不得影響飛航安全及干擾合法通信；經發現有干擾現象時，應立即停用，並改善至無干擾時方得繼續使用。前述合法通信，指依電信管理法規定作業之無線電通信。低功率射頻器材須忍受合法通信或工業、科學及醫療用電波輻射性電機設備之干擾。

本產品內含射頻模組：XXXyyyLPDzzzz-x

應避免影響附近雷達系統之操作。

8.1.1 警語內容：「減少電磁波影響，請妥適使用」。

8.2.2 移動式或固定式無線接取終端設備

使用過度恐傷害視力。

注意事項(於產品說明書及外包裝標示)：

a、使用30分鐘請休息10分鐘。

b、未滿2歲幼兒不看螢幕，2歲以上每天看螢幕不要超過1小時。

電波功率密度MPE 標準值：20 mW/cm2，送測產品實測值：0.082mW/cm2，建議使用時設備天線至少距離人體20 公分。

Limited Warranty Terms and Conditions

Product Limited Warranty

Subject to the terms and conditions set forth herein, Trimble Inc. (“Trimble”) warrants that for a period of two (2) years from date of purchase this Trimble product (the “Product”) will substantially conform to Trimble's publicly available specifications for the Product and that the hardware and any storage media components of the Product will be substantially free from defects in materials and workmanship.

Product Software

Product software, whether built into hardware circuitry as firmware, provided as a standalone computer software product, embedded in flash memory, or stored on magnetic or other media, is licensed solely for use with or as an integral part of the Product and is not sold. The terms of the end user license agreement, as included below, govern the use of the Product Software, including any differing limited warranty terms, exclusions and limitations, which shall control over the terms and conditions set forth in the limited Product warranty.

Warranty Remedies

If the Trimble Product fails during the warranty period for reasons covered by this limited warranty and you notify Trimble of such failure during the warranty period, Trimble will repair OR replace the nonconforming Product with new, equivalent to new, or reconditioned parts or Product, OR refund the Product purchase price paid by you, at Trimble’s option, upon your return of the Product in accordance with Trimble's product return procedures then in effect.

How to Obtain Warranty Service

To obtain warranty service for the Product, it is recommended you contact your Trimble dealer. Alternatively, you may contact Trimble to request warranty service by emailing Repair_Services@Trimble.com. Please be prepared to provide:

– your name, address, and telephone numbers;

– product name, part number and serial number;

– proof of purchase;

– an explanation of the problem.

The customer service representative may need additional information from you depending on the nature of the problem.

Warranty Exclusions and Disclaimer

This Product limited warranty shall only apply in the event and to the extent that (i) the Product is properly and correctly installed, configured, interfaced, maintained, stored, and operated in accordance with Trimble's applicable operator's manual and specifications, and; (ii) the Product is not modified or misused. This Product limited warranty shall not apply to, and Trimble shall not be responsible for, defects or performance problems resulting from (i) the combination or utilization of the Product with hardware or software products, information, data, systems, interfaces, or devices not made, supplied, or specified by Trimble; (ii) the operation of the Product under any specification other than, or in addition to, Trimble's standard specifications for its products; (iii) the unauthorized installation, modification, or use of the Product; (iv) damage caused by: accident, lightning or other electrical discharge, fresh or salt water immersion or spray (outside of Product specifications); or exposure to environmental conditions for which the Product is not intended; (v) normal wear and tear on consumable parts (e.g., batteries); or (vi) cosmetic damage. Trimble does not

warrant or guarantee the results obtained through the use of the Product or Software, or that software components will operate error free.

NOTICE REGARDING PRODUCTS EQUIPPED WITH TECHNOLOGY CAPABLE OF TRACKING SATELLITE SIGNALS FROM SATELLITE BASED AUGMENTATION SYSTEMS (SBAS) (WAAS, EGNOS, GAGAN, MSAS AND LUCH), OMNISTAR, BEIDOU, GPS, GALILEO OR GLONASS SATELLITES, OR FROM IALA BEACON SOURCES: TRIMBLE IS NOT RESPONSIBLE FOR THE OPERATION OR FAILURE OF OPERATION OF ANY SATELLITE BASED POSITIONING SYSTEM OR THE AVAILABILITY OF ANY SATELLITE BASED POSITIONING SIGNALS.

THE FOREGOING LIMITED WARRANTY TERMS STATE TRIMBLE'S ENTIRE LIABILITY, AND YOUR EXCLUSIVE REMEDIES, RELATING TO THE TRIMBLE PRODUCT. EXCEPT AS OTHERWISE EXPRESSLY PROVIDED HEREIN, THE PRODUCT, AND ACCOMPANYING DOCUMENTATION AND MATERIALS ARE PROVIDED "AS-IS" AND WITHOUT EXPRESS OR IMPLIED WARRANTY OF ANY KIND, BY EITHER TRIMBLE OR ANYONE WHO HAS BEEN INVOLVED IN ITS CREATION, PRODUCTION, INSTALLATION, OR DISTRIBUTION, INCLUDING, BUT NOT LIMITED TO, THE IMPLIED WARRANTIES OF MERCHANTABILITY AND FITNESS FOR A PARTICULAR PURPOSE, TITLE, AND NONINFRINGEMENT. THE STATED EXPRESS WARRANTIES ARE IN LIEU OF ALL OBLIGATIONS OR LIABILITIES ON THE PART OF TRIMBLE ARISING OUT OF, OR IN CONNECTION WITH, ANY PRODUCT. BECAUSE SOME STATES AND JURISDICTIONS DO NOT ALLOW LIMITATIONS ON DURATION OR THE EXCLUSION OF AN IMPLIED WARRANTY, THE ABOVE LIMITATION MAY NOT APPLY TO YOU.

Limitation of Liability

TRIMBLE'S ENTIRE LIABILITY UNDER ANY PROVISION HEREIN SHALL BE LIMITED TO THE AMOUNT PAID BY YOU FOR THE PRODUCT. TO THE MAXIMUM EXTENT PERMITTED BY APPLICABLE LAW, IN NO EVENT SHALL TRIMBLE OR ITS SUPPLIERS BE LIABLE FOR ANY INDIRECT, SPECIAL, INCIDENTAL, OR CONSEQUENTIAL DAMAGE WHATSOEVER UNDER ANY CIRCUMSTANCE OR LEGAL THEORY RELATING IN ANYWAY TO THE PRODUCTS, SOFTWARE AND ACCOMPANYING DOCUMENTATION AND MATERIALS, (INCLUDING, WITHOUT LIMITATION, DAMAGES FOR LOSS OF BUSINESS PROFITS, BUSINESS INTERRUPTION, LOSS OF DATA, OR ANY OTHER PECUNIARY LOSS), REGARDLESS OF WHETHER TRIMBLE HAS BEEN ADVISED OF THE POSSIBILITY OF ANY SUCH LOSS AND REGARDLESS OF THE COURSE OF DEALING WHICH DEVELOPS OR HAS DEVELOPED BETWEEN YOU AND TRIMBLE. BECAUSE SOME STATES AND JURISDICTIONS DO NOT ALLOW THE EXCLUSION OR LIMITATION OF LIABILITY FOR CONSEQUENTIAL OR INCIDENTAL DAMAGES, THE ABOVE LIMITATION MAY NOT APPLY TO YOU.

NOTE: THE ABOVE TRIMBLE LIMITED WARRANTY PROVISIONS WILL NOT APPLY TO PRODUCTS PURCHASED IN THOSE JURISDICTIONS (E.G., MEMBER STATES OF THE EUROPEAN ECONOMIC AREA) IN WHICH PRODUCT WARRANTIES ARE THE RESPONSIBILITY OF THE LOCAL DEALER FROM WHOM THE PRODUCTS ARE ACQUIRED. IN SUCH A CASE, PLEASE CONTACT YOUR TRIMBLE DEALER FOR APPLICABLE WARRANTY INFORMATION.

Notice to Australian Purchasers - The Australian Consumer Law

Our goods come with guarantees that cannot be excluded under the Australian Consumer Law. You are entitled to a replacement or refund for a major failure and for compensation for any other reasonably foreseeable loss or damage. You are also entitled to have the goods repaired or replaced if the goods fail to be of acceptable quality and the failure does not amount to a major failure.

Trimble's warranty, as set out in the user manual accompanying this statement, or as described in the warranty card accompanying the Product you purchased, is in addition to any mandatory rights and remedies that you may have under the Australian Consumer Law.

Official Language

THE OFFICIAL LANGUAGE OF THESE TERMS AND CONDITIONS IS ENGLISH. IN THE EVENT OF A CONFLICT BETWEEN ENGLISH AND OTHER LANGUAGE VERSIONS, THE ENGLISH LANGUAGE SHALL CONTROL

Contents

Legal information 2
Copyright and trademarks 2
Global technical support 2
Release Notice 2
Recycling information 2
Regional compliance 3
Limited Warranty Terms and Conditions 9

Trimble TSC510 controller introduction 15
Registration 15
Configuration options 16
In the box 16
Replacement and spare or optional accessories 16
Parts of the TSC510 controller 18
Product specifications 19

Safety information 22
Battery safety 22
Power supply safety 23
Touchscreen glass 23
Service safety 24
Safe environments of use 24
Hearing damage 24
Distraction 24
Telecommunications & Internet Association (TIA) 24
Specific Absorption Rate (SAR) 25
Caring for your device 25

Setting up the device 27
Inserting a SIM card (optional) 27
Installing and removing the optional accessory battery pack 28
Tethering the stylus 29
Installing a screen protector 30
Attaching the pole bracket (optional) 31
Attaching the handstrap 32
Attaching an Empower module (optional) 33

Getting started: basic operation 34

Charging the device for the first time 34
Turning the device on or off, using Sleep mode or Shelf mode 35
Checking the battery charge levels and LED status 36
Charging the internal batteries and the optional removable battery pack 42
Making your battery last longer 43
Using the touchscreen 44
Display settings: adjusting the backlight 47
Display settings: rotation lock 48

Using the integrated keyboard 49
Main keyboard keys 49
Configuring built-in keyboard settings 52
Keyboard status LEDs 54

Using the Android operating system 56
Using Accounts 56
The Android interface 57
Using the pre-installed Google apps and other apps 60
Getting more apps 62

Using wireless networks 63
Working with Wi-Fi networks 63
Working with mobile broadband 65
Using NFC (Near Field Communications) 66
Airplane mode 67

Working with GNSS 68

Using the compass 69
Calibrating the compass 69

Using accessories and connecting to other devices 70
Connecting to USB accessories 70
Connecting to Bluetooth accessories 72
Connecting to RS-232 peripherals 73
Transferring data between your TSC510 controller and another computer 74
Using Trimble Empower modules 75

Using the camera 77
Enable the Camera app to access your location to geo-tag photos 78

Changing camera settings 78

Troubleshooting **79**
Further assistance and support with the Android operating system 79
Performance issues 79
Empower module issues 81
Wireless connectivity issues 82
Compass accuracy issues 82
Power and battery issues 82
Restarting or resetting the operating system 84
Operating system and software updates 85
Repairing your device 85

1

Trimble TSC510 controller introduction

This user guide describes how to configure and use the Trimble TSC510 controller powered by the Android™ operating system. The information in this user guide supplements the information in the Quick Start Guide. Trimble recommends that you spend some time reading this user guide to learn about the special features of the product.

WARNING – Before you use this product, make sure that you have read and understood all safety requirements. Failure to follow these safety instructions could result in fire, electric shock, or other injury, or damage to the device and/or other property. For more information refer to Safety information, page 22 of this guide.

Operating system, firmware, and BIOS downloads

To download the latest operating system, firmware, BIOS, and driver packages for your device, go to mcs.trimble.com.

On the downloads portal, you will also find brief release notes and installation instructions.

Registration

To receive information regarding updates and new products, contact your local dealer or go to mytrimbleprotected.com. When you register your device, you can select the newsletter, upgrade, or new product information.

To register your device, you will need the serial number—a unique 12 digit number for your TSC510 controller (for example, JAJ201300096)

The serial number (along with the Regulatory label) is on a label inside the SIM card compartment on the back of the device; see Inserting a SIM card (optional), page 27 for instructions on removing the compartment cover.

Configuration options

The TSC510 controller is powered by the Android operating system, and has a built-in alpha-numeric keyboard, integrated Wi-Fi, Bluetooth® wireless technology, and worldwide LTE Cellular WWAN connectivity (data only).

For a full list of product features and their specifications, refer to Product specifications, page 19, or contact your local reseller for information.

In the box

A standard pack-out has the following items:

- A TSC510 controller
- Glass Screen Protector with Anti-UV AB Adhesive. The screen protector package includes the screen protector in a foam sleeve, and a sealed yellow pack containing:
  - 70% Isopropyl Alcohol prep pad
  - grey lint-free cleaning cloth
  - blue lint/dust removal sticker
- 2 m (6.56 feet) USB-Type C (male) to USB-Type C (male) USB 3.0 cable for charging and data transfer
- Capacitive stylus with integrated cross-tip and flat-tip screwdrivers, tether, and 2 stylus tips
- Handstrap
- Protective soft carry case

Replacement and spare or optional accessories

WARNING – Only Trimble approved accessories should be used with this product. Failure to use Trimble approved accessories could result in fire, electric shock, or other injury, or damage to the handheld computer and/or other property. For more information refer to Safety information, page 22.

A wide range of replacement and optional accessories are available to purchase for the TSC510 controller, including:

- AC power supply with regional plugs and USB-C port
- USB-C to USB-C cable for charging and data transfer

- Tempered glass screen protector
- Capacitive stylus with tether, 2 stylus tips
- Pack of 5 replacement stylus tips
- Handstrap
- Protective pouch
- Removeable, rechargeable accessory battery pack to double battery run-time
    - Compatible with the TSC510 controller USB-C power supply and USB-C to USB-C cable
- USB-A to USB-C cable
- USB-C to USB-A adapter
- USB-C vehicle charger
- TSC510 controller pole mount bracket
- Quick release pole mount clamp
- Shoulder sling

Trimble Empower modules

The following Empower modules are also available:

- Trimble EM120 2.4GHz radio module
- Trimble EM130 Halow radio
- Trimble EM940/450 GNSS radio

Other modules may be available. Check with your local dealer for more information.

Parts of the TSC510 controller

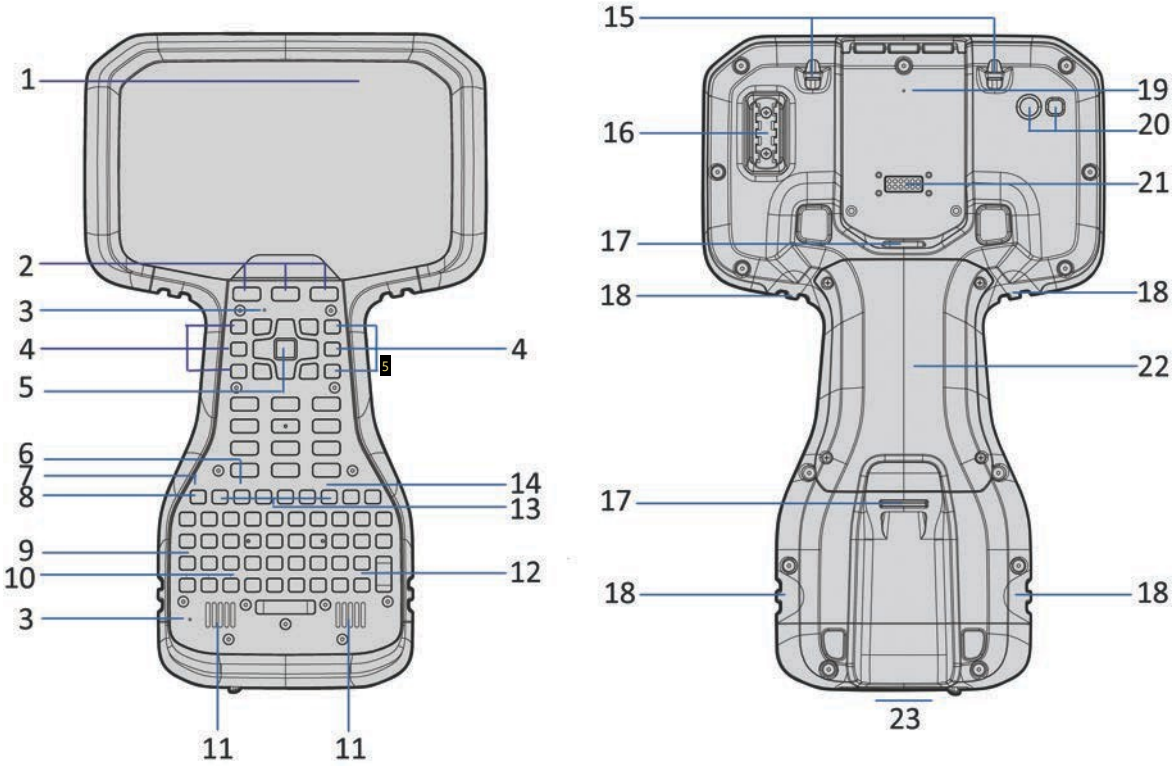

1	Ambient light sensor
2	Android keys
3	Microphone (x2)
4	Function keys (F1 - F3, F4 - F6)
5	OK and directional keys
6	CAPS lock LED
7	Battery charging LED
8	Power key
9	Shift LED
10	LEDs left to right; Fn, Ctrl, Search
11	Speakers (x2)
12	AGr LED
13	Function Keys (F7 - F12)
14	Cursor lock LED
15	Stylus tether points
16	Stylus holder
17	Pole mount latches (x2)
18	Handstrap connector points (x4)
19	Gore Vent: **DO NOT COVER!**
20	Camera & camera flash
21	Trimble Empower module bay
22	Cover for battery pack & SIM card slot
23	USB-C port, bottom of device under port cover

Product specifications

Physical	Size: 287 mm × 175.1 mm x 43.8 mm Weight: 934 g excluding optional removable battery, Empower module, pole bracket and other accessories Housing: Sabic LNP D351+ BASF 1170A11U overmold
Operating System	Android 14
Processor	Qualcomm QCS6490
RAM	8 GB LPDDR
User Storage	128 GB UFS Flash Memory
Display	5″ landscape HD (1280x720 px) 365 DPI display 800 cd/m² sunlight readable LED backlight, projective capacitive multi-touch touchscreen with stylus, finger, and glove modes
Keyboard	International backlit alpha-numeric and QWERTY with Fn keys (11 physical + multiple Fn, Shift & AGr key combinations)
Notification LED	Battery status, Shift, Fn, Ctrl, AGr, Caps Lock, Search, and Cursor Lock LED indicator
I/O	USB-C for charging and USB 3.1 Gen 1 data transfer USB-PD 2.0 supports charger inputs up to 5 V, 9 V, 12 V / 3 A Display port alternate mode via USB Type-C
Battery & Power	Internal Li-Ion 4600 mAh/7.2 V nominal capacity with optional user replaceable Li-Ion battery pack Battery Life: RTS usage 10 hours or GNSS RTK usage 10 hours (Depending on display settings, connectivity, data processing, ambient temperature, etc.) Charging Time: Full-charge 3.5 hours, 0–50 % charge in 1.5 hours • If the optional removable accessory battery pack is installed (see Installing and removing the optional accessory battery pack, page 28),

	the total time to fully charge both internal and accessory batteries, when in an empty state, is approximately 8 hours. Power Input: 5 V, 9 V, 12 V / 3 A charging, USB-PD 2.0 compliant with Type C connector
Audio	Mono speaker and dual microphones with noise-canceling technology
External speaker / microphone	USB-C or Bluetooth headsets supported
Camera	Rear camera: 16 MP auto-focus with LED flash
GNSS	Integrated Sierra Wireless EM7590 | Dual Frequency L1 C/A, GPS, GLONASS, BeiDou, Galileo, QZSS | 4M Horizontal RMS in good conditions
Bluetooth	Bluetooth 5.2, BLE 5, Class 1
Wi-Fi	Wi-Fi® 6, 2.4 GHz (802.11 b/g/n/ax) & 5.0 GHz (802.11 a/n/ac/ax)
NFC	(Near Field Communications) NFC NXP PN-7160, Reader/Writer Mode.
Mobile broadband / WWAN (optional)	Worldwide LTE 4G & UMTS 3G in regions where it is available AT&T and Verizon certified. NanoSIM card.
Sensors	Ambient light sensor, e-Compass, accelerometer, gyro sensor, temperature sensors, power/current sensor
Environmental Certifications	Conflict Minerals, EU RoHS 2.0, EU REACH
Safety Certifications	US/CA , EU (CB), AUS/NZ (AS/NZS), India (BIS), S. Africa,Taiwan (BSMI), UAE (UAB.S IEC60950)
EMI/EMC Certifications	CE, FCC/IC, C-Tick, BSMI
ESD Certifications	IEC 61000-4-2, Level 4, 8KV contact and 15KV air
RF Certifications	PTCRB, AT&T OTA, Verizon OTA, Wi-Fi RSE & SAR
Regional Compliance	US (FCC), Canada (ISED), EU (CE), UK (CE), Australia (C-tick, A-tick), New Zealand (C-tick, A-tick), Japan (MIC), Thailand (NBTC), South Korea (KCC), Taiwan (NCC), UAE United Arab Emirates, Mexico, Brazil (ANATEL), India, South Africa (ICASA)
Security	Secure boot with hardware fuse protection Qualcomm Trusted Execution Environment (QTEE) Device encryption Camera security - Hardware-based camera biometrics protects against malware attacks Quarterly Android security patches provided until December 202x

Rugged Specifications

IEC-529: Independently tested and certified for:

- Water Ingress Protection: IPx8
- Sand & Dust Ingress Protection: IP6x

MIL-STD-810H: Independently tested and certified for:

- Operating temperature: -30 °C to +60 °C (–22 °F to +140 °F)
- Storage temperature: -40 °C to +70 °C (–40 °F to +158 °F)
- Startup temperature: –20 °C to +60 °C (–4 °F to +140 °F)
- Charging (AC adapter) temperature: 0 °C to +45 °C (+32 °F to +113 °F)
- Temperature shock: survives cycles between –30 ºC and +60 ºC (–22 ºF and +140 ºF)
- Humidity: 90% RH temp cycle +30 °C / +60 °C (+86 °F / +140 °F)
- Vibration: General Minimum Integrity and Loose Cargo Test
- High altitude (low pressure)
  - Operation 9,144 m (30,000 ft) at +5 ºC (+41 ºF)
  - Storage 12,192 m (40,000 ft) at -30 ºC (-22 ºF)
  - Rapid Decompression 2,438 m (8,000 ft) to 12,192 m (40,000 ft) in <15 seconds at +25 °C (+77 °F)
- Drop / Shock protection:
  - 26 drops (each face, edge & corner) at room temperature from 1.22 m (4 ft) onto plywood and concrete
  - 6 faces at low and high temps (-30 °C and +60 °C) (-22 °F and +140 °F)
  - Ball drop similar to IEC 60950-1, 50 mm steel ball dropped 0.5 m on touch panel only—5 drops, center and 4 corners
- Solar Radiation Exposure: MIL-STD-810H, Method 505.7, Procedures I & II. Survives prolonged solar exposure
- Salt Spray: ASTM B117 5% salt solution, 96 hrs

CAUTION – The device has an IP rating of IP68, predicated on the battery door being properly installed. If the battery door is removed, then the IP rating drops to IP54. Please be aware of the lowered rating. As such, care should be taken when opening the battery door to keep water and debris out of the enclosure.

Configuration Options: Empower Modules

x 2 Empower module bays support:

	• EM120 2.4 GHz Receiver Module • EM113 Radio Module • EM940 Radio Module • EM450 UHF Radio Module • Additional modules as they become available
Compatible Field Software	Android 14 applications Trimble Access™ software version 2024 and later Trimble Siteworks Positioning System version 1.40 and later

Safety information

This section contains important safety information that applies to the Trimble TSC510 controller that you have purchased. Failure to follow instructions and properly set up, use, and care for this product can increase the risk of serious injury or death, or damage the device or devices.

Battery safety

Lithium-Ion batteries are classified by the U. S. Federal Government as non-hazardous waste and are safe for disposal in the normal municipal waste stream. These batteries contain recyclable materials and are accepted for recycling. Dispose of used batteries in accordance with local regulations.

WARNING – Non-approved batteries will not function in the device. Use only the battery for the system for which it was specified. Only use the battery with a charging system that has been qualified with the system per this standard. Use of an unqualified battery or charger may present a risk of fire, explosion, leakage, or other hazard.

WARNING – There are no user-serviceable parts in the batteries. Do not disassemble or open, crush, bend or deform, puncture, or shred the battery. Do not modify or remanufacture, attempt to insert foreign objects into the battery, immerse or expose to water or other liquids, or expose to fire, explosion, or other hazard. Do not expose to temperatures above +70 °C (+158 °F).

WARNING – Improper battery use may result in a fire, explosion, or other hazard.

- Do not short circuit a battery or allow metallic or conductive objects to contact the battery terminals.
- Avoid dropping the device or battery. If dropped, especially on a hard surface, and the user suspects damage to the battery, take it to a service center for inspection.
- In the event of a battery leak, do not allow the liquid to come in contact with the skin or eyes. If contact has been made, wash the affected area with large amounts of water and seek medical advice.
- Battery usage by children should be supervised.

Power supply safety

WARNING – Use only AC and vehicle adapters intended for the device. Other external power sources may damage your product and void the warranty.

- Ensure the input voltage on the adapter matches the voltage in your location. Ensure the adapter has prongs compatible with your outlets.
- The AC power supply is designed for indoor use only. Avoid using the AC power supply in wet areas.
- Unplug the power supply from power when not in use.
- Do not short the output connector.

Touchscreen glass

CAUTION – The touchscreen on this device is made of glass. This glass could break if the device is dropped on a hard surface or receives a significant impact. If the glass chips or cracks, do not touch or attempt to remove the broken glass. Cracked or chipped glass due to misuse or abuse is not covered under the product's limited warranty.

Service safety

WARNING – Do not attempt to take apart, open, service, or modify the product, accessories, or power supply. Doing so could present the risk of electric shock or other hazard. Any evidence of any attempt to open and/or modify this device, including any peeling, puncturing, or removal of any of the labels, will void the Limited Warranty.

Safe environments of use

WARNING – Areas with potentially explosive atmospheres are often, but not always, posted and can include fueling areas, such as below decks on boats, fuel or chemical transfer or storage facilities, or areas where the air contains chemicals or particles, such as grain dust, or metal powders. When you are in such an area, turn off your mobile device, and do not remove or install battery chargers, AC adapters, or any other accessory. In such areas, sparks can occur and cause an explosion or fire.

Hearing damage

WARNING – To prevent possible hearing damage, do not listen to high volumes for long periods.

Distraction

WARNING – Using the device in some circumstances can distract you and may cause a dangerous situation. Observe rules that prohibit or restrict the use of mobile devices (for example, avoid operating the device while driving a vehicle).

Telecommunications & Internet Association (TIA)

Hearing Aids: Some digital wireless devices may interfere with some hearing aids. In the event of such interference, you may want to consult your service provider, or call the customer service line to discuss alternatives.

Pacemakers and Other Medical Devices: The Health Industry Manufacturers Association recommends a minimum separation of six inches be maintained between a handheld wireless device and a pacemaker to avoid potential interference with the pacemaker. These recommendations are consistent with the independent research by and recommendations of Wireless Technology Research. Persons with pacemakers

should use the ear opposite the pacemaker to minimize the potential for interference. If you have any reason to suspect that interference is taking place, turn the device OFF immediately.

If you use any other personal medical device, consult the manufacturer of your device to determine if they are adequately shielded from external RF energy. Your physician may be able to assist you in obtaining this information.

Turn the device OFF in health care facilities when any regulations posted in these areas instruct you to do so. Hospitals or health care facilities may be using equipment that could be sensitive to external RF energy.

Specific Absorption Rate (SAR)

This device complies with FCC and CE standards when used as designed.

SAR is measured with this device at a separation of 10 mm to the body, while transmitting at the highest certified output power level in all frequency bands of this device. Keep this device at least 10 mm away from your body to ensure exposure levels remain at or below the as-tested levels.

Caring for your device

Cleaning

Turn off the device, and disconnect it from external power. Use a soft, dampened cloth with either water or a diluted mild detergent. If a mild detergent is used, ensure all soap residue is removed. Do not use chemical cleaners.

Touchscreen care

The TSC510 controller is extremely rugged, and is designed to withstand extreme conditions and harsh treatment, however taking proper care of the touchscreen will prolong the life and ensure optimal display performance of the touchscreen of this product. Excessive or prolonged exposure to abrasives, oil, dust, chemicals, and ultraviolet light can affect the performance of your touchscreen over time.

To help protect the screen:

- **Clean it frequently.** Use a soft, lint-free cloth to wipe the screen. You can dampen the cloth with water or an eyeglass cleaner. If the display is very dirty, it can be washed off under a gently running tap.

  > **WARNING –** Make sure that all ports and doors are fully closed, and that the device is not connected to an external power supply. Do not use chemical or abrasive cleaners.

- **Keep it covered when not in use.** Store the TSC510 controller in a carry case or pouch while you are in transit or not using it.

- **Keep it out of the sun when not in use.** Do not store the TSC510 controller in direct sunlight for a long time unnecessarily. Ultraviolet light and excessive heat from sun-loading heat can damage the display.
- **Use proper touchscreen tools**. Use either fingers or the TSC510 controller's stylus, or other devices specifically designed for use with capacitive touchscreens to operate the touchscreen of this device. The use of ballpoint pens, metal tools or other sharp objects to operate the touchscreen may scratch and/or damage the surface of the touchscreen.
- **Avoid drops, tumbles, and abrasives**. The TSC510 controller is designed to resist damage for drops up to 122 cm (4 feet). However, you should protect the display from impact, pressure, and abrasive substances that can scratch it or crack it. The device should not be dropped unnecessarily. Use the screen protectors to keep the touchscreen clean and protected, following the instructions provided on the screen protector packaging.

Battery care

CAUTION – The device has an IP rating of IP68, predicated on the battery door being properly installed. If the battery door is removed, then the IP rating drops to IP54. Please be aware of the lowered rating. As such, care should be taken when opening the battery door to keep water and debris out of the enclosure.

Use and storage temperature: Lithium-ion batteries are sensitive to high temperatures, so keep the device's batteries out of direct sun for long periods, and do not leave batteries in a hot car, especially on a dashboard in full sun or other environments where temperatures can exceed +70 °C (+158 °F). Battery life can be shortened if stored or operated outside of these temperature ranges. The batteries have a storage temperature rating of –40 °C to +70 °C (–40 °F to +158 °F), however, for maximum battery life, the recommended storage temperature is at room temperature (~+20 °C / +68 °F). When you are using the device or charging the batteries, it is normal for the device and batteries to get warm.

If the interior temperature of the device exceeds normal operating temperatures (for example, in a hot car or in direct sunlight for extended periods of time), you may experience the following as it attempts to regulate its temperature automatically:

- The device stops charging.
- If the device cannot regulate its internal temperature, it may go into a Sleep state until it cools.

Move the device to a cooler location out of direct sunlight and wait a few minutes before trying to use the device again.

Charging: Recharge the battery any time; the battery does not need to be empty or low before you recharge it. However, it is best to let the battery run to below 10 percent at least once a month before you recharge it. Battery recharging is supported at temperatures between 0 °C and +45 °C (+32 °F and +113 °F). Use only the manufacturer designated charging accessories to recharge the batteries.

Other environmental conditions: The TSC510 controller is designed to work in ambient temperatures between -30 °C and +60 °C (-22 °F and +140 °F) and to be stored in temperatures between -40 °C and +70 °C (-40 °F and +158 °F). Avoid exposing the device to dramatic changes in temperature or humidity.

Setting up the device

This section tells you how to set up your TSC510 controller before you start using it.

Inserting a SIM card (optional)

Your TSC510 controller is equipped with a LTE modem. You will need a data plan and Nano SIM card from your local cellular service provider to use cellular data. If you are unsure, check with your mobile operator. See Working with mobile broadband, page 65 for more information.

The TSC510 controller does not support eSIM technology.

CAUTION – Do not replace the SIM card while outdoors. Water, dust, dirt or debris may collect inside the SIM card bay causing performance issues.

CAUTION – The device has an IP rating of IP68, predicated on the battery door being properly installed. If the battery door is removed, then the IP rating drops to IP54. Please be aware of the lowered rating. As such, care should be taken when opening the battery door to keep water and debris out of the enclosure.

CAUTION – The SIM card door can be damaged if handled carelessly or if sharp tools are used to open the door. Take care not to twist or warp the door when opening or closing it.

1. If the device is on, turn it off; press-hold the **Power** key, then tap **Power Off**.
2. Using a cross-tip screwdriver or the one integrated in the stylus, loosen the 4 screws to remove the cover from the back of the device.

   If the accessory battery is installed, remove it to access the SIM card door.
3. Pry open the SIM card door using a coin or the tool located on the stylus tether; do not remove the door completely.

   The door hinges allow for sliding the door out slightly, but the door is not intended to be completely removed.

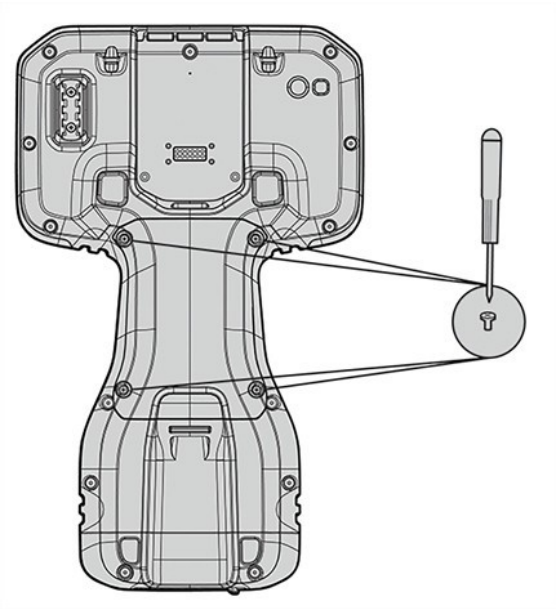

4. Slide the SIM card into the slot in the orientation shown in the SIM enclosure.

5. Close the SIM door, making sure it clicks shut.
6. See the next section to Install the optional accessory battery.
7. Replace the cover and tighten the 4 screws using the cross-tip screwdriver.

Tethering the stylus

Attach the stylus to the device to prevent accidentally dropping the stylus. The stylus is supplied with one end of the tether cord pre-looped to the stylus. You can attach the stylus to the left or the right side of the device.

To tether the stylus to the device:

1. Take the loose end of the tether cord and push it through the left or right stylus tether point.
2. Feed the stylus through the loop and pull tight.
3. Place the stylus in the stylus dock to store it when not in use.

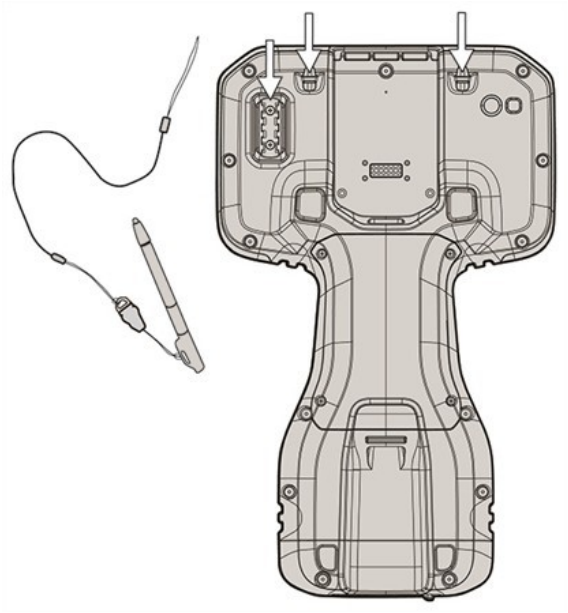

Installing a screen protector

The TSC510 controller is fitted with a mechanically strengthened glass touchscreen which is highly resistant to abrasion and impact damage. However to ensure maximum protection, it is recommended that you use a Trimble-approved glass TSC510 controller screen protector.

To install a screen protector:

1. Place the device on a clean, flat surface. Make sure your hands are clean.
2. Clean the touchscreen with the supplied alcohol wipe.
3. Polish and dry the screen with the lint-free cleaning cloth supplied.
4. Remove any dust specs with the supplied dust sticker.
5. Remove the protective film from the screen protector.
6. Align the screen protector carefully with the screen and let it "drop" into the screen. If you make a mistake and it looks off-center, gently lift the screen protector up and realign it. Once the protector is on the screen, give it a soft press in the center and allow the adhesive surface to grip to the screen naturally.
7. If there are any bubbles remaining, use the cloth provided to gently smooth them toward the edges of the screen protector.

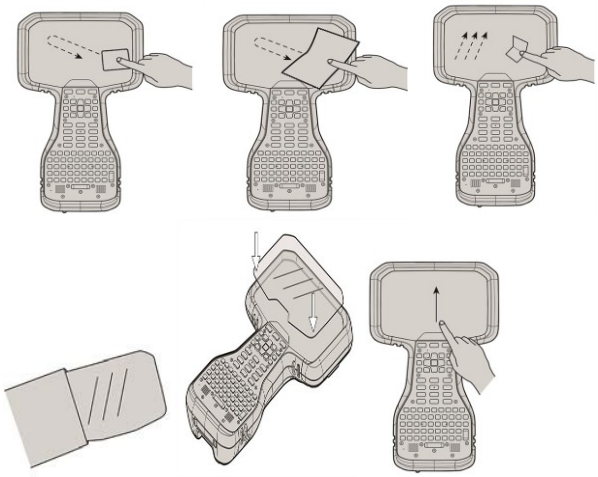

For more information on where to purchase the correct screen protector for your device, contact your local Trimble reseller.

Attaching the pole bracket (optional)

Under 2m high

An optional accessory for the TSC510 controller, the pole mount consists of two parts (sold separately):

- a custom bracket which attaches to the back of the TSC510 controller.

  Use the four supplied screws to screw the bracket on to the back of the TSC510 controller to attach it.

- a pole clamp. This can remain on the pole and still fit in a 4” tube, and has a friction twist grip to easily adjust the angle.

The bracket is designed to stay attached to the controller semi-permenantly; the controller can be comfortably carried and used in the hand even with the bracket installed.

The bracket easily plugs into the pole clamp for quick attachment and release.
You can set up the bracket for either left- or right-hand use by switching the mount stud from one side to the other. It has a detachable stylus holder attachment for temporary stylus storage.

According to your preference, you can attach the bracket to the pole in two positions—one where the controller is more centered and one where the controller is closer to you.

Attaching the handstrap

Attach the handstrap to the left or the right side of the device, according to your personal preference. To ensure a good fit:

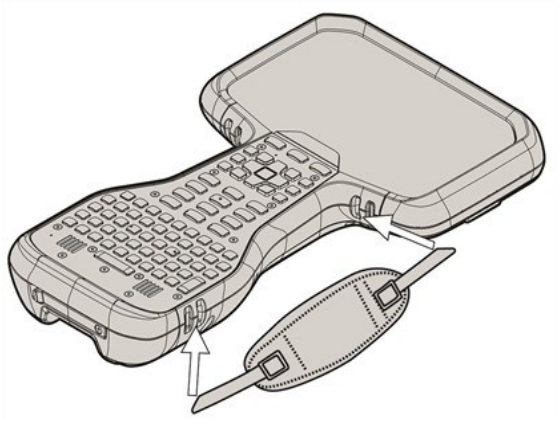

1. Thread one end of the handstrap ribbon through the top handstrap slot; thread from the center of the device toward the top of the device.
2. Pull the end of the ribbon back towards the center of the handstrap and feed it up, over, and down through the lock buckle on the handstrap and pull it tight.
3. Thread the ribbon at the other end of the handstrap through the bottom handstrap slot; thread from the center of the device toward the bottom of the device.

   Pull the end of the ribbon back towards the center of the handstrap and feed it up, over, and down through the lock buckle on the handstrap and pull it as tight as is comfortable for your hand.

   If required, use a small blunt tool to push the ribbons through the handstrap slots on the device. Do not use a sharp tool.

   When using the handstrap, the device should sit firmly in the hand.

Attaching an Empower module (optional)

Before you install or remove a module from the device, make sure the device is powered off or in Sleep state. For more information, see Turning the device on or off, using Sleep mode or Shelf mode, page 35.

You need to re-calibrate the compass after installing or removing an Empower module. For more information, see Using the compass, page 69.

To attach an Empower module to the TSC510 controller:

1. Hook the Empower module onto the back of the device, ensuring that the slots on the top of the device line up with those on the Empower module.
2. Using the Phillips #1 screwdriver, tighten the 2 captive screws at the bottom of the Empower module to secure the module in place. Do not overtighten the screws.

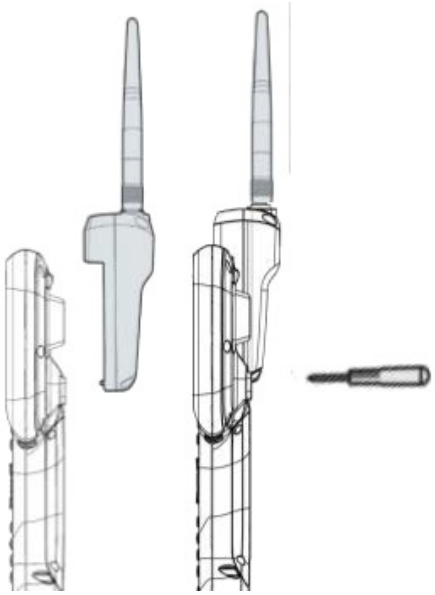

Getting started: basic operation

This section explains some basic features to get you started using the TSC510 controller .

When you start your device for the first time, the Android operating system takes you through some basic setup steps; follow the instructions on the screen.

For more details on setting up and using the Android operating system, see Using the Android operating system, page 56 or go to the Android website.

Charging the device for the first time

All current devices shipped by Trimble are shipped in Shelf mode; the device must be connected with a USB cable and a power adapter into an electrical outlet before the device can be turned on. See Turning the device on or off, using Sleep mode or Shelf mode, page 35 for more information on Sleep mode.

The internal battery and optional user-removable accessory battery pack are charged using the USB-C port directly on the bottom of the device. It takes approximately 3.5 hours to fully charge the device's internal batteries from an empty state using the AC adapter and USB-C to USB-C cable included in the packout. If the optional removable accessory battery pack is installed, the total time to fully charge both internal and accessory batteries, when in an empty state, is approximately 8 hours.

NOTE – It may take longer to charge the batteries if you use third party AC adapters, or PC \ laptop USB Ports.

1. Connect the appropriate international plug adapter for your region to the AC adapter.
2. Connect one end of the USB-C to USB-C cable to the USB-C port located on the AC adaptor.
3. Connect the other end of the USB-C cable to the USB-C port on the TSC510 controller .
4. Plug the power supply into an electrical outlet and charge for 3.5 hours.

Turning the device on or off, using Sleep mode or Shelf mode

NOTE – The first time you turn on the device, the Android operating system takes you through some basic setup steps; follow the instructions on the screen.

The TSC510 controller has four power states:

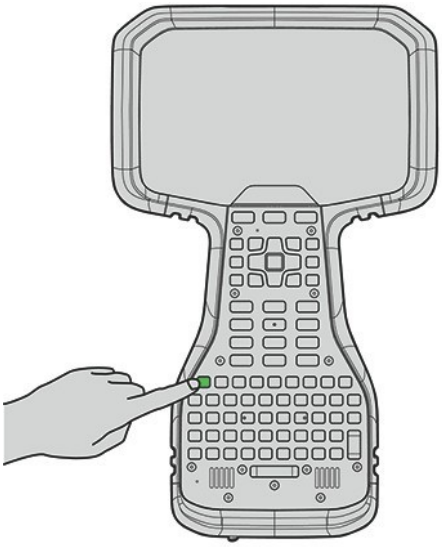

- **On**.
  - If the device is **Off** or in **Sleep** mode, press the **Power** key to turn the device on. The device will turn on and the **Powered by Android** boot screen appears.

    Once your device has been set up, if you have set a PIN, password, or pattern to unlock the device, swipe up on the touchscreen to enter it.
  - If the device is in **Shelf mode**, the device must be connected with a USB cable and a power adapter into a live power source such as a wall socket or mains power before it can be powered on. See **Shelf mode** below.
- **Off**. To turn off the device, do one of the following:
  - press-hold the **Power** key until the **Power** menu appears, then tap **Power Off**.
  - swipe down twice from the top of the screen, then tap the **Power** icon in the bottom right corner of the screen. On the **Power** menu tap **Power Off**.
- **Sleep mode**. If you have not interacted with the TSC510 controller for one minute (default setting), the screen turns off and the device goes into a power-saving Sleep mode. Sleep mode is technically called Android Doze. Doze reduces battery consumption by deferring background CPU and network activity for apps when the device is not in use. The device exits Sleep mode and resumes normal activity as soon as the Power key is pressed or when connected to a charger.
  - To put your device in Sleep mode, briefly press the **Power** key.
  - To wake up your device, briefly press the **Power** key.

  - To set the screen turn-off time, go to **Settings** / **Display** / **Screen timeout**, and select your preferred duration.

- **Shelf mode**. This is a low power mode and is useful when shipping the device or for long term storage. Shelf mode is applied to the smart batteries in the device. If a removable battery is in the device, then the battery is placed in Shelf mode and will remain so until properly powered back up.

  All current devices and removable batteries shipped by Trimble are shipped in Shelf mode. This means that the device or the charger that the battery is placed in must be connected with a USB cable and a power adapter into an electrical outlet to return the battery to normal operation.

  To place the device in Shelf mode, Go to **Settings** / **Battery** / **Shelf Mode Enable**, and select **OK**. Alternatively, press-hold the **Power** key for a couple of seconds to access the option to place the device in Shelf mode. The device will shut down.

  > **NOTE –** If the optional removable accessory battery pack is installed, when you put the device into Shelf mode, the battery pack is also put into a the low power Shelf mode.

Waking and unlocking the device

If the screen is not on, the device could be either in **Sleep mode**, or it could be fully powered **Off**. To

wake the device or turn the device on, briefly press the **Power** key.

Depending on your security settings, your device may be locked. To unlock it, swipe up on the screen then enter your PIN, password, or pattern if required.

Restarting / rebooting the device

If you need to reboot the device, press-hold the **Power** key until the **Power** menu appears, then tap **Restart**.

Checking the battery charge levels and LED status

The TSC510 controller is powered by internal batteries which are not removable, and an optional, user-replaceable accessory battery pack which enables you to double the battery run-time.

If you are using the optional user-replaceable accessory battery pack, you can charge it while installed in the device, or externally.

LED charging status

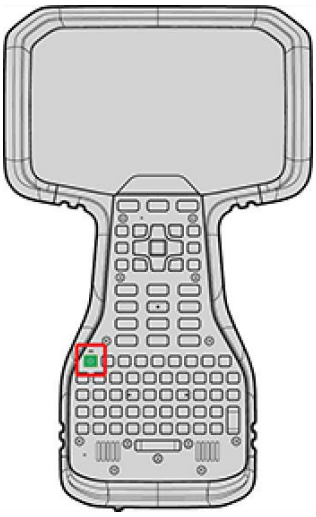

An LED on the keyboard (above the **Power** key) shows the charging status. The charging LED applies to the internal non-removable battery and the optional user-removable battery pack.

- Green: fully charged.
- Amber: charging normally.
- Red: battery charging error. It can take the device approximately 30 seconds to recognize a bad battery and indicate a charging error.

Checking the charge level of the internal batteries and the accessory removable battery pack

You can check the charge level of the internal and the user-replaceable accessory battery pack (if installed) from the **Status** bar (top right corner of the screen).

If there is no accessory removable battery in the device, only one battery icon is shown. If an accessory removable battery is installed correctly, a second battery icon with a small circle in its lower right corner is also shown:

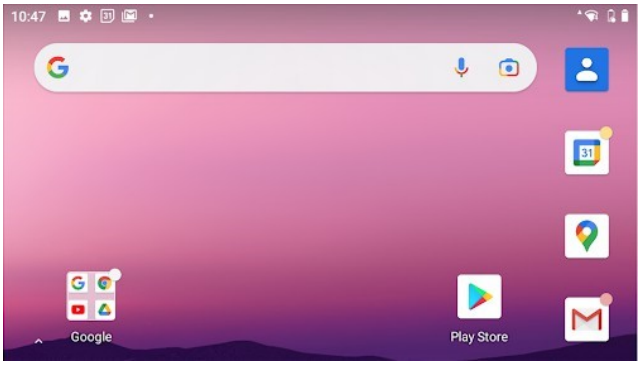

If **Battery percentage** is turned on, each battery icon also shows the battery charge level on the **Status** bar as a percentage.

See Using the Battery settings, page 38 for more information on turning on **Battery percentage**.

To access the detailed battery charge information for the internal batteries and the accessory removable battery pack, swipe down from the top of the display twice to show all **Quick Settings** options, tap the **Settings** icon in the bottom right corner, then tap **Battery**. See Using the Battery settings, page 38 for more information.

Using the Battery settings

To access **Settings**, swipe down from the top of the display twice to show all **Quick Settings** options, tap the **Settings** icon in the bottom right corner, then tap **Battery**. Under **Battery**, the combined percentage charge of the internal batteries and the accessory removable battery is displayed:

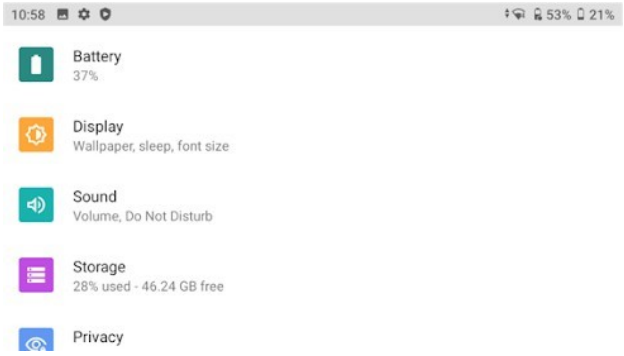

In the image above, at the top of the screen, the removable battery shows a 53% charge and the internal batteries show a 21% charge. There is therefore a 37% combined total charge available.

Fully charged internal batteries will run on average for approximately 9.5 hours (depending on workflow). A fully charged accessory removable battery provides an additional 9.5 hours of battery run-time. If the combined charge is 37%, this means that there is 37% available run-time from the combined estimated total battery run-time of 19 hours; that is, 37% would yield approximately 7 hours of typical run-time.

To access the **Battery settings**, tap **Battery**. The **Battery settings** screen shows the combined charge level of the internal and the accessory removable batteries and their charging status:

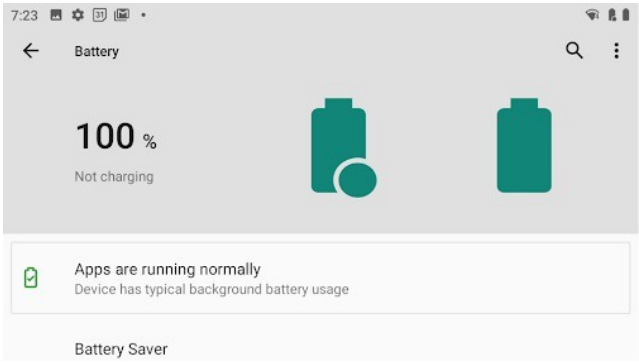

As on the **Status** bar, the battery icons are filled according to their charge level (in the image above, both are 100% charged). For example:

- the **Battery settings** screen below is showing (top right of the screen) 52% charge for the accessory removable battery and 21% charge for the internal battery, with a combined total charge of 36%:

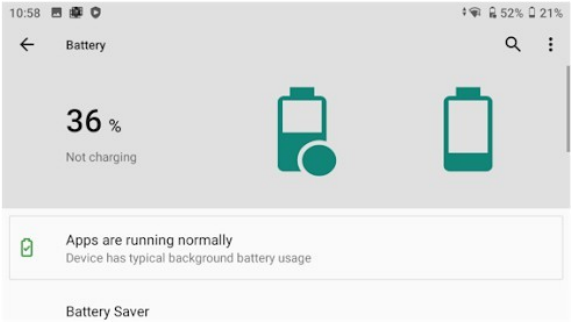

- the **Battery settings** screen below is showing 0% charge for the accessory removable battery and 87% charge for the internal battery, with a combined total charge of 43%:

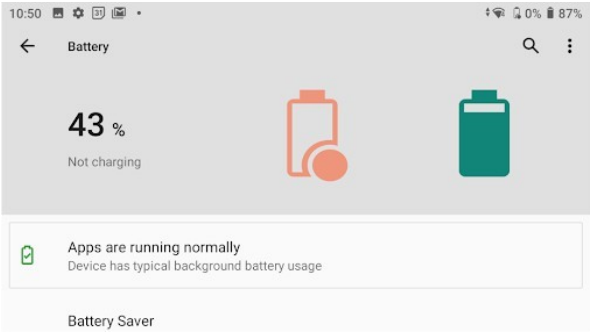

Scroll down to access other settings:

- **Battery usage**
- **Battery Saver**
- **Adaptive Battery**
- **Battery percentage**: Turn on to display the battery charge % level next to the battery icons on the **Status** bar for the internal battery and the accessory battery. This setting is off by default. When turned on, the Battery settings will still show the combined % charge of both the internal and the accessory batteries.
- **Internal Battery**
- **Shelf mode enabled**. This option will turn on Shelf Mode for the internal batteries and the removable battery if it is installed.

Battery charging

- The internal battery always charges first to 100%. Charging then switches to the accessory removable battery.
- A lightning bolt displays on the internal battery icon while the battery is charging. It remains on when the internal batteries are fully charged and the accessory removable battery is charging.

- The accessory removable battery is always used first until drained to 0%; the device then switches to using the internal batteries.
- Under **Battery**, the charge percentage and charge status, including time remaining to full charge, is displayed:

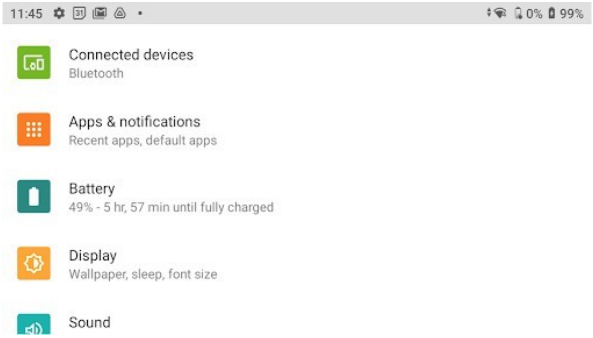

- The following image shows that the internal batteries are charging, as indicated by the lightning bolt on the internal battery icon. This same icon shows on the **Status** bar in the **Battery settings** and on the device's home screen.

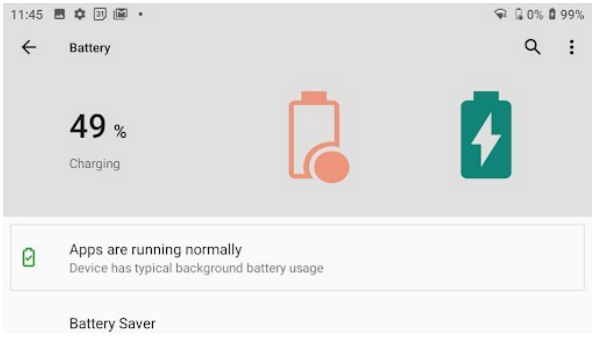

- When the internal battery is 100% charged, the accessory removable battery starts charging. The lightning bolt appears on both battery icons:

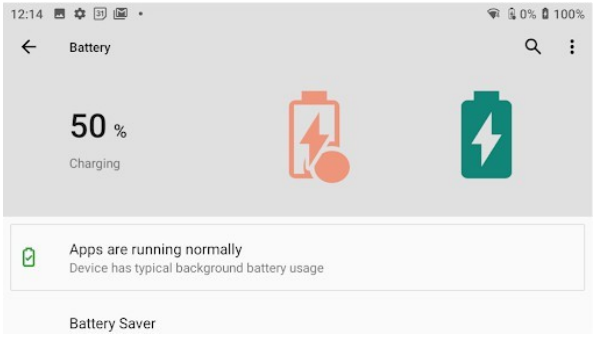

- When both batteries are 100% charged, and the device is still plugged in to main power, both battery icons show as full and both display the lightning bolt:

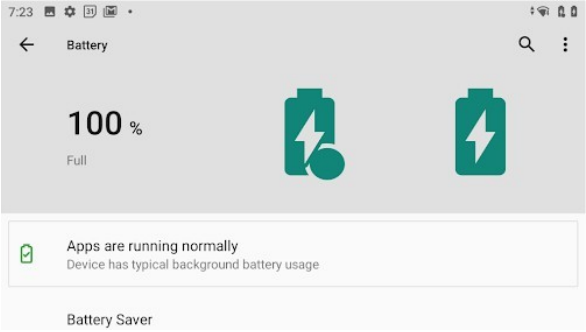

When the device's charger is no longer connected, the batteries appear without the lightning bolt.

Charging the internal batteries and the optional removable battery pack

The internal batteries are charged using the USB-C port directly on the bottom of the device. If you have the accessory removable battery pack installed, it is also charged through the USB-C port.

1. Connect the appropriate international plug adapter for your region to the AC adapter.
2. Connect one end of the USB-C to USB-C cable to the USB-C port located on the AC adaptor.
3. Connect the other end of the USB-C cable to the USB-C port on the TSC510 controller.
4. Plug the power supply into an electrical outlet.

The internal TSC510 controller batteries will charge first. When the internal batteries are fully charged, the optional removable accessory battery pack, if installed, will charge.

It may take longer to charge the batteries if you are using your device for power-intensive activities, for example using GNSS or processing a lot of data while you are charging it.

Making your battery last longer

The Android operating system includes a number of features to help you get the maximum run time out of your battery. Here are some practical suggestions that you can do to maximize the operating time of the battery:

- **Use Battery Saver mode** to help the device's battery last longer when it is running low. This mode turns off or restricts background activity, some visual effects and other high-power features to extend battery life. To turn on **Battery Saver** mode:

  a. Swipe down from the top of the screen to access **Quick Settings**.

  b. Tap **Battery Saver**, then tap **Turn On**.

  When **Battery Saver** mode is on, the battery icon in the **Status** bar is red.

  > **NOTE –** The **Battery Saver Quick Settings** button may not be on the first **Home** screen, so swipe left to access it.

  > **NOTE –** Battery Saver turns off automatically when your device is charging.
  >
  > **NOTE –** - Battery Saver does not stop position data coming through from location services.

- **Keep Battery optimization on**. To have apps use your device's battery only when they need to, keep **Battery optimization** on for all apps. **Battery optimization** is on by default. You can also set **Battery optimization** on individual applications.

  To specify battery optimization for any apps, go to **Settings** / **Battery** / **Battery usage**. Tap on any app in the list to view options.

  > **NOTE –** If you haven't had any apps running, no apps will be listed here.

  Under **MANAGE BATTERY USAGE**, you can view or select **Background restriction** and **Battery optimization**.

  - **Background restriction**. To save battery charge, tap **Background restriction** and then select **RESTRICT**. This stops the app from using battery charge in the background. Note that this may cause apps to work improperly and cause delayed notifications.
  - **Battery optimization**. Most apps will have the **Optimizing battery use** setting enabled by default. Tap this option to view apps that are not optimized. Select **All apps** from the dropdown next to **NOT OPTIMIZED** to view all apps. Select an app from the list to turn **Battery optimization** on or off. Turning off is not recommended, as it may drain the battery more quickly as the app will no longer be restricted from using background battery.

- **Stretch a low battery's power**. To help a dying battery last until you can charge it, first turn on **Battery saver** mode. Often, battery saver is all you'll need for a low battery's power to last until you can get to a charger. Stretch your remaining battery power with temporary changes to your settings/usage.

TIP – Turn the features back on when you have charged the battery.

  - **Avoid high-drain activities**; for example, heavy screen use, heavy data processing.
  - **Turn off the wireless radios** when not using them to limit connectivity; for example, turn on Airplane mode, turn off Bluetooth. See Using wireless networks, page 63.
  - **Limit location data**; for example, turn on GPS battery saving mode, turn off Location services.
  - **Limit automatic syncing**; for example, turn off auto-sync for your Google account, turn off auto-sync for certain Google apps.
- **Unplug USB devices**. Many USB devices use power just by being connected. If you use a USB flash drive, unplug it when you are not using it.
- **Turn off Empower modules** if you will not be using them for a prolonged period; see Powering modules in the Empower Hub, page 76.
- **Decrease the display brightness** to the lowest comfortable level.See Display settings: adjusting the backlight, page 47 for more information.
- **Turn off screen rotation**.See Display settings: rotation lock, page 48 for more information.
- If you don't work in low light settings, **disable the keypad backlight**. Go to **Settings** / **System** / **Languages & input** / **Physical keyboard** / **Built-in Keyboard**. Tap the slider next to **Enable** to disable the keyboard backlight.

  You can also adjust the brightness of the keyboard backlight by moving the **Backlight brightness** slider left or right.
- **Turn off the device** when you are not using it. See Turning the device on or off, using Sleep mode or Shelf mode, page 35.
- **Reduce the length of time before the operating system turns off the display**. To further save battery power, ensure the device settings are configured to turn off the screen when you haven't used it for a length of time. See Turning the device on or off, using Sleep mode or Shelf mode, page 35.

Using the touchscreen

Your TSC510 controller can be easily operated with the touchscreen (using your fingers, a stylus, or a glove), a mouse, an onscreen keypad, or the full built-in keyboard. You can easily switch between any of these input methods.

When using the device in the rain, Trimble recommends that you use Finger mode, with a screen protector installed. The stylus does not work in the rain.

Switching between finger, glove and stylus mode

To select or switch between Finger, Glove, and Stylus mode:

1. Swipe down from the top of the screen to access **Quick Settings**.
2. Tap the **Touch Mode** Quick Setting to cycle through Finger mode, Glove mode, or Stylus mode.

Main touchscreen input gestures and functions supported on the TSC510 controller

The table below describes the main touchscreen input gestures and functions supported on this device.

Tap	Tap once on something.	Opens/executes the action of what you tap on. To enter text, tap where you want to type. If you have enabled an onscreen keypad, it will display. By default, entering text is done using the physical keyboard.
Press- hold	Press-hold your finger or the stylus down for a few seconds.	Shows a menu with options related to what you're doing (like right-clicking with a mouse). On the pop-up menu that appears, tap the action you want to perform.
Double-tap	Double-tap on something.	Tap quickly twice on a webpage, map, or other screen to zoom. Double-tapping after pinching to zoom in some apps, such as Browser, reflows a column of text to fit the width of the screen.
Slide / swipe	Slide / swipe your finger or the stylus across the screen.	Scrolls through what's on the screen. Quickly move your finger across the surface of the screen, without pausing when you first touch it, to scroll a page or a list up or down. Scrolls vertically or horizontally. Swipe a Home screen left or right to see your other Home screens.
Drag	Drag your finger or the stylus across the screen.	Hold your finger or the stylus on an item for a moment and then, without lifting your finger/the stylus, move across the screen until you reach the target position. • Drag in a list to select multiple items. • Drag items on the screen to reposition them.
Pinch / stretch	Pinch your thumb and forefinger together or move	Zooms in or out of a website, map, or picture.

	them apart.	
Rotate	Put two or more fingers on an item and then turn your hand.	Rotate the screen left or right in apps that support it, such as Maps.
Swipe left or right	Swipe left or right on the screen.	Left swipe opens Google search. Right swipe opens other Home screens.
Swipe from top 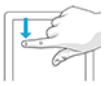	Swipe down from the top of the screen	Displays **Quick Settings** and **Notifications**. Swipe up to close **Quick Settings** and **Notifications**.

Using an on-screen keyboard

You can type on the device using an on-screen keyboard, i.e on the touchscreen. The on-screen keyboard is disabled by default. To turn it on:

1. Go to **Settings** / **System** / **Keyboard** / **On-screen keyboard**.
2. Tap **Gboard**, then under **Languages** make sure the type of keyboard you want (e.g. QWERTY, English (US)) is selected.
3. Tap the **Gboard** slider to toggle the on-screen keyboard on.

When you tap in a text field on the screen, the on-screen keyboard will appear.

To access the on-screen keyboard, tap in a text field, or tap the on-screen keyboard icon in the taskbar. To hide the on-screen keyboard, tap anywhere out of the text field, or tap the on-screen keyboard icon again.

You can still use the physical keyboard while the on-screen keyboard setting is on.

NOTE – Not all applications respond to the on-screen keyboard settings.

Using the stylus

NOTE – Trimble recommends that you use the Trimble TSC710 controller stylus accessory. There are many other capacitive touch styli available that will work with the TSC710 controller as long as they have a rubber tip; however the stylus available as an accessory is tuned for the TSC710 controller display and it fits into the stylus holder. Trimble offers no guarantee that other styli will work.

Take notes, draw, navigate, and mark up documents in your apps using the stylus that comes with your device.

To make a selection, tap the screen once on the item you want to select.

To display a right-click menu, tap and hold an item on the screen, then tap the required menu item.

CAUTION – The stylus does not work in the rain.

Using a USB or Bluetooth mouse and keyboard

You can attach a physical keyboard, mouse and other peripherals to your device via USB or Bluetooth wireless technology. For more information see Using accessories and connecting to other devices, page 70.

Display settings: adjusting the backlight

The TSC510 controller is equipped with a high brightness outdoor readable display. You can easily increase the brightness of the display to increase the readability of the device in bright sunlight conditions, or turn down the brightness to help conserve battery power when working indoors or in dim conditions. You can also have the device automatically adjust the backlight power depending on the ambient light conditions.

Configuring Adaptive brightness

Adaptive brightness is on by default. It uses the ambient light sensor on the device's screen (see Parts of the TSC510 controller, page 18) to adjust your screen brightness depending on the amount of light around you.

To adjust the backlight settings, and turn Adaptive brightness off / on:

1. Open the **Settings** app.
2. Tap **Display**.
3. Tap the setting that you want to change.

Manually adjusting the backlight brightness

1. Swipe down from the **Status Bar** at the top edge of the screen to view the **Quick Settings** bar.
2. Slide the backlight slider left or right to adjust the brightness.

Display settings: rotation lock

The TSC510 controller is equipped with orientation sensors that can detect if your device is in portrait or landscape orientation. The operating system can automatically adjust the display to match your device orientation.

If Auto-rotate is on, the TSC510 controller is constantly monitoring the orientation of the device, and therefore uses more power. Trimble recommends leaving Auto-rotate off unless you have a specific need for it to be on.

1. Swipe down from the top of the screen to display **Quick Settings**.
2. Tap the Auto-rotate **Quick Settings** tile to toggle auto-rotate on or off.

Using the integrated keyboard

The TSC510 controller has a full built-in QWERTY keyboard. The keyboard is similar in most ways to a standard PC keyboard; there are some differences due to the keyboard's small physical size, and some special features have been added to support users' specific requirements.

This section covers how to use the keyboard, and describes the special / non-standard functionality of the keyboard and the associated utilities.

The keyboard controller manages the sticky key operation of all modifier keys.

Main keyboard keys

1	**Android Back key**
2	**Android Home key**

3	**Android Menu key**
4	**App Menu**: App-specific, this launches the menu for the active app; it performs the same function as the menu key that most apps have (giving options for help, about, exit, etc.). It is supported in Trimble Access, but for 3rd party apps it may not do anything.
5	**Function keys F1-F12** These can be configured in the Trimble software according to your requirements. Refer to the Trimble software documentation.
6	**Numeric Keypad, Numeric Keypad Enter key, and Cursor Lock / Num Lock key**: - The **Numeric Keypad** is locked to **Num Lock** by default; the 0 to 9, decimal point ('**.**') and minus ('**-**') keys perform the same as the numeric keyboard on a standard PC keyboard. - The **Numeric Keypad Enter** key performs the same as the numeric keyboard Enter key on a standard PC keyboard. - **Cursor Lock / Num Lock key**. By default, the numeric keypad is locked in **Num Lock** (the LED status icon above the key is OFF). To turn off Num lock and turn on Cursor lock, press the yellow **Fn** key (**10**) and press the **.** key (the decimal point) to change the numeric keypad to a Cursor Navigation state. In Cursor Navigation state, the keys function according to the "key+Shift" behavior (Home; End; Page up; Page Down; left, right, up, or down arrow; Insert; and Delete.) When in Cursor Navigation state, the LED status icon above the key is ON (green).
7	**Volume keys**: Use to adjust the device's speaker volume. - use the keyboard keys **Fn**+**8** = Volume up, **Fn**+**5** = Volume down, or use the volume slider that appears on the side of the screen to adjust the Media volume when you press **Fn**+**8** or **Fn**+**5**. - To control other sounds (Call volume, Ring volume, Notifications, Alarms) tap **...** below the Volume slider to access the **Sound** settings.
8	**Print Screen** (**Fn**+**0**). Capture a screenshot of what is currently visible on the screen. Screenshots are saved to the **Files** / **Images** / **Screenshots** folder and can also be accessed under **Photos** / **Screenshots**.
9	**Modifier Keys**: **Fn**, **Shift** , **Ctrl**, and **AGr** Modifier keys are keys that modify the action taken when other keys are pressed while the modifier key is held down or are in sticky mode. Modifier keys can be used in combinations with more than one key pressed at the same time.

	To make the keyboard easier to use, the modifier keys can be configured as **sticky keys**. When sticky keys are enabled the modifier keys "stick down" when pressed so that you do not need to press-hold a modifier key while you press the other key. See See Modifier keys and Sticky keys: modes and settings, page 52 for more information. The **Search** key ( ) is used as a non-modifier key to open the Android Search function. The Search key can be made into a Sticky key using the settings; see Modifier keys and Sticky keys: modes and settings, page 52 for more information. When pressed and held, or when in Sticky mode, the Search key is a modifier key that allows access to various keyboard shortcut options. For example, press and hold the Sticky key and then press the E key to open your primary email application. To see a list of Search key modifier shortcuts, press Search + /. A list will be displayed.
10	**Fn Key** (Function Select key). Use the **Fn** key to access a key's alternate function, as printed above the key in yellow. • If sticky keys are not enabled, press-hold the **Fn** key and press the other required key. • If sticky keys are enabled you do not need to hold the **Fn** key while pressing the other key. See Modifier keys and Sticky keys: modes and settings, page 52 for m for more information.
11	**Caps Lock** = **Fn**+**Z**: locks the keyboard alphabetic keys to capital letters. The Caps LED will illuminate when Caps Lock is on.
12	**Power key**. Turn the screen on / off. Press-hold the Power key for a couple of seconds to quickly access settings to power off or restart the device, or place the device into **Shelf mode** (see Turning the device on or off, using Sleep mode or Shelf mode, page 35).
13	**Screen Lock** = **Fn**+**1**. Use to temporarily disable the touchscreen to clean the display. Press any key to unlock the touchscreen. In this mode Quick Settings are still accessible. **TIP –** You can also use the Power key to place the device in Sleep mode to clean the display; press the Power key briefly. Press the Power key again to wake up the device.
14	**Screen Display Brightness**: Adjust the display's backlight brightness: • **Fn**+**7** = brighter • **Fn**+**4** = dimmer You can also set the display brightness to adjust automatically when the ambient lighting conditions change. See Display settings: adjusting the backlight, page 47.

15	**Back Tab key**. The back tab key performs the same function as pressing the **Shift** key and the **Tab** key. For many applications this will move the focus to the previous control in the sequence, as opposed to the **Tab** key which moves the focus to the next control. For applications that use the **Tab** key for text entry, the **Back Tab key** typically performs the same as the **Tab** key.

Configuring built-in keyboard settings

You can configure some keyboard behaviors under **Settings** / **System** / **Keyboard** / **Physical keyboard** / **Built-in Keyboard**.

Use the Built-in Keyboard settings to check settings or make changes to some of the built–in keyboard behavior. Use the Android toggle to Enable/Turn On (slide to the right) or Disable/Turn Off (slide to the left). Details for each setting are covered below.

Built-in keyboard backlight

The built-in keyboard is equipped with a backlight that makes it easier to use in dimly lit areas. The backlight is activated when you press a key; it stays on for a while and then turns off to conserve power. You can manually turn off the backlight or adjust its brightness.

To edit the backlight behaviors, go to **Settings** / **System** /**Keyboard** / **Physical keyboard** / **Built-in Keyboard** / **Backlight** and configure as required:

- **Enable**. This is On by default. If you don't work in low light settings, turn Off to completely disable the backlight and save battery power.
- **Timeout** . Set the Timeout value to determine how long the backlight stays on when no keys are pressed.
- **Automatic Mode**. When set to:
  - Off, the backlight is always enabled . This is the default setting.
  - On, the device's ambient light sensor is used to keep the backlight from turning on in well lit areas.
- **Backlight brightness**. Move the slider to adjust the brightness of the backlight (right = brighter, left = dimmer). Brighter settings consume more power than dimmer settings.

Modifier keys and Sticky keys: modes and settings

Use Modifier keys to modify the action of another pressed key, while you press-hold the modifier key. Modifier keys can be used in combinations, with more than one modifier key pressed at the same time.

The modifier keys are:

- the **Fn** key
- the **Shift** ( ) key
- the **Ctrl** key
- the **AGr** key
- the **Search** ( )key

Since the device is normally hand-held, it can be difficult to press multiple keys on the built-in keyboard at the same time. To make the keyboard easier to use, you can set the modifier keys to be Sticky keys.

NOTE – You can also set the **Search** key to be a Sticky key.

When Sticky keys are enabled, the modifier keys “stick down” when pressed so that you do not need to press- hold a modifier key while you press the other key(s), allowing multiple key combinations to be pressed sequentially.

To configure Modifier / Sticky key behavior, go to **Settings** / **System** / **Keyboard** / **Physical keyboard** / **Built-in Keyboard** / **Sticky Keys**. If Sticky key behavior is off, move the **Sticky modifier keys** slider to the right to turn on Sticky key behavior.

- **On** (default) = Sticky key behavior is enabled. Modifier keys "stick down" when pressed, and they stay active until you press a non-modifier key. The associated LED will come on when the key is pressed.
- **Off** = Sticky key behavior is disabled. To access modified key functions, you must press-hold the required Modifier key and then press the other key you want. E.g. press-hold **Shift** then press an alpha key to access the capital letter.

The different Sticky key modes / settings and behavior of the modifier keys when Sticky key behavior is enabled is described below.

- **Search key**: the Search key is used as a non-modifier key to open the Android Assistant function. You can make it Sticky by turning this option On.
    - **Off (default)**: Search key is not a sticky key. Because the Search key is sometimes used in a non-modifier fashion this control allows the Search key to not be sticky while the other keys remain sticky.
    - **On**: Search key is a sticky key.
- **Lock modifier keys**: The modifier keys can be locked on (or pressed) when pressed twice in quick succession. You can set a modifier key to be locked down indefinitely by turning this setting On; when you then press a modifier key twice, it locks down until you press the key a third time.
    - **Off (default)**: Modifier keys are released when pressed twice in quick succession. Normal Sticky keys mode: Temporarily latch modifier key when pressed. Pressing and releasing a modifier key one time latches the modifier key state down until a non-modifier key is pressed at which point the modifier key is released.

    - **On**: Modifier keys are locked down when pressed twice in quick succession (press a third time to release). Pressing and releasing a modifier key one time latches the modifier key state down until another non-modifier key is pressed at which point the modifier key is released. Pressing and releasing a modifier key twice in quick succession locks the modifier key state down until it is pressed and released a third time.

- **Play sounds**. When modifier keys are pressed or released a sound will be played to make it easier to determine the locked state of the modifier keys.
    - **Off (default)**: No sound when sticky keys are pressed or released.
    - **On**: Play a sound when a modifier key is latched down, locked down, or sticky keys are pressed or released.

To assign different keys to be Modifier keys if required, go to **Settings** / **System** / **Keyboard** / **Physical keyboard** / **Modifier Keys**. Tap the Modifier key and assign the key you want to assign to the selected function then tap **Done**,

Keyboard status LEDs

There are eight LEDs on the keyboard, including five Modifier / Sticky key LEDs. The Sticky key LEDs represent the sticky state of the Modifier key it is located above.

- If the Sticky key setting is Off, then the LED will momentarily display for as long as the key is held down.
- If the Sticky key setting is On, then the LED will illuminate when the key is pressed and released and will stay on until another key is pressed.

See Modifier keys and Sticky keys: modes and settings, page 52 for more information.

The different LED states are:

	No LEDs On	None of the Modifier keys are set as "sticky".
1	**Battery Charging LED**	See Checking the battery charge levels and LED status, page 36
2	**Caps Lock LED**	ON: Caps locked. OFF (Default): Caps unlocked.
3	**Shift key LED**	ON= the Shift key is set as "sticky".
4	**Modifier keys & LEDs**	Fn, Ctrl, Search, AGr • Fn key LED ON= the Fn key is set as "sticky". • Ctrl key LED ON = the Ctrl key is set as "sticky". • Search key LED ON= the Search key is set as "sticky". • AGr key LED ON= the AGr key is set as "sticky".
5	**Cursor / Num Lock LED**	OFF = Num Lock is on (this is the default) and Cursor Navigation mode is off. The numeric keyboard performs the number functions. ON = Cursor Lock is set as "sticky"; the Cursor Navigation mode is on, and the Numeric function is off (the numeric keyboard performs the cursor navigation function). To turn off Cursor Navigation mode and turn on the Numeric function, press **Fn** + "**.**".

Using the Android operating system

This section introduces some basic information on using the Android operating system on the TSC510 controller. For additional information, go to the Android website.

Press the **Power** key to turn on the TSC510 controller . The Android operating system will guide you through the setup process. The first time you use the TSC510 controller , you are prompted to set up a Wi-Fi network and a Google Account to use with your device.

Using Accounts

You can sign up for a Google Account or use one that you already have. You already have a Google Account if you use an email address to sign in to any Google product, for example: Gmail, YouTube, Google Play, AdWords, Google Apps, or any other Google product.

When you sign in with your Google Account, you'll have access to everything associated with your Google Account, like Gmail, calendar, contacts, apps you've purchased on Google Play, and other data associated with that account. If you have multiple Google Accounts, you can add the others later.

WARNING – Make sure you remember the password you use to sign into your device or else you won't be able to access it. Even if you do a factory reset, you will be required to enter the password you used to sign into this device.

CAUTION – If you are using a company device, check with your company prior to adding personal accounts; your personal information may be accessible to others in your company if they use the same device.

Add a Google or other account

1. Open the **Settings** app.
2. Tap **Passwords & accounts**.
3. Tap **Add account**.
4. Tap the type of account you want to add.
    - To add your Google Account, tap **Google**. When you sign in with a Google Account, the email, contacts, calendar events, and other data associated with that account automatically sync with your device.
    - To add a different personal account, tap **Personal (IMAP)** or **Personal (POP3)**. You'd

generally choose these if you use an email program like Microsoft Outlook or Apple Mail.

> **TIP –** Learn how to use IMAP or POP3 with Gmail.

5. Follow the on-screen instructions.
6. If you're adding accounts, you may need to enter your device's pattern, PIN, or password for security.

You can add more accounts by repeating the steps above.

Remove a Google or other account

1. Open the **Settings** app.
2. Tap **Passwords & accounts**.
3. Tap the account you want to remove.
4. Tap **REMOVE ACCOUNT**.
5. If this is the only Google Account on the device, you'll need to enter your device's pattern, PIN, or password for security.

The Android interface

When you turn on your device, the main **Home** screen appears. The **Home** screen is the primary screen for accessing all of the TSC510 controller features on the device. You can add and customize **Home** screen(s) by adding app shortcuts and widgets (an at-a-glance view of the app's most important information) and customizing access to frequently used settings (**Quick Settings**) .The main parts of the screen are:

1	**Status bar** indicator icons are shown at the top of the display. The right side of the status bar shows the mobile signal strength, Wi-Fi signal strength, and how much battery charge is left. The left side shows the time and app notifications. To access **Notifications** and **Quick Settings** (frequently used settings): swipe down from the top of the screen. You can customize the **Quick Settings** tiles. See Customize the Quick Settings tiles, page 59 below. To quickly open all **Settings**, swipe down from the top of the screen a second time, then tap the **Settings** icon.
2	**Home** screen. To move between **Home** screens if you have more than one, swipe left or right. On the main **Home** screen, tap **Google** at the top of the screen or say OK Google (if Google Assistant voice activation is enabled) to search, send messages, ask for directions, or give other instructions. Otherwise, tap **Search**.
3	Android **Back** key. Returns to the previous screen you were working in, even if it was in a different app (not supported by all Apps). Once you back up to the **Home** screen, you can't go back any further.
4	Android **Home** key. Returns to the **Home** screen.
5	Android **Overview** key. Opens thumbnails of apps you've worked with recently. To open an app, tap it. To remove (shut down) an app, swipe it up or down.
6	**App shortcuts** to launch apps.
7	**Widgets** (e.g. the Google search bar). You can add other widgets to your Home screens as required. Touch-hold on the Home screen until a menu appears, then tap **Widgets**. Touch-hold a widget from the list to place in on your Home screen.

Android navigation keys

The TSC510 controller includes Android navigation keys (**3**, **4**, **5**) on the physical keyboard, so they do not appear on the screen.

Status bar

The Status bar (**1**) shows different status icons for various functions and apps on the device. Common icons show the battery charge status, Wi-Fi signal and connection status, mobile broadband signal and connection status, and Bluetooth connection status.

Customize the Quick Settings tiles

You can customize the **Quick Settings** tiles to suit your needs.

1. Swipe down from the top of the screen to open **Quick Settings** tiles — giving you quick access to items that you frequently use.
2. Swipe down again from the top of the screen to show all **Quick Settings** options.

   You may have **Quick Settings** tiles on more than one **Home** screen; small dots below the tiles indicate this. Swipe left/right to switch between the screens.

3. To change the order and add or remove **Quick Settings**, tap the icon.
   - To rearrange the order of any **Quick Settings** tiles that you already have showing, touch- hold then and drag and drop the required tile to where you want it.
   - To add new **Quick Settings** tiles, scroll down on the screen, then touch-hold then and drag up and drop the required tile to where you want it in your **Quick Settings**.
4. Tap the Back arrow (top left of the screen) to exit Edit mode.

Apps screen

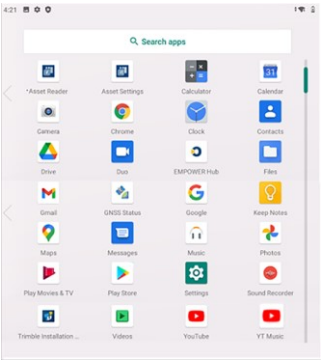

To see all apps that are pre-installed on the device and those that you downloaded from Google Play, swipe up on the **Home** screen to access the **Apps** screen:

On the **Apps** screen:

- To open an app, tap its icon.
- To search apps, enter the name of the app you are looking for in the **Search apps** bar.
- To place an app icon on a **Home** screen, see Adding apps to a Home screen, page 59.
- To get more apps, tap Play Store .
- To explore apps, swipe up and down from the **Apps** screen to view the full list of apps installed on your device.

Adding apps to a Home screen

1. From the **Home** screen (or any **Home** screen if you have more than one) open the **Apps** screen.
2. Swipe up or down to find the app you want.
3. Touch-hold the app, then slide the app icon to any **Home** screen and place it where you want it, and then lift your finger off the screen.

Removing an app, shortcut, widget or group from the Home screen

1. Touch-hold the item on the **Home** screen, and drag upwards. A menu appears.
2. Continue to hold and drag the item up to **Remove** at the top of the screen, then lift your finger off the screen.
3. The **Remove** option removes the shortcut off your **Home** screen but does not uninstall the app from the device

To move an app icon from the primary **Home** screen to another **Home** screen, touch-hold it, then slide the app icon to another **Home** screen.

Uninstalling apps

1. Touch-hold the item on the **Home** screen until a menu appears. Lift your finger off the screen.
2. Do one of the following:
   - Tap **Uninstall** to uninstall the app from the device.
   - Tap **App info**. On the App info screen, select **UNINSTALL** to uninstall the app.

Using the pre-installed Google apps and other apps

The TSC510 controller comes with a range of useful pre-installed software. The following describes some important bundled applications and summarizes what they can be used for.

Google bundled apps

	Google Play is a global online store to find, enjoy, and share your favorite apps, games, movies, music, and books on all your favorite devices.
	Google The Google app keeps you in the know about the things you care about. Find quick answers, explore your interests, and get personalized updates in your Google feed. The more you use the Google app, the better it gets.
	Google Chrome is a fast, easy to use, and secure web browser. Designed for Android, Chrome brings you personalized news articles, quick links to your favorite sites, downloads, and Google Search and Google Translate built-in. Enjoy the same Chrome web browser experience you love across all your devices.
	Gmail is an easy to use email app that saves you time and keeps your messages safe. Get your messages instantly via push notifications, read and respond online and offline, and find any message quickly.

	Google Maps allows you to navigate your world faster and easier with over 220 countries and territories mapped and hundreds of millions of businesses and places on the map. Get real-time GPS navigation, traffic, and transit info, and explore local neighborhoods by knowing where to eat, drink and go—no matter what part of the world you're in.
	YouTube is the official app for Android devices which allows you to see what the world is watching—from the hottest music videos to what's trending in gaming, entertainment, news, and more. Subscribe to channels you love, share with friends, and watch on any device.
	Google Drive is a cloud service safe place to back up and access all your files from any device. Easily invite others to view, edit, or leave comments on any of your files or folders. With Drive, you can safely store and access your files anywhere, quickly access recent and important files, search for files by name and content, share and set permissions for files and folders, view your content on the go while offline, receive notifications about important activity on your files, and use the device camera to scan paper documents.
	YT Music is a music app that allows you to easily find what you're looking for and discover new music. Get playlists and recommendations served to you based on your context, tastes, and what's trending around you.
	Google TV, previously Play Movies & TV, makes it easy to find and enjoy the entertainment you love in one place. With Google TV, you'll be able to browse movies and TV episodes across all of your streaming apps, see the latest releases, and create a watchlist shared across devices.
	Google Meet is a simple, high-quality video chat application for everyone. With its easy one-tap interface, Google Meet gives users simple, high quality video communication that just works on any device, so they never miss a moment with the people who matter most.
	Google Photos is the home for all your photos and videos, automatically organized and easy to find so you can share and save what matters.
	Calculator provides simple and advanced mathematical functions.
	Google Calendar is the official Google Calendar app to manage your schedule across multiple devices.
	Clock combines all of the functionality you need.
	Contacts is the official Google app that allows you to back up your contacts and sync them across all your devices. See each contact's email address, phone number, website, and other information at a glance.
	Google Keep Notes can be used to take notes, including text, lists, images, and audio.

	Messages is Google's official app for texting and can be used to send SMS text messages on to your contacts.
	Recorder brings the power of search to audio recording. Meetings, lectures, band practices, family memories—anything you want to save and listen to later. Recorder automatically transcribes and labels what you record so you can easily find the parts that matter to you.

Other bundled apps

	Settings. Under Settings, you will find configuration settings for Wi-Fi, Bluetooth, VPN, cellular, sounds, notifications, display, security & privacy, language& keyboard settings, passwords & accounts, etc.
	Files is a file manager that you can use to view and open recent files, including images, videos, audio and downloads stored on the device or in Google Drive.
	Camera. The Camera app lets you take regular photos or video using the rear facing camera on the device.
	Trimble Empower Hub is a utility for management of Empower modules on the Trimble Empower enabled devices.
	Trimble Installation Manager for Android enables you to easily install and update supported Trimble software to supported devices running the Android platform.
	Music is a utility for managing songs, albums, artists and playlists stored on the device.
	Videos is a utility for videos stored on the device.

Getting more apps

You can get apps, games, digital content and popular office apps such as Google Docs, Sheets, and Slides for your device using Play Store. Play Store is pre-installed on your TSC510 controller.

1. Open **Apps** and tap Play Store .
2. Use Play Store to search and browse for content to download.

For specific Trimble apps, use Trimble Installation Manager .

Using wireless networks

The TSC510 controller supports wireless connectivity; connect to wireless networks using the built-in Wi-Fi radio (also sometimes called Wireless LAN, WLAN, or 802.11), or the built-in mobile broadband data (also called Wireless WAN, WWAN, mobile data or cellular data) capability.

This section describes how to get online with the TSC510 controller using these wireless networking capabilities.

The TSC510 controller also has an NFC (Near Field Communications) antenna and module, designed for very short range radio communications with other NFC devices.

Working with Wi-Fi networks

Using Wi-Fi you can connect to a wireless network and browse the internet, download apps, send email messages, access online services, or access other computers and devices on your network.

Before you can send and receive data over Wi-Fi, you need to turn on Wi-Fi on the TSC510 controller and connect to a wireless network.

Accessing Wi-Fi settings and connecting to a network

You can access Wi-Fi settings and connect to a network from the following:

- From the **Apps** screen, open the **Settings** app. Tap **Network & internet**, then tap **Internet** to open the **Internet** settings screen.
- From **Quick Settings** on a **Home** screen. Swipe down from the top of the screen to open **Quick Settings**. If the device is connected to Wi-Fi, the **Internet** Quick Settings tile shows a Wi-Fi icon with signal strength; if not connected, a globe icon with a question mark is shown. Tap the **Internet** Quick Settings tile to open the Internet pop-up dialog.

  Tap **See All** at the bottom of the pop-up dialog to access the full list of available Wi-Fi networks.
- From **Quick Settings**, tap-hold the **Internet** Quick Settings tile to open the **Internet** setting screen. From

Quick Settings or the **Internet** settings screen:

- To turn Wi-Fi on if it is off, tap the slider to turn Wi-Fi on. A list of available networks displays.

  If the network is secured and you need a password, a padlock icon displays next to the network.
- To connect to a network when Wi-Fi is on, tap the required network to connect to it. Follow the instructions on-screen to enter the password if one is required.
- To turn Wi-Fi off if it is on, tap the slider to turn Wi-Fi off.
- If Wi-Fi is on and you are connected to a network and want to connect to a different network, tap the

network you want to connect to. Follow the instructions on-screen to enter the password if one is required.

See The Android interface, page 57 for more information on the **Apps** and **Home** screens, and **Quick Settings**.

Once you are connected:

- **Connected** shows under the network name.
- The Wi-Fi network is a **Saved network**. When in range, your device automatically connects to it.

Disconnecting from a Wi-Fi network

At the top of the **Internet** screen, tap the **On/Off** switch to turn off Wi-Fi. Or, tap the network and tap **Disconnect**.

Forgetting a Wi-Fi network

If you do not want your device to automatically connect to a saved Wi-Fi network, you can forget that network.

To forget a wireless network so it no longer appears in your list of networks:

1. From the **Apps** screen, open the **Settings** app.
2. Tap **Network & internet**.
3. Tap **Internet**.
4. At the top of the **Internet** screen, make sure the **On/Off** switch is On.
5. Tap the saved network you want to forget, then tap **Forget**.

Advanced Wi-Fi settings

To change the advanced Wi-Fi settings on your device:

1. On the **Internet** screen, scroll down past the available networks and tap **Network preferences**.
2. Tap an available setting option:
    - **Turn on Wi-Fi automatically**. Wi-Fi will turn on near high-quality saved networks, e.g. your home network.
    - **Notify for public networks**. Get a notification when your device finds a Wi-Fi network to which it can connect.
    - **Install certificates**. Digital certificates can identify your device for many purposes, including VPN or Wi-Fi network access.

- **Wi-Fi Direct**. Let your device connect with other Wi-Fi Direct-capable devices without a network.

> **NOTE –** For IMEI, IP Address, and MAC address, tap **About Device** in **Settings**.

Working with mobile broadband

The TSC510 controller has an integrated cellular modem enabling you to connect to a mobile broadband network. The TSC510 controller supports LTE (where available), and is compatible with AT&T- and Verizon-certified 4G networks, PTCRB certified carriers, and other networks that support these certifications.

Before you can send and receive data over mobile broadband, you must have a SIM card in the device (see Inserting a SIM card (optional), page 27). You must then turn on Cellular data on the TSC510 controller and configure the connection.

Using mobile data

You can adjust how your device uses mobile data by changing your cellular network settings.

Depending on your carrier and service plan, your device may connect automatically to your carrier's fastest available data network. Or you may need to choose settings and use a SIM card for a specific carrier.

To adjust cellular network settings:

1. From the **Apps** screen, open the **Settings** app.
2. Tap **Network & internet**, then tap **Mobile plan**.
3. If there is no SIM card in the device, you are prompted to insert one and restart the device.
4. Adjust the settings as required:
   - **Mobile data**. Access data using mobile network.
   - **Roaming**. Let your device transmit data over other carriers' networks when you leave an area covered by your own carrier's networks.
   - **App Data** usage.

Locating the device's IMEI number

The IMEI number is a unique 15-digit number that identifies the cellular module installed on your device. Your mobile broadband operator may need to know the IMEI number of your device to register the device with the network and activate your mobile broadband data plan.

The IMEI number is printed on the serial number label located in the removable battery / SIM card compartment on the back of the device; see Installing and removing the optional accessory battery pack, page 28 or Inserting a SIM card (optional), page 27 for instructions on removing the compartment cover.

Alternatively, to check the IMEI number in the operating system:

1. From the **Apps** screen, open the **Settings** app.
2. Tap **About device**.
3. Tap **IMEI**.

If you cannot find the IMEI number for your device, or you do not have the device with you, contact your reseller.

Using NFC (Near Field Communications)

The TSC510 controller has an NFC (Near Field Communications) antenna and module placed underneath the neck footpad on the back of the device.

The NFC antenna is meant for very short range radio communications with other NFC devices. The range is up to 4 cm (1.6 inches).

NFC in the TSC510 controller is used for automatically pairing to a Bluetooth device, accessing technical information like radio channels, and other tasks.

Trimble NFC systems do not support point of sale protocols.

To use NFC:

1. Access the section of the application software that supports NFC.
2. Align the TSC510 controller NFC antenna indicated by this icon on the neck footpad with the NFC antenna in the other device. Make sure the antennas are less than 4 cm apart and are approximately parallel to each other. If a connection does not occur, try holding the devices closer together.
3. Follow the instructions in the application software.

Trimble NFC systems conform with international standards and should work with non-Trimble devices. However, it is the application software that dictates the interactions. The application decides what to do with the transmitted data.

Airplane mode

If you are traveling on an airplane, or don't need to use wireless functions on the TSC510 controller for a while, use Airplane mode to turn on or off wireless radios with transmitting features built into the TSC510 controller, including Wi-Fi, Cellular, Bluetooth, or GNSS, as well as any wireless radios connected to the TSC510 controller such as Empower modules.

To turn Airplane mode on or off:

1. Swipe down from the top edge of the screen twice to open **Quick Settings** (see The Android interface, page 57 for more information about Quick Settings).
2. Tap the Airplane mode icon to turn it on or off.

Working with GNSS

The TSC510 controller has a built-in 4 meter accuracy GNSS (Global Navigation Satellite System) receiver module, and an integrated antenna with automatic SBAS corrections.

The TSC510 controller, via Trimble application software, supports most of the external Trimble GNSS receivers. Refer to the documentation for the Trimble receiver you want to use with the application software, and check the specifications and connection options. If you want to connect via Bluetooth make sure your receiver is capable of using current Bluetooth security; older receivers may not connect due to the security expectations of the Android operating system.

You cannot use an external antenna with the TSC510 controller's integrated GNSS receiver. For advanced GNSS setups, use a survey-grade receiver.

Using the compass

The compass can be accessed and used by any app that requests access to the compass. The compass is not designed for precise work, but can provide a general heading. Most apps allow for calibration using the method below, but not all will provide an accuracy indication like Google Maps does.

Some applications display Magnetic North and others will correct for declination to display True North. Some are automatic, some are set in settings. Depending on your location in the world, the declination can be 20° or more. Be aware of what settings your app is using to get accurate results.

Calibrating the compass

CAUTION – If an Empower module is installed or removed from the device, the compass must be re-calibrated, or you may experience poor accuracy.

A device that is exhibiting poor accuracy may have bad calibration data on the device. In most cases, this will be resolved after performing one to four calibrations (figure 8 motions) to clear out bad data and correctly calibrate the device. If the compass still appears inaccurate, more calibrations may improve this.

1. On the device, open the Google Maps app.
2. If the blue dot's beam is wide or pointing in the wrong direction, calibrate the compass.
3. Make a figure 8 until your compass is calibrated. You should only have to do this a few times. The beam should become narrow and point in the right direction.

Be aware that local conditions, the presence of power lines and other electrical sources, or the proximity of large ferrous metal objects like vehicles can affect the output of the compass.

Connecting to Bluetooth accessories

The TSC510 controller has embedded Bluetooth wireless technology—a short-range wireless communication technology that allows wireless data transfer and communication between devices over a distance of up to 100 meters (328 feet).

You can use Bluetooth wireless technology to connect the TSC510 controller to a Bluetooth headset.

Turning Bluetooth on or off

1. Swipe down from the top of the screen.
2. Tap **Bluetooth** to switch Bluetooth **On** or **Off**.

When Bluetooth is on, the Bluetooth button at the top of the screen is illuminated.

TIP – To save battery, turn off Bluetooth when you are not using it.

Pairing and connecting a Bluetooth device with the TSC510 controller

Before you can transfer data or communicate between your TSC510 controller and another Bluetooth enabled device, you must pair the TSC510 controller and the device.

Step 1: Pair a Bluetooth accessory

1. Swipe down from the top of the screen and tap-hold **Bluetooth**, or go to **Settings**/ **Connected devices**..
2. Tap **+ Pair new device**. A list of available Bluetooth devices that are within range is displayed.
3. Tap the name of the Bluetooth device you want to pair with your device.

4. Follow any on-screen instructions. If the pairing is successful, the TSC510 controller connects to the device.

> **TIP –** If you are asked to enter a passcode or Bluetooth PIN, try entering 0000 or 1234 (the most common passcodes), or see the documentation that came with your Bluetooth device. Some old Bluetooth devices do not require a PIN.

> **NOTE –** To connect to a Bluetooth-enabled receiver with a PIN, if for any reason you cannot connect via Bluetooth, connect over Wi-Fi to configure the receiver. The IP address is in most cases 192.168.142.1. Refer to the documentation for the receiver for details and receiver specific settings.

Step 2: Connect to a Bluetooth device

After pairing with a Bluetooth device, you can connect to it manually— for example, to switch devices or to reconnect after a device comes back in range.

1. Swipe down from the top of the screen.
2. If Bluetooth is turned off, tap **Bluetooth** to turn it on.
3. Tap-hold **Bluetooth**.
4. In the list of paired devices, tap a paired but unconnected device.

When your phone and the Bluetooth device are connected, the device shows as **Connected**.

Transferring files via Bluetooth

1. On the PC, click the Bluetooth icon in the tool tray and select **Receive a File**.
2. On the TSC510 controller, open the **Files** app, select the file you want to transfer, and tap , which gives options for sharing. Tap **Bluetooth**.
3. Select your PC in the list of Bluetooth devices, and the file will start to transfer.
4. On the PC, once file transfer has finished, navigate to a location where you want the file saved.

Connecting to RS-232 peripherals

If you require an RS-232 port, you can connect a 3rd party USB-C to RS-232 adapter.

To connect an RS-232 device, plug the device cable into the RS-232 adapter port and plug the USB-C plug on the adapter into the USB-C port on the TSC510 controller .

The adapter may require drivers or software to be installed on the TSC510 controller.

Refer to the documentation for the RS-232 device for instructions on setting up and using the device.

Transferring data between your TSC510 controller and another computer

You can transfer data or files between your TSC510 controller and another device. There are a number of ways you can do this, including:

- using a USB (type C) data transfer cable. See Transferring data using a USB-C cable, page 74.
- using a USB (type C) memory stick; see Connecting to USB accessories, page 70.
- via Wireless LAN; see Working with Wi-Fi networks, page 63.
- via Bluetooth; see Connecting to Bluetooth accessories, page 72.
- using cloud-based file sync services, such as Dropbox, Microsoft OneDrive, Google Drive over Wi-Fi or WWAN.

Transferring data using a USB-C cable

You can transfer data to a device powered by a Windows® operating system or to a MacOS device using a USB (type C) data cable.

Transfer with the Windows operating system

This method doesn't require any drivers or anything else to be installed on the Windows 10 / Windows 11 device.

1. Unlock the screen on the TSC510 controller .
2. Use a USB type C data transfer cable to connect the TSC510 controller to the Windows device.
3. On the TSC510 controller, the **USB Preferences** screen opens.
4. Under **Use USB for**, tap **File Transfer**.
5. On the Windows device, open **File Explorer**. Under **This PC**, you should see **TSC510**; click to expand it to view the folders on the TSC510 controller.
6. You can now view and transfer the files on the TSC510 controller from the Windows file browser. Use it to drag and drop files, just like other external storage devices.
7. When you are done, eject the TSC510 controller from the Windows device and unplug the USB cable.

Transfer with a MacOS device

To transfer files, you must use third party software designed for the purpose. There are applications for both the device and for the MacOS device. The best method of transfer to a Mac is to use a cloud service or a USB memory stick.

Using Trimble Empower modules

The TSC510 controller has two Trimble Empower bays. Empower bays can be used to extend or expand the basic capabilities of your device. Empower modules can be installed, removed, or moved from one Empower- enabled device to another. The Empower modules make it easy for you to manage a fleet of devices across multiple users, field roles, and job requirements.

The functionality of Empower modules is unlocked through applications and utilities developed specifically for each module. For more information about using Trimble Empower modules, refer to the module documentation.

Module functionality can also be directly integrated into field software by developers. The

TSC510 controller allows two Empower modules to be installed at a time.

Attaching and removing Empower modules

To attach a module, see Attaching an Empower module (optional), page 33.

When you attach a module, make sure that the Empower Hub and other supporting software is updated. See Installing Empower module drivers and software apps, page 75.

You do not need to remove a module from the device unless you need to swap it between devices, or for troubleshooting purposes (e.g., if the device does not recognize the module is attached).

To remove the module:

1. Make sure the device is turned off.
2. Using a Phillips #1 screwdriver or the screwdriver incorporated in the stylus, loosen the 2 captive screws at the bottom of the Empower module. Slide the module up and off. Store the module in a safe, dry location to prevent damage to the module interface pogo-pins.

Installing Empower module drivers and software apps

The Empower software and drivers come installed in the operating system. However, before using an Empower module for the first time, you may need to check for updated drivers and software apps on the TSC510controller for the device to recognize and operate the module.

- Go to the TSC510 controller Help on https:/help.fieldsystems.trimble.com/portal/home.htm, or directly to https://mcs.trimble.com/ and check for any updates that may be needed.
- Check the Trimble Installation Manager software, which is installed on the TSC510 controller, for any Trimble application software updates.
- Refer to the documentation supplied with your module for instructions on which components to update and how to use the module and software utilities.

Configuring and controlling a module with the Trimble Empower Hub application

The Empower Hub is a centralized location to control and manage Trimble Empower modules from one convenient, easy-to-use application. The Empower Hub comes installed on the TSC510controller and can be used to monitor module status and manage modules attached to your device, including:

- View module status information
- Enable and Disable connected modules
- Launch utilities to configure your module(s)
- Configure and launch applications associated with your modules
- Check for and install module firmware updates

Turn on the device and from the **Home** screen, swipe up to open the **Apps** screen. Tap on the Empower Hub icon to start the Empower Hub app.

For more information, refer to the module documentation.

> **TIP –** To save battery power, turn off the Empower module if you will not be using it for a prolonged period.

Powering modules in the Empower Hub

Most Empower modules can be powered off. This can be useful if you are still using the device, but are not using the Empower module. All Empower modules draw some power, even when they are not being used. Power off the Empower module to help maximize battery life.

Application software can also power modules on and off. They will often power off a module if you stop using it in the current software configuration.

To power off the module in Empower Hub, tap the toggle switch at the top of the information screen.

Using the camera

The TSC510 controller is fitted with one rear facing 13MP autofocus camera with LED flash. The camera is accessible from the Camera app.

> **NOTE –** The device may be shipped with a protective film covering the camera and flash windows. Remove the film with a fingernail or the plastic stylus tip before first use to ensure proper focus and exposure of your photos and videos.

By default, the built-in Camera app is ready to take photos, but you can switch easily between photo and video mode.

Before you use the camera, make sure you have removed the protective film on the camera and flash window.

To take a photo or record a video:

1. Swipe up on the **Home** screen to access the Apps screen.
2. Tap the **Camera** app to start the camera.
    - By default, the app opens in Camera mode. Tap the Camera icon to take a photo.
    - To switch to Video mode, tap **Video**. Recording starts immediately.
        - Tap the Pause icon to pause / restart the video.
        - Tap the microphone icon on the left side of the screen to turn sound on or off.
        - Tap the Camera icon while in Video mode to take a photo.
        - Tap the Stop icon to end the recording and return to Camera mode.

To zoom in, move your thumb and forefinger apart on your screen. To zoom out, pinch your thumb and forefinger on your screen. You can also use the on-screen slider to zoom in / out.

To focus on and expose the subject of the photo, tap it on your screen.

To see the photos you've saved, tap the thumbnail image in the corner of the screen.

By default, your photos and videos are saved to the Photos app on the TSC510 controller ; open this app from the Apps screen.

You can also look through your photos and videos from:

- the **Camera app**: tap an image thumbnail to open the photo. Swipe right or left to scroll through other photos / videos in your collection.
- the **Files app**: Images captured with the Camera app are automatically accessible in the Files app. Open the Files app from the Apps screen.

Enable the Camera app to access your location to geo-tag photos

1. In the Camera app, tap ⚙.

   NOTE – if you have a Filter selected (see above) this menu is disabled.

2. In the **Settings** list, tap **GPS location** to toggle on/off as required.
3. To close the **Settings** screen and return to the Camera app, tap the back arrow (top left of the screen).

Changing camera settings

- Tap the camera **Flash** icon to toggle through Flash On, Flash Off, or Flash Auto.
- Tap the **Filter** icon on the left of the screen to select a filter for your photo.
- If no Filter is selected, tap the tap the **...** menu to access settings for:
  - Automatic
  - HDR
  - Pro Mode. Pro Mode can be selected to provide more control over picture parameters such as f-stop, ISO, and White Balance directly from screen sliders.
  - More setting options — tap ⚙. From here you can set picture size, picture quality / resolution, storage location, a countdown timer, face detection, exposure, white balance, shutter sound, along with Video camera settings.

Troubleshooting

This section contains answers to some common troubleshooting questions. If you encounter problems when using the TSC510 controller, try the following troubleshooting tips to detect and solve the problem. If problems persist, contact your local distributor for support.

Further assistance and support with the Android operating system

For comprehensive online support, how-to guides, troubleshooting articles and related downloads for the Android operating system, go to the online Android support pages.

- Performance issues, page 79
- Empower module issues, page 81
- Wireless connectivity issues, page 82
- Compass accuracy issues, page 82
- Power and battery issues, page 82
- Restarting or resetting the operating system, page 84
- Operating system and software updates, page 85
- Repairing your device, page 85

Performance issues

Device is running slowly, restarts or crashes frequently

If your device is running slowly, keeps rebooting itself, or crashing without restarting, one of the steps below may fix the issue. After following the steps for each recommended solution, check whether it fixed your issue.

Check for Android updates

System updates can bring improvements that may fix your issue. To check for and install system updates:

1. Tap to open the **Settings** app.
2. Scroll to the bottom and tap **System update**. The update status displays.
3. Follow any on-screen instructions.

Check storage and free up space

You may experience issues if the device's internal storage is full or almost full. The device can start having issues when less than 10% of storage is free.

To check how much storage the device has:

1. Tap to open the **Settings** app.
2. Tap **Storage** to see how much storage is available.

To free up space that the device needs to work properly, remove unnecessary files and clear cached data.

Check for app updates

App updates can bring improvements that may fix your issue.

To get updates for your Trimble apps through **Trimble Installation Manager**, tap . Refer to the Trimble Installation Manager help at https://help.fieldsystems.trimble.com/installation-manager-android/home.htm for more information.

To see and get updates for your apps on Google Play Store:

1. Open **Play Store**.
2. If you are not logged in to your Google account, you must log in.
3. At the top left, tap .
4. Tap **Updates**.
5. Apps with available updates are labeled **Update**. If an update is available, tap the app **Update**. If multiple updates are available, tap **Update all**.

Close apps that you are not using

Normally, you don't need to close apps; Android automatically manages the memory that apps use. But to completely shut down an app, including any background services that it may be using:

1. Tap to open the **Settings** app.
2. Tap **Apps** then if required tap to expand the list of **All apps**.
3. Tap the app that you want to close.
4. Tap **Force stop**, then tap **OK**.

TIP – To help identify apps that cause problems, make a list of which apps you have manually force- stopped.

Check if an app is causing the issue

The issue may be caused by an app that you downloaded. To see whether a downloaded app is causing the issue, you can reboot your device in safe mode. Safe mode temporarily disables all downloaded apps.

1. To reboot the device in safe mode and temporarily disable all downloaded apps:
   a. Press the **Power** key on the keyboard until the **Power** menu appears, or swipe down from the top of the screen to open **Quick Settings** then tap the **Power** icon (bottom right of the screen).
   b. On the **Power** menu, tap-hold **Power Off**.
   c. You will be prompted to Reboot to safe mode. Tap **OK**.
2. Once in safe mode, wait to see if the problem goes away.
   - **If the issue isn't resolved in safe mode**, a downloaded app is most likely not causing the issue. Restart the device and try other troubleshooting solutions.
   - **If the issue is resolved in safe mode**, a downloaded app is most likely causing the issue. To find out which app it is:
     a. Restart the device to exit safe mode.
     b. One by one, uninstall recently downloaded apps. After each removal, restart the device and check if the issue is resolved.
     c. When you have identified and removed the app that was causing the problem, you can reinstall the other apps that you removed.

Empower module issues

My field software doesn’t recognize my Empower module

- Check module contacts and attachment

  It is possible the contacts between the module and the device are dirty, or that the module is not attached correctly. Ensure that the module contacts are clean and that the screws are tightened correctly.
- Your field software is not configured to communicate with the Empower module

  Run the Empower Hub app and check if it "sees" the module. If it does not, make sure the module is powered on using the toggle switch in Empower Hub and/or check the mounting and contacts again.

  Try rebooting the device and check in the Empower Hub app again.

The Empower Hub doesn’t show my module

- Check module contacts and attachment.

  It is possible the contacts between the module and the device are dirty, or that the module is not attached correctly. Ensure that the module contacts are clean and that the screws are tightened correctly.
- Make sure the module is powered on using the toggle switch in the Empower Hub app.

Refer to the Trimble Empower modules documentation for more information.

Wireless connectivity issues

Wi-Fi speed is slow

- Your network is running slow for all devices.

  You should first check to see whether your network is slow on another device. Can you connect to your wireless network and browse the web at normal speeds from another device? Try running a Network Speed Test to ensure your internet connection is functioning normally.

- Your Wi-Fi signal is weak.

  Look at the Wireless network icon in the taskbar.

  This icon shows your current signal strength. If the icon is partially dimmed, move your device closer to your wireless router to see if the signal improves. If your router is broadcasting on both a 2.4 GHz and 5 GHz frequency, try connecting to a different frequency. In general, a network operating on the 5 GHz frequency will be faster and less susceptible to interference, but will have a shorter range than a 2.4 GHz network.

Compass accuracy issues

You may need to re-calibrate the compass, especially if you have removed or installed an Empower module or optional accessory battery pack.

See Using the compass, page 69 for more information.

Power and battery issues

Battery (internal or user-replaceable) will not charge

- The battery is overheated, or too cold.

  The battery will charge between 0 °C and +40 °C (+32 °F and +104 °F). If you have been using or storing the battery and/or device in a particularly hot or cold environment, the battery may be outside the safe charging temperature range. Sensors in the battery will prevent the battery from charging until its temperature returns to a normal level.

- The optional user-replaceable battery is not installed correctly.

  If the optional user-replaceable battery is not installed correctly in the device or the battery charger, it may not have a proper connection and will not charge.

- The optional user-replaceable battery terminals are dirty or corroded.

  If the terminals of the battery are dirty or corroded, it may not have a proper connection and will not charge.

Device will not start up

- The batteries do not have enough charge to power the device.

  The internal batteries must be partially charged to boot the device, and the device must be between –20 °C and +60 °C (–4 °F and +140 °F) to boot up. Plug the charger into the device and leave on charge for 30 minutes then try to boot the device. If after you press the Power button you see a battery indicator on the screen with a red charge level and charger icon, the battery needs to continue charging before the device can turn on.

- Check the optional user-removable battery charge level.

  If the device will not power on with the internal batteries, check the optional user-removable battery charge level, if available. Remove from the device, and press-hold the charge indicator button on the battery. At least one charge LED must be lit up to indicate that a battery has enough power for the device to start on battery power. If no LEDs light up on a battery, swap the battery for a charged battery, or charge the battery using the battery charger accessory before reinserting it.

- The optional user-replaceable battery is not installed correctly.

  The device may not be receiving power from the battery if it is not installed properly. Remove the battery, then replace it correctly. Replace the battery bay door and tighten the 4 screws.

Device suddenly turns off during use

- Make sure you are not accidentally pressing the Power key.

  The Power key is located on the left side of the keyboard. Make sure that while gripping the device you are not accidentally pressing the Power key, which places the device into suspend mode.

- The device may have run out of power.

  If your device's battery charge level gets too low, the device will automatically power down. You must charge the internal batteries before it will turn on, or insert an optional user-removable battery. See Checking the battery charge levels and LED status, page 36 for more information on batteries.

  If you regularly run out of battery power while in the field, consider carrying a spare accessory battery pack with you.

  If you already have a user-replaceable battery installed in the device, shut down the device then remove the battery from the device, and check the battery level by pressing-holding the battery level button on the battery. If the battery charge is too low, reinsert the battery into the device and attach the device to an external power source, swap the battery for a charged battery, or charge the battery using other means if available, before reinserting it.

Restarting or resetting the operating system

If your device becomes unresponsive, and the troubleshooting guide does not resolve the problem, you need to restart or reset your device.

Restarting your (unresponsive) device

If your device is no longer responding to touchscreen or keypad input, you may need to force it to restart by removing power from the system.

> **CAUTION –** Restarting the system by holding down the Power key removes power to the CPU. Any unsaved files and settings will be lost.

To force your device to restart:

1. Press-hold the Power key until the **Power Off** and **Restart** options appear on the screen.
2. Tap **Restart** to restart the device.

Resetting your device to factory default settings

If restarting your device does not resolve the issue that you are seeing, resetting it might help. You can remove all data from your device by resetting it to factory settings.

> **WARNING – A factory reset wipes all data from the device**. While any data stored in your Google Account in the cloud will be restored, all apps and their associated data will be uninstalled.

> **WARNING –** Your device is protected to prevent other people from using it if it's been reset to factory settings. After a factory reset, you'll need to enter your Google username and password associated with the device . If you don't have this information, you won't be able to finish the setup process and use the device at all after the factory reset.

Erasing your data may take some time, so make sure that you plug your device into a power source before you start.

1. Tap to open the **Settings** app.
2. Tap **System**.
3. Tap **Reset options**, and then tap the reset option you want to use:
   - **Reset Wi-Fi, Mobile & Bluetooth**
   - **Reset app preferences**

- **Erase all data (factory reset)**. Select this option to factory reset the device to the original state it was shipped in.

4. Follow the on-screen instructions for the option you selected. You may need to enter your unlock pattern, PIN, or password.
5. When the device has finished erasing, you'll be prompted to go through the new device setup.

Operating system and software updates

Periodically, operating system and software application updates will be available for your device.

Software downloads and updates

The latest versions of software including drivers, firmware updates, and software utilities, are available at https://mcs.trimble.com/ or through the Trimble Installation Manager app that is installed on your device. Additional material and information can be found at https:/help.fieldsystems.trimble.com/portal/home.htm.

Repairing your device

Before you send your TSC510 controller for repair, check the troubleshooting guide in this document. If you can't solve the problem with troubleshooting, contact your local Trimble dealer for further support.

Repair of this product should only be performed by an authorized service provider. Any attempt to disassemble this product by a non-authorized service provider will void the warranty.

For more information, contact your local Trimble dealer.