Lyra 24P

Regulatory Information *v2.0*

1 Current Regulatory Certifications

The Lyra 24P holds current certifications in the following countries:

Country/Region	Regulatory ID
USA (FCC)	S9E-LYRA24P
Canada (ISED)	5817A-LYRA24P

2 Certified Antennas

The antennas listed below were tested for use with the Lyra 24P. The OEM can choose a different manufacturer's antenna but must make sure it is of same type and that the gain is less than or equal to the antenna that is approved for use.*

Model	Manufacturer	Type	Connector	Peak Gain (2400 – 2500 MHz)
Integrated Antenna	Ezurio	Chip	NA	1.82 dBi
NanoBlue - EBL2400A1-10MH4L	Ezurio	PCB Antenna	IPEX MHF4	2 dBi
FlexPIFA – 001-0022	Ezurio	Planar Inverted-F Type	IPEX MHF4	2 dBi
mFlexPIFA – EFA2400A3S-10MH4L	Ezurio	Planar Inverted-F Type	IPEX MHF4	2 dBi
EDA-8709-2G4C1-B27-CY	Mag Layers	Dipole	IPEX MHF4	2.32 dBi
53007045	Trimble	Sleeve Dipole	RP-TNC Male	2 dBi
132074 (L000625-01)	Trimble	Sleeve Dipole	RP-SMA Male	2.7 dBi

3 Documentation Requirements

To ensure regulatory compliance, when integrating the Lyra 24P into a host device, it is necessary to meet the documentation requirements set forth by the applicable regulatory agencies. The following sections outline the information that may be included in the user's guide and external labels for the host devices into which the Lyra 24P is integrated.

4 FCC REGULATORY

Model	US/FCC
Lyra 24P	S9E-LYRA24P

4.1 Antenna Information

The Lyra 24P family has been designed to operate with the antennas listed below.

Model	Manufacturer	Type	Connector	Peak Gain (2400 – 2500 MHz)
Integrated Antenna	Ezurio	Chip	NA	1.82 dBi
NanoBlue - EBL2400A1-10MH4L	Ezurio	PCB Antenna	IPEX MHF4	2 dBi
FlexPIFA – 001-0022	Ezurio	Planar Inverted-F Type	IPEX MHF4	2 dBi
mFlexPIFA – EFA2400A3S-10MH4L	Ezurio	Planar Inverted-F Type	IPEX MHF4	2 dBi
EDA-8709-2G4C1-B27-CY	Mag Layers	Dipole	IPEX MHF4	2.32 dBi
53007045	Trimble	Sleeve Dipole	RP-TNC Male	2 dBi
132074 (L000625-01)	Trimble	Sleeve Dipole	RP-SMA Male	2.7 dBi

Note: The OEM is free to choose another vendor's antenna of like type and equal or lesser gain as an antenna appearing in the table and still maintain compliance. Reference FCC Part 15.204(c)(4) for further information on this topic.

Trace Antenna

The following is the RF layout option 1 (applicable for Trimble antenna 53007045).

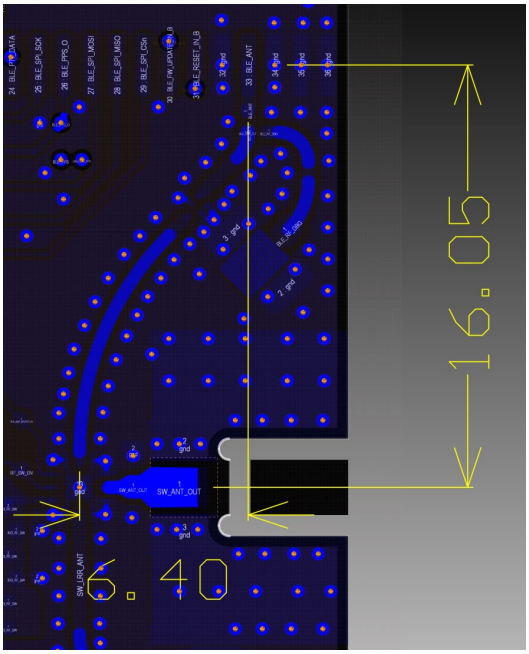

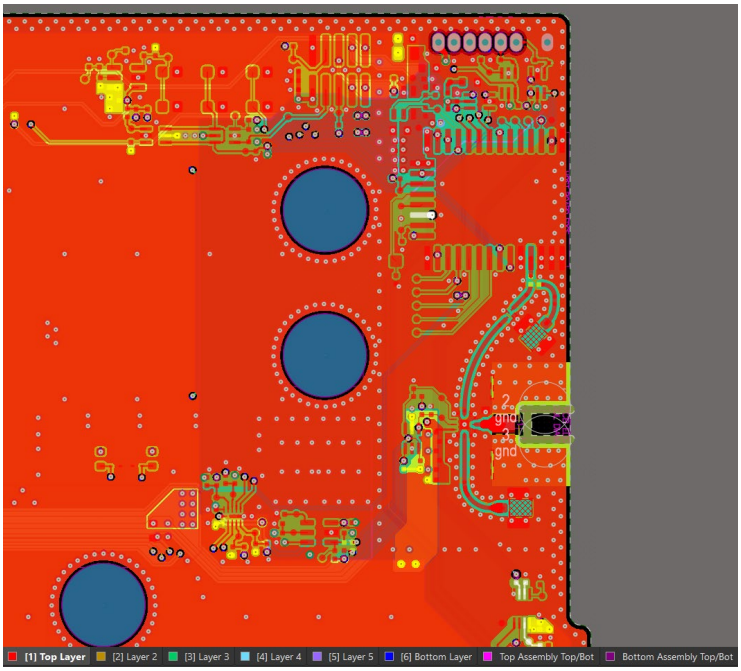

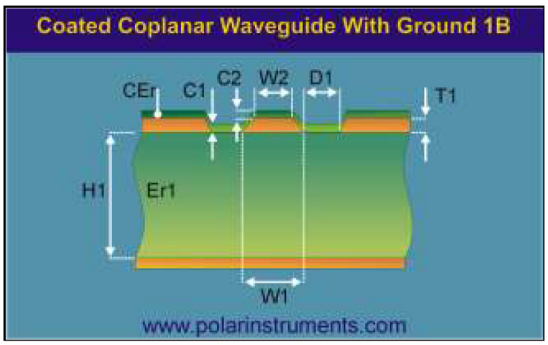

				Tolerance	Minimum	Maximum
Substrate 1 Height	H1	335,0000	+/-	0,0000	335,0000	335,0000
Substrate 1 Dielectric	Er1	4,0000	+/-	0,0000	4,0000	4,0000
Lower Trace Width	W1	500,0000	+/-	0,0000	500,0000	500,0000
Upper Trace Width	W2	500,0000	+/-	0,0000	500,0000	500,0000
Ground Strip Separation	D1	250,0000	+/-	0,0000	250,0000	250,0000
Trace Thickness	T1	35,0000	+/-	0,0000	35,0000	35,0000
Coating Above Substrate	C1	30,0000	+/-	0,0000	30,0000	30,0000
Coating Above Trace	C2	15,0000	+/-	0,0000	15,0000	15,0000
Coating Dielectric	CEr	4,0000	+/-	0,0000	4,0000	4,0000

Impedance	Zo	50,065	--------	50,065	50,065
Delay (ps/m)	D	5710,462	--------	5710,462	5710,462
Inductance (nH/m)	L	285,895	--------	285,895	285,895
Capacitance (pF/m)	C	114,061	--------	114,061	114,061
Effective Dielectric Constant	EEr	2,931	--------	2,931	2,931
Velocity of Propagation (CITS)	Vp	0,584	--------	0,584	0,584

RF Layout in micrometers including dielectric constant

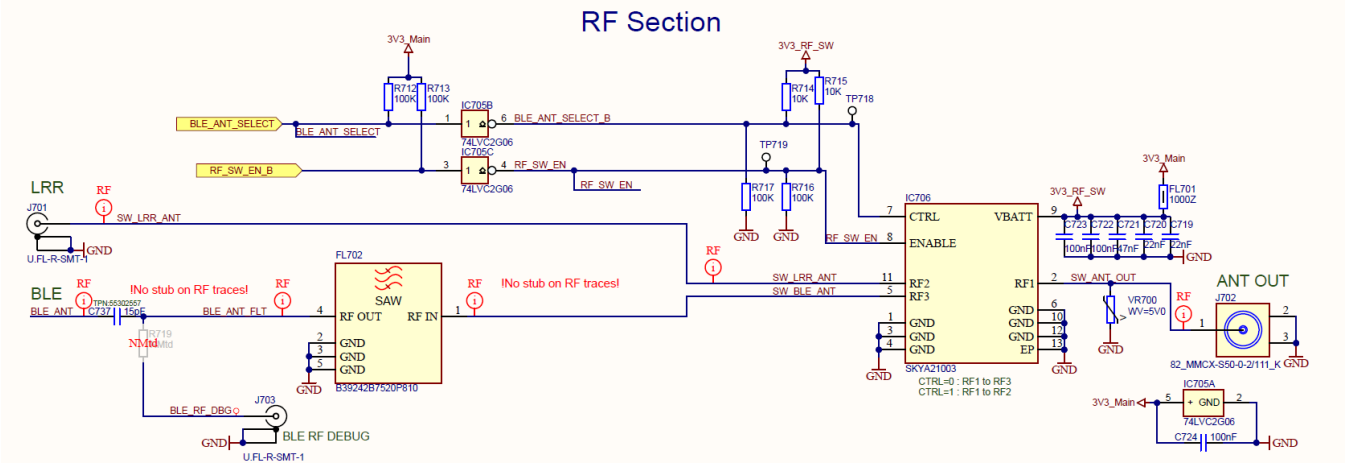

Schematic, RF path

SAW Filter FL702: Qualcom B39242B7520P810
RF Switch IC706: Skyworks SKYA21003
ESD protection VR700: Bourns CG0603MLU-05E

The following is the RF layout option 2 (applicable for Trimble antenna 132074).

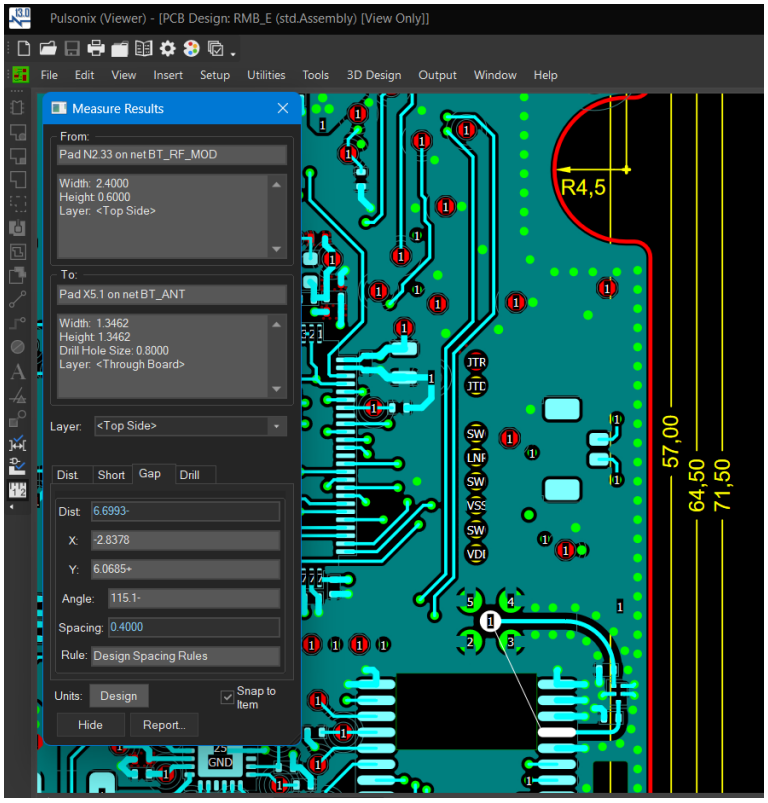

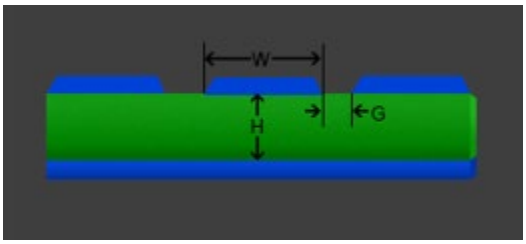

Conductor width (W)	0.27 mm
Conductor height (H)	0.12 mm
Conductor gap (G)	0.4 mm
Dielectric constant, Er	3.9
Impedance, Z0	49.8772 Ohm

RF layout stackup including dielectric constant

Impedance Table			Single ended		Differential		
Layer	Upper Ref	Lower Ref	Trace width (µm)	Impedance (Ohm)	Trace width (µm)	Trace spacing 'Airgap' (µm)	Impedance (Ohm)
L1 (Top)	---	L2 (In2)	270	50	150	200	90
L6 (Bot)	L5 (In5)	---	---	---	150	200	90

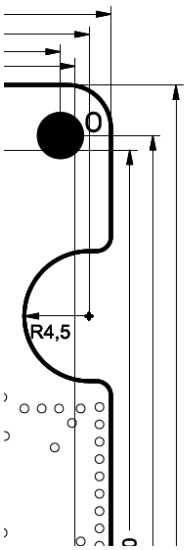

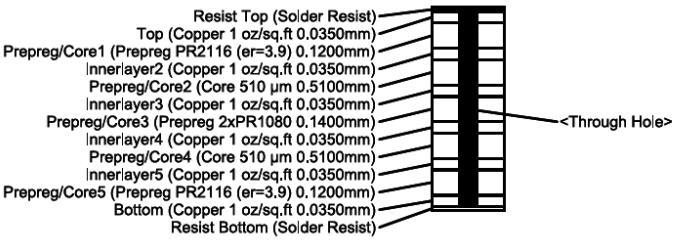

PCB-Thickness: 1.6mm ±10%

PCB ML6 Rigid 53.0 x 71.5mm x 1.6mm)
Surface: Lac., chem. Ni/Au, Pb-free, UL

DRILL TABLE		Units: mm		
Final Diam.	Plated	Count	ID	Symbol
0.200	Y	542		○
0.700	Y	13		△
0.800	Y	5		✳
1.500	N	2		◇
3.100	Y	4	o	●
Drill count plated:		564		
Drill count unplated:		2		
TOTAL DRILL COUNT:		566		

Bohrungen im Endzustand: (Drills in final state:)

Metallisiert (plated drills) $\varnothing^{+0,1}_{-0,05}$

Nicht metallisiert (none plated drills) $\varnothing^{+0,1}_{0}$

Tolerances: ISO 2768-mH, Size ISO 14405 Ⓔ

RF layout stackup

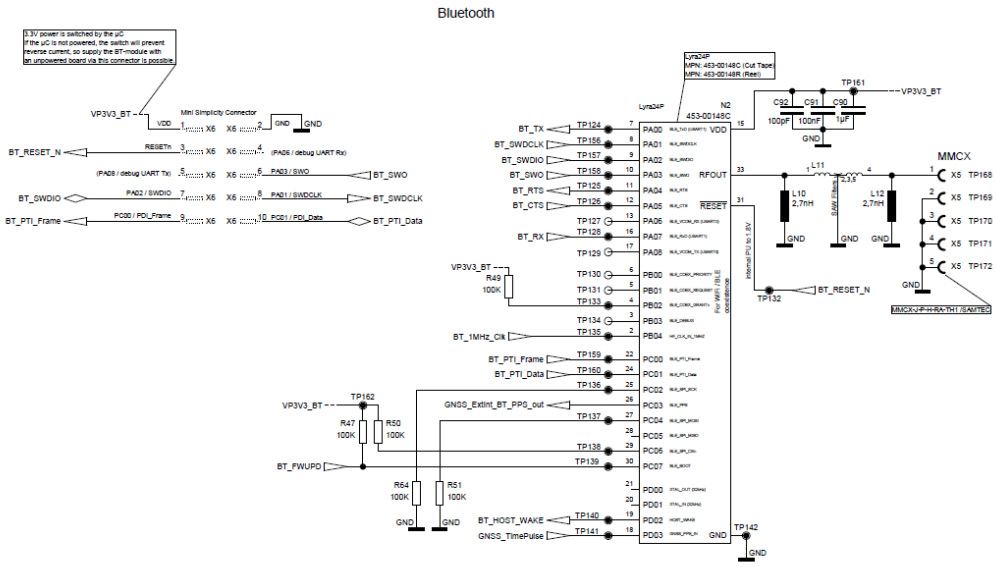

RF Schematic

SAW filter L11: Kyocera SF14-2446M5UUP3
Inductors L11 & L12: Coilcraft 0402HP-2N7XGRW

4.2 FCC Documentation Requirements

Applicable FCC rules to module: FCC Part 15.247

Federal Communication Commission Interference Statement

This equipment has been tested and found to comply with the limits for a Class B digital device, pursuant to Part 15 of the FCC Rules. These limits are designed to provide reasonable protection against harmful interference in a residential installation. This equipment generates, uses, and can radiate radio frequency energy and, if not installed and used in accordance with the instructions, may cause harmful interference to radio communications.

However, there is no guarantee that interference will not occur in an installation. If this equipment does cause harmful interference to radio or television reception, which can be determined by turning the equipment off and on, the user is encouraged to try to correct the interference by one of the following measures:

- Reorient or relocate the receiving antenna.
- Increase the separation between the equipment and receiver.
- Connect the equipment into an outlet on a circuit different from that to which the receiver is connected.
- Consult the dealer or an experienced radio/TV technician for help.

FCC Caution: Any changes or modifications not expressly approved by the party responsible for compliance could void the user's authority to operate this equipment.

This device complies with Part 15 of the FCC Rules. Operation is subject to the following two conditions:

1. This device may not cause harmful interference; and
2. This device must accept any interference received, including interference that may cause undesired operation.

FCC Radiation Exposure Statement

This equipment complies with FCC radiation exposure limits set forth for an uncontrolled environment. This equipment can be installed and operated at a distance of 4 cm between the radiator and your body.

Co-location of this module with other transmitters that operate simultaneously are required to be evaluated using the FCC multi-transmitter procedures.

This device is intended only for OEM integrators under the following condition:

1. The antenna(s) used for this transmitter must not transmit simultaneously with any other co-located antenna or transmitter, except in accordance with FCC multi- transmitter product procedures.

If the condition above is met, further transmitter testing is not required. However, the OEM integrator is still responsible for testing their end-product for any additional compliance requirements required with this installed module.

IMPORTANT NOTE:
In the event that these conditions cannot be met (for example certain laptop configurations), then the FCC authorization is no longer considered valid, and the FCC ID cannot be used on the final product. In these circumstances, the OEM integrator will be responsible for re-evaluating the end-product (including the transmitter) and obtaining a separate FCC authorization. The OEM integrator must be aware not to provide information to the end user regarding how to install or remove this RF module in the user's manual of the end-product which integrates this module.

Information on Test Modes and Additional Testing Requirements

Test tool: The Texas Instruments Calibrator Tool shall be used to set the module to transmit continuously

Additional Testing, Part 15 Subpart B Disclaimer

The module is only FCC authorized for the specific rule parts listed on the grant, and that the host product manufacturer is responsible for compliance to any other FCC rules that apply to the host not covered by the modular transmitter grant of certification. The final host product still requires Part 15 SubpartB compliance testing with the modular transmitter installed

End-Product Labeling

The end product must be labeled in a visible area with the following: ***Contains FCC ID: S9E-LYRA24P***

Manual Information to the End User

The OEM integrator must be aware not to provide information to the end user regarding how to install or remove this RF module in the user's manual of the end product which integrates this module.

The end user manual shall include all required regulatory information/warning as show in this manual.

5 Innovation Science and Economic Development Canada Statement

Applicable ISED rules to module: RSS-247

Model	Canada/IC
Lyra 24P	5817A-LYRA24P

5.1 Antenna Information

This radio transmitter (IC: 5817A-LYRA24P) *was approved by* Innovation, Science and Economic Development (ISED) Canada to operate with the antenna types listed below, with the maximum permissible gain indicated. Antenna types not included in this list that have a gain greater than the maximum gain indicated for any type listed are strictly prohibited for use with this device.

Le présent émetteur radio (IC: 5817A-LYRA24P) *a été approuvé par Innovation, Sciences et Développement économique Canada pour fonctionner avec les types d'antenne énumérés ci-dessous et ayant un gain admissible maximal. Les types d'antenne non inclus dans cette liste, et dont le gain est supérieur au gain maximal indiqué pour tout type figurant sur la liste, sont strictement interdits pour l'exploitation de l'émetteur.*

Model	Manufacturer	Type	Connector	Peak Gain (2400 – 2500 MHz)
Integrated Antenna	Ezurio	Chip	NA	1.48 dBi
NanoBlue - EBL2400A1-10MH4L	Ezurio	PCB Antenna	IPEX MHF4	2 dBi
FlexPIFA – 001-0022	Ezurio	Planar Inverted-F Type	IPEX MHF4	2 dBi
mFlexPIFA – EFA2400A3S-10MH4L	Ezurio	Planar Inverted-F Type	IPEX MHF4	2 dBi
EDA-8709-2G4C1-B27-CY	Mag Layers	Dipole	IPEX MHF4	2.32 dBi
53007045	Trimble	Sleeve Dipole	RP-TNC Male	2 dBi
132074 (L000625-01)	Trimble	Sleeve Dipole	RP-SMA Male	2.7 dBi

5.2 ISED Canada Statement

The end user manual shall include all required regulatory information/warning as shown in this manual.

This device complies with Innovation Science and Economic Development Canada's license-exempt RSSs. Operation is subject to the following two conditions:

1. This device may not cause interference; and
2. This device must accept any interference, including interference that may cause undesired operation of the device.

Le présent appareil est conforme aux CNR d'Industrie Canada applicables aux appareils radio exempts de licence. L'exploitation est autorisée aux deux conditions suivantes:

1. *l'appareil ne doit pas produire de brouillage;*
2. *l'utilisateur de l'appareil doit accepter tout brouillage radioélectrique subi, même si le brouillage est susceptible d'en compromettre le fonctionnement.*

Radiation Exposure Statement

The product complies with the Canada portable RF exposure limit set forth for an uncontrolled environment and are safe for intended operation as described in this manual. The minimum separation distance for portable use is limited to 4cm. The further RF exposure reduction can be achieved if the product can be kept as far as possible from the user body or set the device to lower output power if such function is available.

Déclaration d'exposition aux radiations:

Le produit est conforme aux limites d'exposition pour les appareils portables RF pour les Etats-Unis et le Canada établies pour un environnement non contrôlé. La distance de séparation minimale pour l'utilisation portative est limitée à 4cm. Le produit est

sûr pour un fonctionnement tel que décrit dans ce manuel. La réduction aux expositions RF peut être augmentée si l'appareil peut être conservé aussi loin que possible du corps de l'utilisateur ou que le dispositif est réglé sur la puissance de sortie la plus faible si une telle fonction est disponible.

This device is intended only for OEM integrators under the following conditions:

1. The antenna(s) used for this transmitter must not transmit simultaneously with any other co-located antenna or transmitter, except in accordance with multi- transmitter product procedures.

If the condition above is met, further transmitter testing is not required. However, the OEM integrator is still responsible for testing their end-product for any additional compliance requirements required with this module installed.

Cet appareil est conçu uniquement pour les intégrateurs OEM dans les conditions suivantes:

1. *L'antenne ou les antennes utilisées pour cet émetteur ne doivent pas émettre simultanément avec une autre antenne ou un autre émetteur colocalisé, sauf conformément aux procédures relatives aux produits multi-émetteurs.*

Tant que les 1 condition ci-dessus sont remplies, des essais supplémentaires sur l'émetteur ne seront pas nécessaires. Toutefois, l'intégrateur OEM est toujours responsable des essais sur son produit final pour toutes exigences de conformité supplémentaires requis pour ce module installé.

IMPORTANT NOTE:

If this condition cannot be met (for example, certain laptop configurations), then the Canada authorization is no longer considered valid and the IC ID **cannot** be used on the final product. In these circumstances, the OEM integrator is responsible for re-evaluating the end product (including the transmitter) and obtaining a separate Canada authorization.

NOTE IMPORTANTE:

Dans le cas où ces conditions ne peuvent être satisfaites (par exemple pour certaines configurations d'ordinateur portable ou de), l'autorisation du Canada n'est plus considéré comme valide et l'ID IC ne peut pas être utilisé sur le produit final. Dans ces circonstances, l'intégrateur OEM sera chargé de réévaluer le produit final (y compris l'émetteur) et l'obtention d'une autorisation distincte au Canada.

End-Product Labeling

The final end product must be labeled in a visible area with the following: ***Contains IC: 5817A-LYRA24P***

Plaque signalétique du produit final

Le produit final doit être étiqueté dans un endroit visible avec l'inscription suivante: ***Contient des IC: 5817A-LYRA24P***

Manual Information to the End User

The OEM integrator has to be aware not to provide information to the end user regarding how to install or remove this RF module in the user's manual of the end product which integrates this module.

The end user manual shall include all required regulatory information/warning as show in this manual.

Manuel d'information à l'utilisateur final

L'intégrateur OEM doit être conscient de ne pas fournir des informations à l'utilisateur final quant à la façon d'installer ou de supprimer ce module RF dans le manuel de l'utilisateur du produit final qui intègre ce module.
Le manuel de l'utilisateur final doit inclure toutes les informations réglementaires requises et avertissements comme indiqué dans ce manuel.

5.3 ICES-003 Issue 7 Compliance Statement

This device was originally tested to the requirements of ICES-003 Issue 6, Information Technology Equipment (Including Digital Apparatus) — Limits and Methods of Measurement; and evaluated to the updates published in ICES-003, Issue 7, Information Technology Equipment (Including Digital Apparatus). Based on this evaluation, this product continues to observe

compliance to the requirements set forth by The Innovation, Science and Economic Development Canada (ISED), and complies with the updates published in ICES-003, Issue 7, Information Technology Equipment (Including Digital Apparatus).