T310d Access Point
Quick Setup Guide

CAUTION! The minimum software revision for the T310d is ZoneDirector (ZD) 10.1 or later, or SmartZone (SZ) 3.6 or later, or standalone AP firmware 108.0 or later.

This *Quick Setup Guide* provides step-by-step instructions on how to field-install the Ruckus Wireless T310d access point (AP).

For detailed information on planning the installation, performing a site survey, and operating the T310d, refer to the *Outdoor Access Point User Guide*, available at https://support.ruckuswireless.com.

WARNING: *Only trained and qualified personnel should be allowed to install, replace, or service this equipment.*

WARNING: *Installation of this equipment must comply with local and national electrical codes.*

CAUTION: *Make sure that you form a 80mm - 130mm (3”-5”) drip loop in any cable that is attached to the AP or the building. This will prevent water from running along the cable and entering the AP or the building where the cable terminates.*

CAUTION: *Be sure that grounding is available and that it meets local and national electrical codes. For additional lightning protection, use lightning rods and lightning arrestors.*

CAUTION: *Make sure that proper lightning surge protection precautions are taken according to local electrical code.*

WARNING: *Ruckus Wireless strongly recommends that you wear eye protection before mounting the T310d.*

This Guide in Other Languages

请从以下网站获得该指南的简体中文版
https://support.ruckuswireless.com.

Vous trouverez la version française de ce guide à l'adresse suivante
https://support.ruckuswireless.com.

このガイドの日本語版は https://support.ruckuswireless.com
でご覧ください。

이 가이드의 한국어 버전은 웹 사이트
(https://support.ruckuswireless.com) 에서 확인하시기 바랍니다 .

Veja a versão em português (Brasil) deste guia em
https://support.ruckuswireless.com.

Puede ver la versión en español (América Latina) de esta guía en
https://support.ruckuswireless.com.

Before You Begin

Before deploying your Ruckus Wireless T310d, verify that all items listed in Package Contents are included in the package. If any item is damaged or missing, notify your authorized Ruckus Wireless sales representative. Also, make sure that you have the required hardware and tools.

Required Hardware and Tools

- No. 2 Phillips screwdriver
- Small flat-blade screwdriver
- Torque wrench or torque screwdriver with sockets
- Long-nose pliers
- Electrical wire stripping and terminal crimping pliers
- Pipe or pole --OR-- a sturdy flat surface
- Electric drill with drill bits and customer-supplied wall anchors, flat washers, and hex nuts for flat-surface mount

Package Contents

A complete T310d field installation package includes all of the items listed below (see Figure 1for illustrations):

- T310d Access Point (A)
- Two M25 data cable glands (B)
- Ground wire with lug (C)
- Pole/Wall Mount Bracket Kit (D)
- Two steel pipe clamps
- Service Level Agreement/Limited Warranty Statement
- Declaration of Conformity
- Regulatory Statement
- Ruckus Wireless AP Getting Started Guide
- This Quick Setup Guide

Figure 1: Package Contents

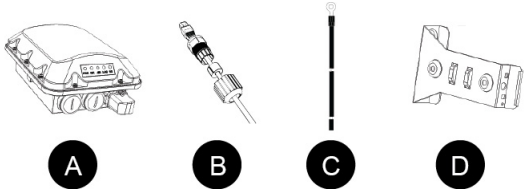

Mounting Instructions

Step 1: Connecting and Sealing the RJ-45 Cables

Connect and seal the RJ-45 cable(s) using the M25 data cable gland as shown in Figure 3.

WARNING: *Do not use any PoE injector not tested and approved by Ruckus Wireless to power the T310d Access Point.*

Figure 2: T310d LEDs and Ports

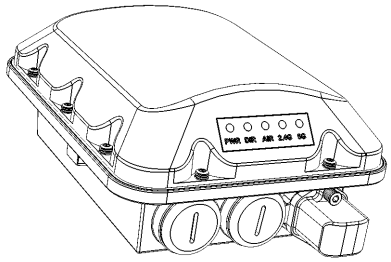

Copyright © 2017 Ruckus Wireless, Inc.
Published July 2017, Part Number 800-71482-001 Rev A

1 Feed the end of the cable through the sealing nut, rubber O-ring, clamping ring assembly and cable gland base as shown in Figure 3.

WARNING: *Do not seat the clamping ring and rubber O-ring into the gland body until the gland body has been torqued to spec.*

Figure 3: RJ-45 cable and cable gland assembly

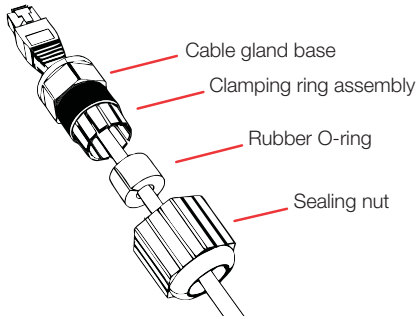

2 Use a wide flat-blade screwdriver to remove the required (PoE IN) blanking cap from the AP.
3 Connect the cable to the Ethernet port on the AP.
4 Tighten the cable gland base into the AP chassis to 7 N.m or 62 in-lbs.
5 Wrap the clamping ring assembly around the rubber O-ring. Make sure that the clamping ring assembly fully encloses the rubber O-ring.
6 Seat the clamping ring assembly and rubber O-ring in the cable gland base.
7 Hand-tighten the sealing nut.

Step 2a: Attaching the Mounting Bracket to a Flat Surface

1 The AP mounting bracket attaches to the AP using a captive screw. Use a medium flat-blade or No. 2 Phillips screwdriver to loosen the captive screw (A in Figure 4) and pull up on the end of the bracket to remove the bracket from the AP (B in Figure 4).

Figure 4: Removing the mounting bracket

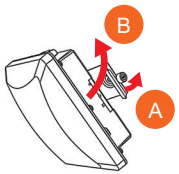

2 Using either of the two options shown in Figure 5, hold the mounting bracket at the location on the mounting surface where you want to mount the AP. Use the holes on the mounting bracket as a template to mark the locations of the mounting holes.

NOTE: *The mounting bracket can be mounted to a vertical or horizontal surface to support the AP in the required orientation.*

Figure 5: Mounting bracket on a flat surface

3 Remove the mounting bracket from the mounting surface.
4 Drill holes required for the customer-supplied mounting hardware.
5 Attach the mounting bracket to the flat surface using the mounting hardware.
6 Using the mounting hardware instructions, tighten the hardware to secure the mounting bracket.
7 Continue with Step 3: Mounting the AP.

Step 2b: Attaching the Mounting Bracket to a Pole

1 The AP mounting bracket attaches to the AP using a captive screw. Loosen the screw (A in Figure 4) and pull up on the end of the bracket to remove the bracket from the AP (B in Figure 4).

2 Insert the open end of one steel clamp (D in Figure 1) into two of the slots on the mounting bracket.

NOTE: *The mounting bracket can be mounted to a vertical or horizontal pole to support the AP in the required orientation.*

3 Using either of the two options shown in Figure 6, use the clamp(s) to attach the mounting bracket to the pole. Tighten the clamps to 3 N.m or 27 in-lbs, or per manufacturer's specifications if the factory-supplied clamps are not used.
4 If necessary, daisy-chain the other steel clamps to accommodate larger poles.

Figure 6: Mounting bracket on a pole

5 Continue with Step 3: Mounting the AP.

Step 3: Mounting the AP

1 Snap the AP back onto the mounting bracket (A in Figure 7), and use a medium flat-blade or No. 2 Phillips screwdriver to tighten the captive screw to 1.1 N.m or 10 in-lbs to secure the bracket to the AP (B in Figure 7).

Figure 7: Attaching the mounting bracket to the AP

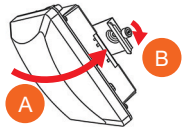

2 Optional Step: If you also need to lock the mounting bracket to the AP, then use a matching security screwdriver to screw the customer-supplied locking stainless steel 6mm M3 panhead security screw through the mounting bracket and into the AP chassis.

CAUTION: *Make sure that the customer-supplied locking stainless steel M3 panhead security screw is no longer than 6mm. If the security screw is longer than 6mm, it can damage the AP chassis.*

Figure 8: Locking the mounting bracket to the AP

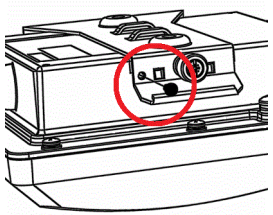

3 Continue with Step 4: Powering the AP with DC.

Step 4: Powering the AP with DC

1 Install the DC power supply as described in the DC power supply accessory installation guide.
2 Connect the DC cord to a DC power source.

Step 5: Earth Grounding the AP

CAUTION: *Make sure that earth grounding is available and that it meets local and national electrical codes. For additional lightning protection, use lightning rods and lightning arrestors.*

NOTE: *The color coding of ground wires varies by region. Before completing this step, check your local wiring standards for guidance.*

- Using the factory-supplied ground wire and ground screw/washer set, connect a good earth ground to the AP chassis ground point (Figure 9).

Copyright © 2017 Ruckus Wireless, Inc.
Published July 2017, Part Number 800-71482-001 Rev A

CAUTION: *The T310d AP includes one 9mm stainless steel M6x1 earth ground screw with split lock and flat washers. Make sure that any replacement screw is no longer than 9mm. If a screw is longer than 9mm, it can damage the AP chassis.*

Figure 9: Connect good earth ground to AP here

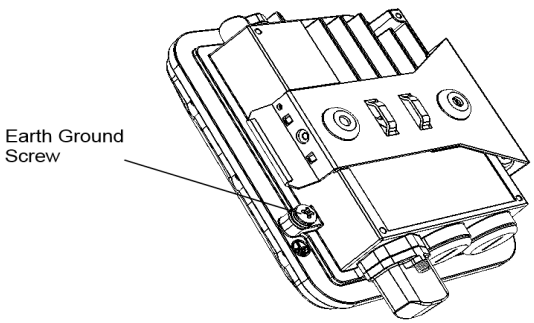

Congratulations! You have mounted your T310d access point.

Installing a USB Dongle

To install a USB dongle, which could be an IoT radio like BLE, 802.15.4, Z-wave or the like, remove the two 3mm hex screws, remove the cap, and insert the dongle into the USB port. Once installed, replace the cap and the hex screws, and torque the screws to 7 in-lbs.

NOTE: *The maximum dimensions of the USB dongle that can be inserted are xxx. If you need to install a larger USB device, you can purchase a separate USB cover, part number xxx.*

Figure 10: Installing a USB dongle

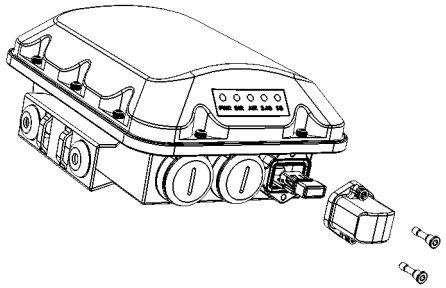

Troubleshooting

CAUTION: *If required, you can reset the AP to its factory default settings by pressing the reset button located inside the PoE IN port. DO NOT DO THIS UNLESS SO INSTRUCTED. (Doing this resets the AP IP address to 192.168.0.1.)*

NOTE: *After a reset, you can access the internal AP web interface using* **`https://192.168.0.1`**. *Your device must use any other address from 192.168.0.2 through 192.168.0.254, with subnet mask 255.255.255.0. The username is* `super`, *and the password is* `sp-admin`. *Refer to the Outdoor Access Point User Guide for information on configuring and operating the AP. This document is available at* https://support.ruckuswireless.com.

NOTE: *After an AP is removed from its mounting, it may drip some water from the channel surrounding the radome. As long as the AP has been operating normally, this incidental water collection and dripping is normal, and is not service-affecting.*

Copyright © 2017 Ruckus Wireless, Inc.
Published July 2017, Part Number 800-71482-001 Rev A