T670 Omni Access Point Quick Setup Guide

This Quick Setup Guide provides step-by-step instructions on how to field-install the RUCKUS T670 Omni access point (AP). For detailed information on planning the installation, performing a site survey, and operating the T670 Omni, refer to the *RUCKUS Outdoor Access Point User Guide*, available at https://support.ruckuswireless.com.

NOTE: The minimum software version for the T670 Omni AP is SmartZone (SZ) 7.0 or later, Unleashed (UN) 200.17 or later, and RUCKUS One (R1).

DANGER: *Installation of this equipment must comply with local and national electrical codes.*

WARNING! Only trained and qualified personnel should install, replace, or service this equipment. This equipment should be installed in restrcted-access areas only.

WARNING! RUCKUS strongly recommends that you wear eye protection before mounting the T670 Omni.

CAUTION! Make sure that you form a 80mm - 130mm (3-in.-5-in.) drip loop in any cable that is attached to the AP or the building. This will prevent water from running along the cable and entering the AP or the building where the cable terminates.

CAUTION! Be sure that grounding is available and that it meets local and national electrical codes. For additional lightning protection, use lightning rods and lightning arrestors.

CAUTION! Make sure that proper lightning surge protection precautions are taken according to local electrical code.

This Guide in Other Languages

- 请从以下网站获得该指南的简体中文版 http://docs.commscope.com/?docs-box.
- Vous trouverez la version française de ce guide à l'adresse suivante http://docs.commscope.com/?docs-box.
- このガイドの日本語版は http://docs.commscope.com/?docs-box でご覧ください。
- 이 가이드의 한국어 버전은 웹 사이트 (http://docs.commscope.com/?docs-box) 에서 확인하시기 바랍니다.
- Veja a versão em português (Brasil) deste guia em http://docs.commscope.com/?docs-box
- Puede ver la versión en español (América Latina) de esta guía en http://docs.commscope.com/?docs-box

Before You Begin

Before deploying RUCKUS products, please check for the latest software and the release documentation.

- Release Notes and other user documentation are available at http://support.ruckuswireless.com/documents.
- Software upgrades are available at http://support.ruckuswireless.com/software.
- Software license and limited warranty information are available at http://support.ruckuswireless.com/warranty.

  Before deploying your RUCKUS Access Point, verify that all items listed in **Package Contents** are included in the package. If any item is damaged or missing, notify your authorized RUCKUS sales representative. Also, make sure that you have the required hardware and tools.

Required Hardware and Tools

- ½-in. (13-mm) flat-blade screwdriver or equivalent
- No. 2 Phillips screwdriver
- Small flat-blade screwdriver
- Torque wrench or torque screwdriver with sockets
- Long-nose pliers
- Electrical wire stripping and terminal crimping pliers
- Pipe, pole or a sturdy flat surface
- Electric drill with drill bits and customer-supplied wall anchors, flat washers, and hex nuts for flat-surface mount

Package Contents

A complete T670 field installation package includes all of the items listed below:

- T670 Access Point
- M25 data cable glands
- Outdoor AP Mounting Bracket kit
- One ground wire with lug
- Cloud Management Statement
- Four ½-in. (12.7-mm) wide adjustable clamps, 2.5-in. (63.5-mm) diameter, for main mounting bracket on smaller poles
- Safety cable kit
- Declaration of Conformity

Mounting Instructions

Connecting and Sealing the RJ-45 Cables

The T670 may use zero, or one or two RJ-45 cables: one for Ethernet when configured as a Root AP (RAP), and another when the T670 is connecting to a peripheral device, such as a small cell or micro cell radio. When the T670 uses RJ-45 cables, connect and seal the cables using the M25 data cable glands as shown in Figure 4.

FIGURE 1 T670 AP Port-side View

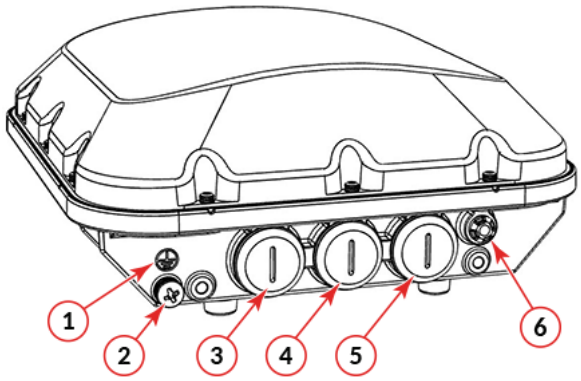

1. Ground symbol
2. Ground screw
3. PoE IN
4. Ethernet
5. DC
6. LED indicators

WARNING! Do not use any PoE injector not tested and approved by RUCKUS to power the T670 Access Point.

FIGURE 2 T670 AP Back View

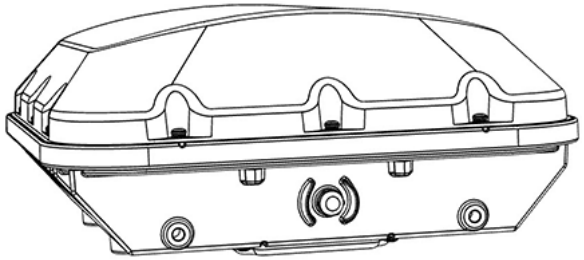

Copyright © 2024 CommScope, Inc. All rights reserved.
Published September 2024, Part Number 800-73566-001 Rev A

FIGURE 3 T670 AP Bottom View

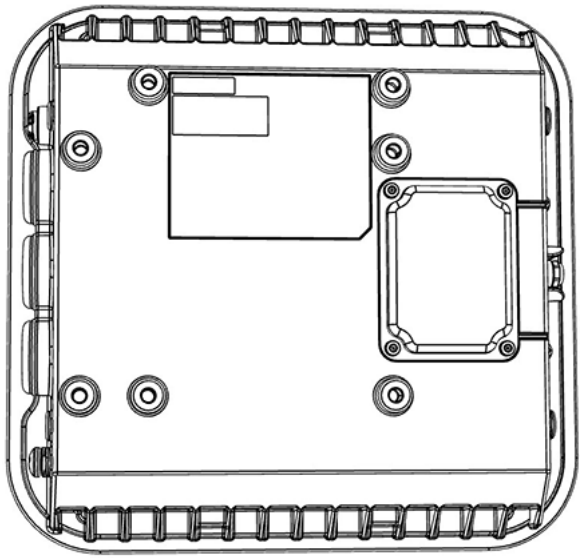

1. Feed the end of the cable through the gland dome, rubber grommet, clamping ring assembly and cable gland base, as shown in Figure 4.

> **NOTE:** Do not seat the clamping ring and rubber grommet into the cable gland base until the cable gland base has been torqued to specifications.

FIGURE 4 RJ-45 Cable and Cable Gland Assembly

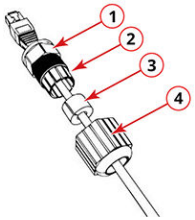

1. Cable gland base
2. Clamping ring
3. Rubber grommet
4. Gland dome

2. Use a wide flat-blade screwdriver to remove the PoE IN or second ethernet blanking cap from the T670 as shown in Figure 1.
3. Connect the cable to the Ethernet port in the AP.
4. Tighten the cable gland base to 7 N.m (62 in-lbs).
5. Wrap the clamping ring assembly around the rubber grommet. Make sure that the clamping ring assembly fully encloses the rubber grommet.
6. Seat the clamping ring assembly and rubber grommet in the cable gland base.
7. Hand-tighten the gland dome.

Attaching the U-Joint Bracket to the Mounting Bracket

1. Position the U-joint bracket on the mounting bracket.

> **NOTE:** Mount the U-joint bracket in any direction on the mounting bracket, preferably to allow AP azimuth adjustments. Then the AP bracket allows AP elevation adjustments.

FIGURE 5 U-joint bracket attached horizontally to the mounting bracket

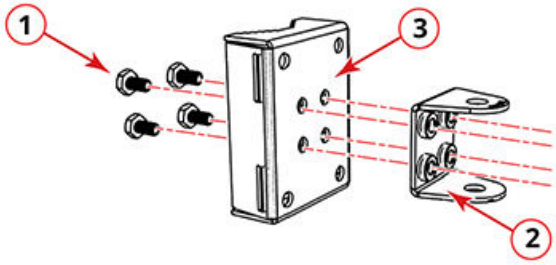

1. Bolts
2. U-joint bracket
3. Mounting bracket

2. Use four 1/4 - 28 bolt and washer sets (1) to mount the U-joint bracket (2) to the mounting bracket (3). Tighten the bolts to 9.5 N.m (84 in-lbs).
3. Continue with Attaching the Mounting Bracket to a Flat Surface.

Attaching the Mounting Bracket to a Flat Surface

1. Place the mounting bracket at the location on the flat surface where you want to mount the AP. Use the surface holes (1 in Figure 6) on the mounting bracket as a template to mark the locations of the mounting holes.

FIGURE 6 Mounting bracket flat surface holes

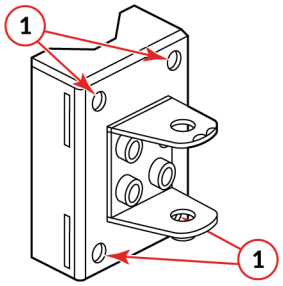

1. Surface holes

2. Remove the mounting bracket from the flat surface.
3. Drill holes required for the mounting hardware.

> **NOTE:** The hardware required for mounting to a wall are not included in the mounting kit.

4. Attach the mounting bracket to the flat surface using the customer-supplied wall anchors, flat washers, and hex nuts.
5. Using the mounting hardware instructions, tighten the hardware to secure the mounting bracket.
6. Continue with Figure 8 *on page 3*.

Attaching the Mounting Bracket to a Pole

1. Insert the open end of one steel clamp through the upper two slots on the mounting bracket.
2. Take the other steel clamp and insert it through the lower two slots on the mounting bracket.

> **NOTE:** Multiple clamps can be daisy-chained together to accommodate larger poles.

3. Use the clamps to attach the mounting bracket to the pole. Tighten the clamps to 3 N.m (27 in-lbs) or per manufacturer's specifications.

FIGURE 7 Attaching the mounting bracket to a vertical pole

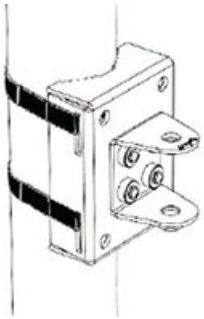

4. Continue with Mounting the Linkage Bracket to the U-Joint Bracket.

Mounting the Linkage Bracket to the U-Joint Bracket

1. The linkage bracket attaches to the U-joint bracket using an M8 bolt, washer, and nut set. The linkage bracket is symmetrical, and either end can be attached to the U-joint bracket.

> **NOTE:** Make sure that linkage bracket is installed with its serrated external-tooth lock washer on the inside of the U-joint bracket flanges. This ensures that the azimuth adjustment does not change.

2. Loosely assemble the linkage bracket (1), the U-joint bracket (3), one serrated external-tooth lock washer (2), and one M8 bolt and washer set (4) as shown in Figure 8.

Copyright © 2024 CommScope, Inc. All rights reserved.
Published September 2024, Part Number 800-73566-001 Rev A

FIGURE 8 Attaching the linkage bracket to the U-joint bracket

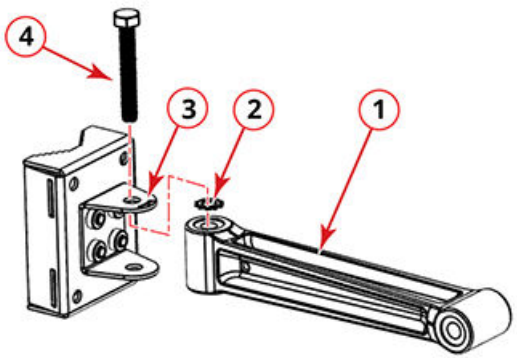

1. Linkage bracket
2. U-joint braket
3. External-tooth lock washer
4. M8 bolt

3. Set the azimuth required by the AP.
4. Tighten the M8 bolt to 13.6 N.m (120 in-lbs).
5. Continue with Attaching the AP Bracket to the Linkage Bracket.

Attaching the AP Bracket to the Linkage Bracket

1. Attach the AP bracket to the linkage bracket using the included bolt, lock washer, flat washer, serrated external-tooth washer and nut shown in Figure 9.

   The linkage bracket is symmetrical, and either end can be attached to the AP bracket.
2. Loosely assemble the AP bracket to the linkage bracket using the M8 bolt, washer and nut set.

FIGURE 9 Attach the linkage bracket to the AP bracket

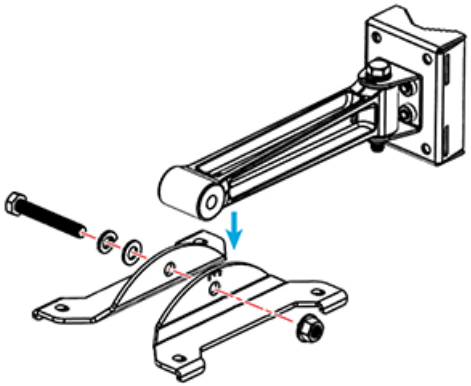

NOTE: Make sure that the linkage bracket is installed with its serrated external-tooth lock washer on the *inside* of the AP bracket flanges. This ensures that the elevation adjustment does not change.

3. Continue with Figure 10 on page 3.

Attaching the AP Bracket to the Access Point

1. Place the AP bracket onto the back side of the AP so that the four larger screw holes on the bracket align with the four screw holes on the AP.

FIGURE 10 Attaching the AP bracket to the AP

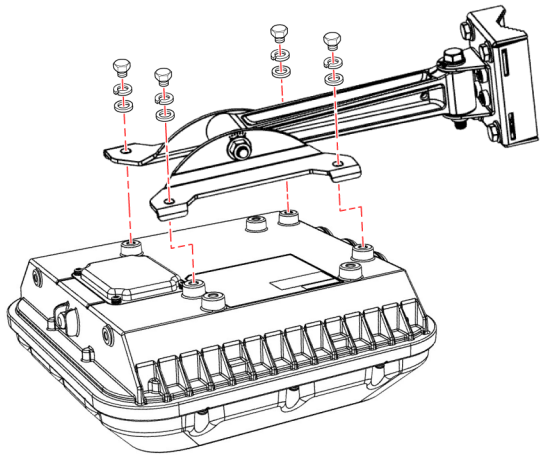

2. Use four 0.5-inch x 0.250-28 hex bolts with split lock and flat washer sets to mount the AP bracket to the AP. Tighten the bolts to 2.5-3.0 N.m (22-27 in-lbs).

CAUTION! Make sure that the screws are no longer than 0.5 inch. If a screw is longer than 0.5 inch, it can damage the AP chassis.

NOTE: This kit may include extra screws, nuts and washers. You may use the extras where required.

3. Continue with Set the Elevation and Tighten Elevation Bolt.

Set the Elevation and Tighten the Elevation Bolt

1. Set the elevation required by the AP.
2. Tighten the M8 bolt to 13.6 N.m (120 in-lbs).
3. Continue with Powering the AP with DC Power *on page 3.*

Earth Grounding the AP

CAUTION! Make sure that earth grounding is available and that it meets local and national electrical codes. For additional lightning protection, use lightning rods and lightning arrestors.

NOTE: The color coding of ground wires varies by region. Before completing this step, check your local wiring standards for guidance.

Using the factory-supplied ground wire and ground screw/washer set, connect a good earth ground to the AP chassis ground point.

CAUTION! The T670 AP includes one 9 mm stainless steel M6 x1 earth ground screw with split lock and flat washers. Make sure that any replacement screw is no longer than 9 mm. If a screw is longer than 9 mm, it can damage the AP chassis.

FIGURE 11 Connect good earth ground to AP

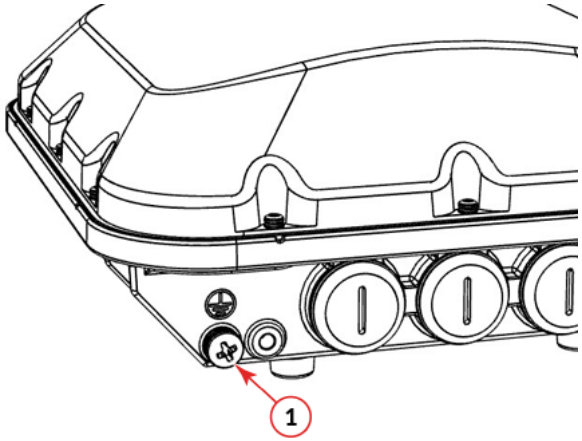

1. Earth ground screw

Powering the AP with DC Power

The AP can accommodate two sources of power: PoE (48V) power and 48VDC.

The AP can draw power from the Ethernet input as a Class 5 device, providing a maximum of 30 W to the system. Alternately, power can be supplied through a customer-provided 48V DC power supply that will connect to a two-pin terminal block. The terminal block is accessible through a water-tight gland on one end of the unit. The terminal block connection has surge and polarity protection to protect against inserting the wrong polarity leads into the terminal block.

NOTE: If both the PoE and DC ports are used, separate cable glands must be used for each port. An additional cable gland (Part Number: 902-0183-0000) can be be purchased.

NOTE: When both the 48V DC and the 48V PoE power are active, the AP will prioritize the 48V DC power.

CAUTION! Ensure that the DC power source does not exceed 48V DC.

1. Install the DC power supply as described in the DC power supply accessory installation guide.
2. Connect the power cord to a DC power source.
3. Verify that the LED on the AP is blinking amber (may also be in a green state if a WLAN has been configured).

Copyright © 2024 CommScope, Inc. All rights reserved.
Published September 2024, Part Number 800-73566-001 Rev A

Installing the Security Cable

1. Thread the security cable through the mounting bracket (1 in Figure 12) and through the eye on the cable itself (2 in Figure 12).
2. Attach the safety cable to the AP by inserting the eyelet end of the safety cable between the AP bracket and the mounting hardware (flat washer, split washer and 0.5-inch x 0.250-28 hex bolt). Refer (3 in Figure 12).
3. Tighten the bolts to 2.5-3.0 N.m (22-27 in-lbs).

FIGURE 12 Attaching the security cable

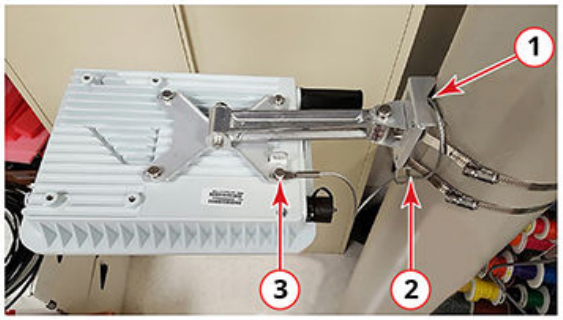

Troubleshooting

CAUTION! If required, you can reset the AP to its factory default settings by pressing the reset button located inside the PoE IN port. Use the tip of a pen or a 3-mm flat-blade screwdriver to press the reset button.

- Soft reset: Press less than 4 seconds.
- Factory reset: Press more than 5 seconds and less than 15 seconds. The LED will alternate red and green.
- Recovery mode with factory defaults: Press more than 15 seconds. The LED will alternate between red and amber once before the AP reboots.

DO NOT RESET THE AP TO FACTORY DEFAULT SETTINGS UNLESS SO INSTRUCTED. (Doing this resets the AP IP address to 192.168.0.1.)

NOTE: After a reset, you can access the internal AP web interface using https://192.168.0.1. Your device must use any other address from 192.168.0.2 through 192.168.0.254, with subnet mask 255.255.255.0. The username is **super**, and the password is **sp-admin**.

NOTE: The 6GHz radio option is not allowed for use in China.

For More Information

For information on how to configure and manage the AP, refer to the *RUCKUS Access Point User Guide*, available from https://support.ruckuswireless.com.

RUCKUS, Inc. is a wholly owned subsidiary of CommScope, Inc.

© 2024 CommScope, Inc. All rights reserved.

CommScope and the CommScope logo are registered trademarks of CommScope and/or its affiliates in the U.S. and other countries. For additional trademark information see https://www.commscope.com/trademarks. All product names, trademarks, and registered trademarks are the property of their respective owners.