SCHEMATIC

HAND HELD TRANSCEIVER SR-9E2

WESTINGHOUSE LIGHT MANAGEMENT SYSTEMS

Westinghouse

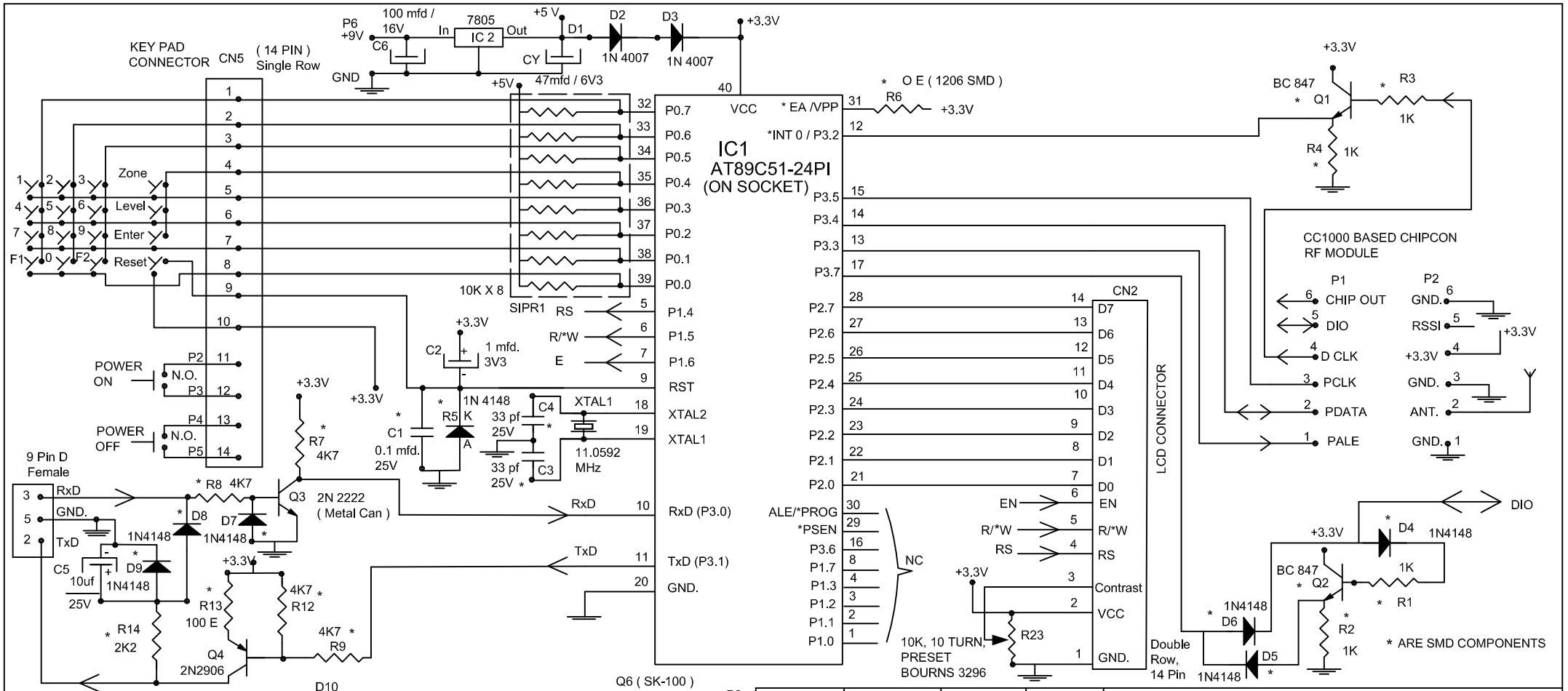

02	SONANI	PURANIK	13.12.2004	CIRCUIT MODIFIED.
01	SONANI	SELVAM	10.07.2004	CIRCUIT MODIFIED.
REV NO.	ALTERED	CHECKED	DATE	REVISION DETAILS
	NAME	SIGN.	DATE	
DRAWN	PARDESHI		08/03/04	
CHECKED	MURUGESH		08/03/04	
APPROVED	GVS/RR		08/03/04	

PRODUCT CODE : SR9E2

P-CB. NO. : 9E - 02 BOM. NO. : 3BM - 010 - 05

FILE : SED3/F/YOGI/4ED-197-00

ASIAN ELECTRONICS LTD.

Nashik

TITLE

SCHEMATIC FOR HANDHELD TRANSCEIVER (TWO WAY REMOTE CONTROLLER)

DOC. NO : 4ED-197-02

SHEET NO. : 1 OF 1

Asian Electronics Ltd.

BILL OF MATERIAL

Title:- BOM for HAND HELD TRANSCEIVER	**Doc. No.**	**3BM-010-05**	
WITH KEY PAD (SR9E2)			
Notes:-	**Rev.Date**	**TD/Selvam**	**13.12.04**
1) PCB NO. 9E-02	**T. pages.**	**2 No.**	
2) Drg. No. 4ED-197-02		**Name**	**Sign** **Date**
	Prepared	**Murugesh**	**6/11**
	Approved	**RR**	

PCB Indent No.	Item Code	Description	Qty	Manufacturer	Remarks
Resistor SMD					
R1-4		1K, 0.25W, 5% tol, 1206 Package	4		
R-5		0E, 0.25W, 5% tol, 1206 Package	1		
R6		10K, 0.25W, 5% tol, 1206 Package	2		
R7-9,12		4.7K, 0.25W, 5% tol, 1206 Package	4		
R13		100E, 0.25W, 5% tol, 1206 Package	1		
R14		2.2K, 0.25W, 5% tol, 1206 Package	1		
R23		56E,0.25W, 5% tol, 1206 Package	1		
Capacitors SMD					
C1		0.1ufd,25V,5% tol,1206 Package	1		
C3,4		33pfd,25V,2% tol,1206 Package	2		
Semiconductors SMD					
D4-9		Diode 1N4148, 1206 package	6		Rev.No.2
D10		Diode 1N4007, 1206 package	1		Rev.No.4,5
Q1,2		Transistor BC 847	2		
Resistor Thru Hole					
R15,R16,		1K,0.25W,CFR	2		Rev.No.4
					Rev.No.4,5
R17,R18		10K,0.25W,CFR	2		,4EC-127-00
SIPR1		10K, (SIP Resistor)	1		Rev.No.4
Capacitor Thru' hole					
C2,5,6		10ufd, 25V,Electrolytic	3		Rev.No.2, 4
CX		0.1ufd, 25V,Ceramic Disc	1		4EC-127-00,Rev No.5
Semiconductor Thru' Hole					
D2,3,13,14		Diode 1N4007	1		Rev.No.4
Q3		Transistor 2N2222,T.H.	1		Metal Can Package
Q4		Transistor 2N2906,T.H.	1		Metal Can Package
Q7		Transistor BC 547	1		Rev.No.4
Q6		Transistor SK-100	1		Rev.No.4
		(Metal Can Package)			
XTAL1		Crystal 11.0592 Mhz	1		Rev.No.2,5
		(Low Profile)			

	IC1		Atmel AT89C51, 40 pin	1	Atmel	Rev.No.2
			DIP Package			
	IC2		IC LM 7805 (Voltage Regulator)	1		Rev.No.2
			TO-220 Package			
	Others					
	J1-5,D1,D12		Jumper Wire	7		Rev.No.2, 4,5
			Dia.= 0.6mm, Pitch = 8mm			D12 is now in new position.
	CN2		Burg pin Double Row,Male 14 Pin	1		Rev.No.2,5
						,4EC-127-00
	CN5		Burg pin Single Row, Male 14 Pin	1		Rev.No.2,5
			Female 6 Pin	2		Rev.No.4
	IC Base		DIP,40 Pin	1		
			16 Key-Key Pad With Cable	1		Rev.No.4,5
			& (14 Pin) Connector Female			
	CHIPCON		Chipcon CC1000PP	1		**BOM: 3BM - 011 - 01**
	RF MODULE					
			OR			
	RF MODULE		Chipcon CC1000PPA	1		**BOM: 3BM - 012 - 00**
	PCB		PCB NO.SR9E-02	1		Rev.No.2, 4
			L=87mm, W=72mm, T=1.6mm.			
			Single Side, Glass Epoxy			
	LCD		LCD Module 16X1	1		
			Power Light KSLK 104478			Rev.No.5
	Connector		9 Pin Sub-D female Bucket Type	1		
			FRC connector 14 pin Double Row	1		Rev.No.5
			One Side Female ,Crimped			Rev.No.3, 4
			9Volt Battery Connector	1		
	BOX		LCD BOX	1	NIXXON	
			Top Door			
			Bottom Door			
	Sockets		Male DC Socket 20V	1		Rev.No.3
	Power Supply		Adaptor I/P120VAC / O/P 9VDC	1		Rev.No.3,5
	Hardwares		CSK Star head self threaded	4		Rev.No.3
			M4X20 MS screw			
			CSK Star head self threaded	2		Rev.No.3
			M3X8 MS screw			
			CSK Star Head Black Anodising	2		Rev.No.3
			M3X8 MS screw			

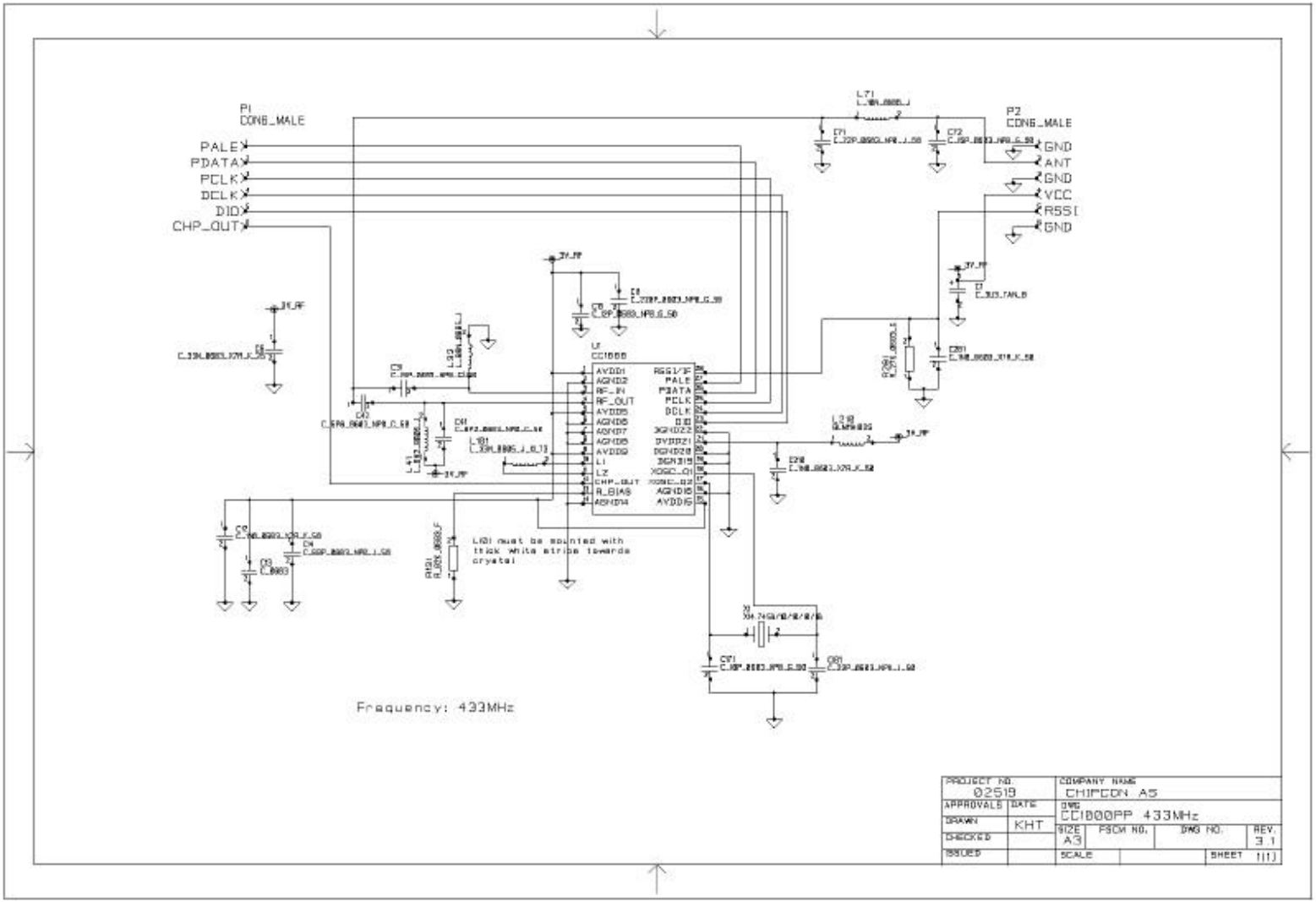
P1
CONB_MALE
PALE
PDATA
PCLK
DCLK
DIO
CHP_OUT
P2
CONB_MALE
GND
ANT
GND
VCC
RSSI
GND
U2
CC1000
AVDD1
AGND2
RF_IN
RF_OUT
AVDD5
AGND6
AGND7
AGND8
AVDD9
L1
L2
CHP_OUT
R_BIAS
AGND14
RSSI/IF
PALE
PDATA
PCLK
DCLK
DIO
DGND22
DVDD21
DGND20
DGND19
XOSC_Q1
AGND18
AVDD15
L2 must be mounted with
thick white stripe towards
crystal
Frequency: 433MHz
PROJECT NO.
02519
COMPANY NAME
CHIPCON AS
APPROVALS
DATE
DWG
CC1000PP 433MHz
DRAWN
KHT
CHECKED
ISSUED
SIZE
A3
PSCM NO.
DWG NO.
REV.
3.1
SCALE
SHEET 1(1)

Asian Electronics Ltd.

BILL OF MATERIAL

Title:- BOM for CHIPCON MODULE		**Doc. No.**	**3BM-011-01**
Notes:-		**Rev.Date**	
		T. pages.	**2 No.**
			Name **Sign** **Date**
		Prepared	**SJ/Selvam** **12.07.04**
		Approved	**RR**

PCB Indent No.	Item Code	Description	Qty	Manufacturer	Remarks
C1		Capacitor, tantal,3.3µF.			
C6		Capacitor 0603, 33nF, 10%			
C10		Capacitor 0603 ,12pF, 5%			
C11		Capacitor 0603,220pF, 5%			
C12		Capacitor 0603,1nF, 10%			
C13		Capacitor 0603, general			
C14		Capacitor 0603 ,68pF, 5%			
C31		Capacitor 0603 15pF, 2%			
C41		Capacitor 0603 ,8.2pF			
C42		Capacitor 0603, 5.6pF			
C71		Capacitor 0603, 22pF, 5%			
C72		Capacitor 0603 ,15pF, 2%			
C171		Capacitor 0603 ,18pF, 2%			
C181		Capacitor 0603, 22pF, 5%			
C210		Capacitor 0603 ,1.0nF, 10%			
C281		Capacitor 0603, 1.0nF, 10%			
L32		Inductor 0805, 68nH, 5%			
L41		Inductor 0805,6.2nH, 5%			
L71		Inductor 0805,10nH, 5%			
L101		Inductor 0805,33nH, 5%			
L210		EMI filter bead		BLM11A102S	
				Murata	
P1		6 Pin male-row connector			
P2		6 Pin male-row connector			
R131		Resistor 0603,82kW, 1%			
R281		Resistor 0603,27kW, 2%			
U1		CC1000		chipcon	

	X1		CRYSTAL, X14.7456MHz 1			