USER GUIDE

P/N: G-000045-00 EN RevA

Smart Smoke Alarm (RGSAR-RW)

Smart Smoke + Carbon Monoxide Alarm (RGCUAR-RW)

QR CODE TBD

1. Download the Ring app
2. Scan to start setup
3. Follow in-app instructions

WHAT'S IN THE BOX

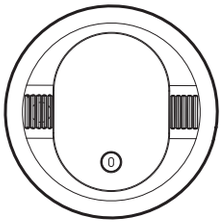

Alarm

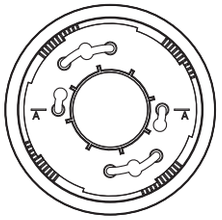

Mounting Bracket

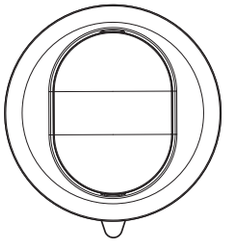

Dust Cover

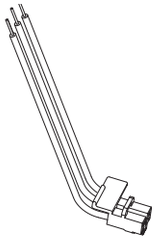

AC Quick Connector

User Guide

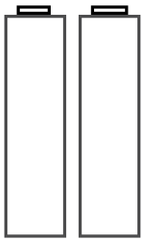

Two (2) AA Batteries

YOU'LL ALSO NEED

Mobile Phone or Tablet [1] (iOS or for Android™ [2])

Access to a 2.4GHz Wi-Fi network, and a compatible 802.11b/g/n router

ring The Ring app[3]

120V AC Power Connection (to power the alarm)

Additional tools such as a ladder, and screwdriver for installation

1. Requires iOS 14 or later, or Android 9 and up.
2. Android is a trademark of Google LLC.
3. Download from Apple App Store or Google Play Store.

NOTE: You cannot start Wi-Fi or Wireless Interlink setup without AC power connected. After setup/enrollment are complete, Wi-Fi features will not function without AC power present, but Wireless Interlink features will function if AC power is lost.

Register your device with Kidde for customer support and warranty information at kidde.com/register.

The National Fire Protection Association (NFPA) and the manufacturer recommend replacing this alarm after ten years.

For Ring app or Ring connectivity questions, visit website https://ring.com/support/contact-us
For all other questions, call Kidde Product Support: 1-877-542-5471.
Please write down the below information and have this at hand when you call.

Model: _____

Date Code (on back): _____

Date of Purchase: _____

Where Purchased: _____

Date to Replace: _____

THANK YOU FOR PURCHASING THIS ALARM

Models included in this User Guide:

Model	Type	120VAC	AA Backup Batteries	Voice	CO
RGSAR-RW	Smoke	**Yes**	**Yes**	**Yes**	No
RGCUAR-RW	Smoke / CO	**Yes**	**Yes**	**Yes**	**Yes**

These models are capable of three modes of connectivity:

1 . Hardwire Interconnect: Units communicate with each other using AC wiring.
2. Wireless Interlink: Units communicate with each other using RF wireless signals (if applicable).
3. Wi-Fi: Units send notifications to a mobile device using the Ring app.

⚠ **WARNING:** Mobile alert services are ancillary to the product and for informational purposes only. They are not intended or suitable for life safety or critical purposes nor do these services take the place of third-party life safety monitoring services. This product's smart phone or tablet notifications require a stable Wi-Fi connection, and are only as reliable as your home Wi-Fi network.

NOTE: The app receives regular updates. The paper or online copy of your user guide will most likely lag behind the app's regular updates. Visit Kidde.com to find and download or print the latest user guide.

Optional 24/7 Smoke & CO Monitoring service with Emergency Response
Trained agents can request emergency help in case of alarm.*

*A compatible Ring subscription is required for 24/7 Smoke and CO Monitoring. Service available within the U.S. (all 50 states, but not U.S. territories). Ring does not own its monitoring center. Smoke and carbon monoxide monitoring is not available for business or commercially zoned addresses. See Ring Alarm licenses at: ring.com/licenses. Additional fees may be required for permits, false alarms, or Alarm Verified Guard Response, depending on your local jurisdiction.

Teach children how to respond to the alarm and that they should never play with the unit. This alarm is a multi-criteria device. Smoke models are designed to detect smoke, and combination smoke/CO models are designed to detect both smoke and carbon monoxide from any source of combustion in a residential environment. It is not designed for use in a recreational vehicle (RV) or boat.

NOTE: Please thoroughly read this user guide and save the document for future reference and to pass on to any subsequent owner. Images are representative only. Actual product may vary slightly.

Contents

1. Smoke Alarm: What To Do When The Alarm Sounds 5
2. Other Alarm Visual And Audible Indicators 6
3. Troubleshooting Guide 8
4. Introduction, Product Features And Specifications 10
5. Limitations Of Smoke And Carbon Monoxide Alarms 12
6. Recommended Locations For Smoke And Carbon Monoxide Alarms . . .14
7. Locations To Avoid 17
8. Alarm Installation 18
9. Setting Up Wireless Interlink Alarm Network (if applicable) 24
10. Adding Another Device to an Existing Alarm Network 27
11. Resetting a Device's Wireless Settings 27
12. Operation And Testing 28
13. Recognizing Nuisance Alarms 30
14. Batteries 31
15. Carbon Monoxide Alarm: What To Do When The Alarm Sounds 32
16. General Carbon Monoxide (CO) Information 32
17. Cleaning Your Alarm 34
18. Good Safety Habits 36
19. Service And Warranty 39

1. Smoke Alarm: What To Do When The Alarm Sounds

The smoke alarm pattern is three long beeps with voice “Fire!,” a 1.5 second pause, and three long beeps repeating. The red LED blinks in time with the alarm pattern only on the alarm(s) that detected the hazard (initiating alarm).

The smoke alarm takes precedence when both smoke and carbon monoxide are present.
(only combination smoke/CO models detect carbon monoxide)

- Alert small children in the home as well as anyone else that might have difficulty recognizing the importance of the alarm sounding or that might have difficulty leaving the area without help.
- Plan two ways out! Leave immediately by your escape plan. Don’t waste time getting dressed or picking up valuables.
- While leaving, don’t open any inside door without first feeling its surface. If hot, or if you see smoke seeping through cracks, don’t open that door! Instead, use your alternate exit. If the inside of the door is cool, place your shoulder against it, open it slightly and be ready to slam it shut if heat and smoke rush in.
- If the escape route requires you to go through smoke, stay close to the floor where the air is cleaner. Crawl if necessary, and breathe shallowly through a cloth, wet if possible.
- Once outside, go to your selected meeting place and make sure everyone is there.
- Call the fire department or 911 from your cell phone outside, or from your neighbor’s home-not from yours!
- Don’t return to your home until the fire officials say that it is all right to do so.

NOTE: See Section RECOGNIZING NUISANCE ALARMS, for nuisance alarm situations.

2. Other Alarm Visual And Audible Indicators

Operational Mode	Visual Indications	Audible Indications	Action / Note
Normal (standby)	AC power: Green LED on continuously. DC power: Green LED blinks approx every 60 sec.		
Test (Test/Hush button press when no alarm condition is present) (Note: Test is very loud, stand a few feet away.)	Red LED blinks in time with alarm pattern.	Smoke Models: • Single beep. • 3 long beeps, voice "Fire!," 3 long beeps. Combination Smoke/CO Models: • Single beep. • 3 long beeps, voice "Fire!," 3 long beeps, 4 quick beeps, voice "Warning, Carbon Monoxide," 4 quick beeps.	Perform Test/Hush button press once a week to verify proper alarm operation.
Smoke or CO Alarm Memory (unit has experienced a smoke or CO alarm event, or has detected 100ppm CO or greater.) (CO only on combination smoke/ CO models)	Smoke: Red LED blinks every 15 sec. CO (combination smoke/CO models only): 2 red LED blinks every 15 sec.	After Test/Hush button push, voice "Smoke previously detected" or "Carbon monoxide previously detected." (combination smoke/CO models only)	NOTE: Alarm memory is only retained for 24 hrs. Push Test/Hush button to clear Alarm Memory.
Smoke Alarm Hush™ Mode	Red LED blinks every 2 sec. (only on the initiating alarm)	After button push, voice "Hush Mode Activated." Smoke alarm pattern stops. If there is too much smoke to allow Hush™, voice "Too much smoke, alarm cannot be hushed." (smoke alarm pattern continues)	This feature is to be used only when a known alarm condition, such as smoke from cooking, activates the alarm. Push button during Hush™ to clear Hush™ and perform a test.
CO Alarm Reset (combination smoke/ CO models only)	None	After Test/Hush button push: CO alarm pattern stops.	Unit is confirming if CO is present or if it experienced a nuisance situation. Re-alarm means danger. Exit to fresh air and call 911.
Locate (only applies to Wireless Interlinked units)	None	After Test/Hush button push on non-initiating unit, only initiating unit continues alarm pattern.	Use this to quickly locate the alarm source and determine if alarm is nuisance or real.
Initiating Alarm (multiple alarms in an interconnected system)	Red LED blinks in time with alarm pattern indicating that this is the unit initiating the alarm in an interconnected, multiple alarm, system. NOTE: It is possible for more than one unit to detect a hazard and become an initiating alarm unit (Red LED blinking).	Unit in either Smoke or CO alarm mode.	

Operational Mode	Visual Indications	Audible Indications	Action / Note
Wi-Fi enrollment begins (when the unit is first connected to AC power)	Blue LED blinks once per second.	Voice "Ready for Wi-Fi setup. Follow quick start instructions."	Follow the steps on the bottom of page 1 of this User Guide.
Wi-Fi enrollment completed	Blue LED blinks 3 times per second for 5 seconds.	Voice "Wi-Fi Setup Complete."	Repeat Wi-Fi enrollment with each alarm.
Wireless Interlink Start (if applicable)	Red LED blinks every second.	Voice “Ready for Wireless Interlink. Follow quick start instructions.”	
Wireless Interlink Pairing (if applicable)	Red LED blinks twice every two seconds.	Voice “Searching for other devices” is announced once.	
Wireless Interlink Pairing Connected (if applicable)	Red LED blinks 3 times every 2 seconds until the network is closed.	Voice “Success, now connected” when interlink is connected.	Repeat Wireless Interlink with each alarm.
Wireless Interlink Pairing Closed (if applicable)	After network is closed, red LED stops blinking, green LED on continuous with AC power.	Voice “Setup complete. [number of devices] devices connected,” when the network is closed.	

3. Troubleshooting Guide

If you require further information please contact Product Support at 1-877-542-5471 or write us at: Kidde, 1016 Corporate Park Drive, Mebane, NC 27302. Our internet address is www.kidde.com.

Trouble Condition	Visual Indications	Audible Indications	Action / Note
False Low Battery or Missing Battery (AC power is connected before backup batteries activated, or when battery is missing)	Amber LED blinks every 6 sec.	Chirp and voice "Activate Battery" every 60 sec. After 1 hour, voice occurs only once every 15 mins.	* Pull the battery pull tab to activate the batteries, or install batteries.
Low Battery	Amber LED blinks every 6 sec.	Chirp and voice "Low Battery"every 60 sec. After 1 hour, voice occurs only once every 15 mins. After button push, voice "Hush Mode Activated."	* Push Test/Hush button once to silence for 24 hrs. (Push Test/Hush button again to clear Hush™ and perform a test.) Note: After a maximum of 7 days after Low Battery begins, the notifications cannot be silenced. * Replace batteries as soon as possible.
Smoke Sensor Fault	Amber LED blinks every 60 sec.	3 chirps every 60 sec and voice "Clean the Alarm." After 1 hour, voice occurs only once every 15 mins.	* See Cleaning Your Alarm section. * Push Test/Hush button once to attempt to reset the unit. * If error continues, remove alarm, dispose unit, and replace as soon as possible.
CO Fault (combination smoke/CO models only)	Amber LED blinks 2 times every 60 sec.	3 chirps every 60 sec and voice "Replace Alarm." After 1 hour, voice occurs only once every 15 mins.	* Push Test/Hush button once to attempt to reset the unit. * If error continues, remove alarm, dispose unit, and replace as soon as possible.
Fatal Fault	Amber LED blinks 3 times every 60 sec.	3 chirps every 60 sec and voice "Replace Alarm." After 1 hour, voice occurs only once every 15 mins.	* Push Test/Hush button once to attempt to reset the unit. * If error continues, remove alarm, dispose unit, and replace as soon as possible.
End of Unit Life	Amber LED blinks 2 times every 60 sec.	2 chirps every 60 sec and voice "Replace Alarm." After 1 hour, voice occurs only once every 15 mins. Voice "Hush Mode Activated" after button push (first 7 days only).	* Push Test/Hush button once to silence for 24 hrs. (Push Test/Hush button again to clear Hush™ and perform a test.) Note: 7 days after End of Unit Life begins, the notifications cannot be silenced. * Remove alarm, dispose unit, and replace as soon as possible.
Failure to connect to Wi-Fi router during setup due to incorrect Wi-Fi password.	Green LED turns off, red LED gives 3 rapid blinks every other second, repeated 3 times, Green LED turns on.	Voice "Wi-Fi Not Connected" will announce one time.	* Check your router WiFi 2.4 GHz SSID and/or password and enter it correctly. * If above step fails, reset wireless settings and start over.

Trouble Condition	Visual Indications	Audible Indications	Action / Note
Failure to connect to Wi-Fi during setup for any other reason.	Green LED turns off, red and blue LEDs alternate every second, repeated 3 times, Green LED turns on.	Voice "Wi-Fi Not Connected" will announce one time.	* Check your router functionality and internet connection. * Reset wireless settings and allow device to search for network. * If above step fails, remove device from mounting bracket, rotate 90 degrees, and re-install device onto mounting bracket. Then reset wireless settings and allow device to search for network.
Wi-Fi communication failure (device fails to connect to a functioning Wi-Fi router) (NOTE: The Wi-Fi features do not function without AC power present.)	Green LED turns off, red and blue LEDs alternate blinking every 2 sec.	None	* Check your router functionality and internet connection. * Reset wireless settings and start over. * If above step fails, remove device from mounting bracket, rotate 90 degrees, and re-install device onto mounting bracket. Then reset wireless settings and allow device to search for network. * Contact customer service. If error persists, or if customer service directs, remove alarm, dispose unit, and replace as soon as possible.
Loss of Wi-Fi Connection on a previously connected device (NOTE: The Wi-Fi features do not function without AC power present.)	Blue and amber LEDs alternate blinking once every minute.	None	* The unit will attempt to re-connect on its own. After 10 consecutive mins of lost connection, you will receive a notification of "Contact Lost" in your mobile App. * Check your router functionality and internet connection. * Reset wireless settings and start over. * If above step fails, remove device from mounting bracket, rotate 90 degrees, and re-install device onto mounting bracket. Then reset wireless settings and allow device to search for network. * Contact customer service. If error persists, or if customer service directs, remove alarm, dispose unit, and replace as soon as possible.
Wi-Fi setup was not completed	Green LED will turn off once per minute and the blue LED will blink.	None	* This is a reminder to finish setting up the Wi-Fi device. * Reset wireless settings and start over.
Wireless Interlink connection lost or Wireless Interlink creation failed (if applicable)	Amber LED blinks every 30 sec.	1 chirp every 30 sec and voice every 60 sec "Wireless Interlink Connection Lost." After 1 hour, voice occurs only once every 15 mins. Voice "Hush Mode Activated" after button push.	* Push Test/Hush button to temporarily silence for 24 hrs. (Push Test/Hush button again to clear Hush™ and perform a test.) * Remove device from mounting bracket, rotate 90 degrees, and re-install device onto mounting bracket. * If above step fails, reset wireless settings on the "lost connection" device and start over. * If above step fails, try another location for this device, or swap it with another wireless interlinked unit to see if the problem continues. If yes, there could be interference or distance issues. * Contact customer service. If error persists, or if customer service directs, remove alarm, dispose unit, and replace as soon as possible.
Searching for Wireless Interlink Network (if a device has lost connection)	Red LED blinks every sec.	None	* No immediate action. The device has lost connection and is searching for the network. If the lost connection persists, follow the steps in the row above.
MCU Failure	None	Constant Tone	* Remove alarm, dispose unit, and replace as soon as possible.
Stuck Test/Hush Button or Side Enrollment Button	Amber LED blinks 4 times every 60 sec.	3 chirps every 60 sec.	* Push button to dislodge it from being stuck. If button cannot be unstuck, remove alarm, dispose unit, and replace as soon as possible.

4. Introduction, Product Features And Specifications

Introduction

This alarm detects products of combustion using a photoelectric sensor and carbon monoxide (on combination smoke/CO models only) using an electrochemical cell. Many times throughout this User Guide, we will refer to Carbon Monoxide as “CO.”

Ten (10) years after the unit was installed, powered up, and tested, this unit will automatically alert you that it is time to replace the unit. This is called “End of Unit Life” mode. See Troubleshooting Guide. To help identify the date to replace the unit, a label has been affixed to the side of the alarm. Write the “Install date” in the space provided, and then write in the “Replace by” date (10 years from initial power up) in permanent marker on the label prior to installing the unit. For combination smoke/CO models, two labels have been provided that have important information on what to do in case of a CO alarm. Place one label at eye level on a wall near the alarm after it is mounted, and one near a fresh air source such as a door or window, where you plan to gather after the alarm indicates the presence of carbon monoxide.

Product Features and Specifications:

- Powered by 120VAC (60 Hz, 85 mA max) wire-in connector with 2 AA backup batteries
- Reduced nuisance alarms
- Self-testing (see Operation and Testing section)
- Voice message system
- Easy installation
- Hardwire Interconnectable to other compatible alarms
- Wireless Interlink to other compatible alarms (if applicable)
- Wi-Fi Compatible to Mobile Device (Requires 802.11b/g/n (2.4GHz) Wi-Fi)
- Smoke Alarm Hush™
- Smoke Sensor: Photoelectric
- CO Sensor: Electrochemical (combination smoke/CO models only)
- Temperature Operating Range: 40°F (4.4°C) to 100°F (37.8°C)
- Humidity Operating Range: up to 95% (smoke models) and 10 to 95% (combination smoke/CO models) RH, non-condensing
- Audible Alarm: 85+ dB at 10’, 3.0 to 3.5 KHz pulsing , with voice messages “Fire!” and/or “Warning! Carbon Monoxide”

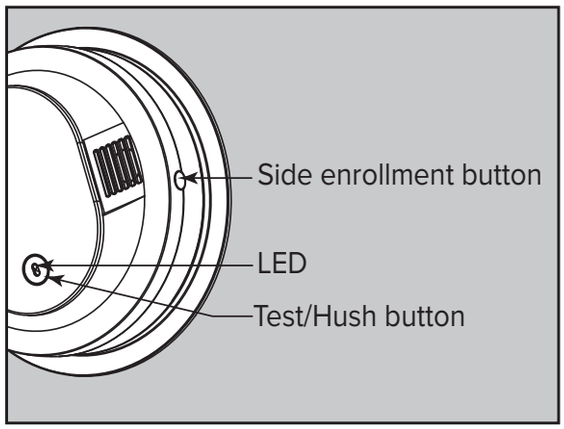

Figure 4

NOTE: You cannot start Wi-Fi or Wireless Interlink setup without AC power connected. After setup/enrollment are complete, Wi-Fi features will not function without AC power present, but Wireless Interlink features will function if AC power is lost.

AC Wired Interconnect Model Capability

AC models have AC hardwire interconnect capability. When one hardwired interconnect unit sounds an alarm, all other compatible hardwire or interconnected units will also alarm.

NOTE: AC wiring must be completed properly and the AC quick connector must be attached to the unit for the hardwire interconnect function to work.

The following models can be interconnected using the standard AC wiring interconnect: i12020, i12020A, i12040, i12040A, i12060, i12060A, i12080, i12080A, i4618A, i4618AC, KN-SMFM-I, RF-SM-ACDC, PE120, P12040, Pi2000, Pi2010, KN-COSM-I, KN-COSM-IB, KN-COSM-IBA, KN-COPE-I, KN-COB-IC, SL177i, SLED177i, HD135F, SM120X*, CO120X*, i12010S, i12010SCO, P4010ACSCO, P4010ACSCO-W, P4010LACS-W, P4010ACS, P4010ACS-W, P4010ACLEDS, P4010ACLEDS-2, P4010ACLEDSCO, P4010ACLEDSCO-2, 3050-VAS10-A, 3050-VASC10-A, P4010ACS-WF, P4010ACSAQ-WF, P4010ACSCO-WF, P4010ACSCOAQ-WF, 900-CUAR, 900-CUAR-V, 20SAR, 20SA10, 20SA10-V, 30CUAR, 30CUAR-V, 30CUA10, 30CUA10-V, RGSAR-RW, RGCUAR-RW, 20SAR-W, 30CUAR-W.

* Relay SM120X / CO120X have limits on what types of models (smoke or CO) they interconnect with.

Wireless Interlink (if applicable)

These models have Wireless Interlink capability. When one Wireless Interlinked unit sounds an alarm, all other compatible Wireless Interlinked units will also alarm.

NOTE: Wireless Interlink steps must be completed for the Wireless Interlink function to work. The following models can be interconnected using the Wireless Interlink feature: RGSAR-RW, RGCUAR-RW.

Notifications to a Mobile Device

These models have Wi-Fi capability, and can send alarm signals and other notifications to a mobile device. The Ring app is required, along with a home Wi-Fi router and internet. (Requires 802.11b/g/n (2.4GHz) Wi-Fi)

5. Limitations Of Smoke And Carbon Monoxide Alarms

⚠ WARNING: PLEASE READ CAREFULLY AND THOROUGHLY

- Life safety from fire in residential occupancies is based primarily on early notification to occupants of the need to escape, followed by the appropriate egress actions by those occupants.
- There are situations where a smoke alarm may not be effective to protect against fire as stated in the NFPA Standard 72. For instance:

  a) smoking in bed

  b) leaving children home alone

  c) cleaning with flammable liquids, such as gasoline
- Fire warning systems for dwelling units are capable of protecting about half of the occupants in potentially fatal fires. A smoke alarm may not be effective in some situations, such as during incendiary fires where the fire grows so rapidly that an occupant's egress is blocked even with properly located smoke alarms, or when victims are intimate with the fire (for example, when a person's clothes catch fire while cooking), too old or young, or physically or mentally impaired such that they cannot escape even when warned early enough that escape should be possible. For these people, additional strategies such as protection-in-place or assisted escape or rescue are necessary. *
- This model meets the latest residential smoke alarm standards, which includes enhanced resistance to nuisance alarms from cooking. Industry experts recommend that both ionization and photoelectric smoke alarms be installed to help ensure optimal detection of the various types of fires that can occur within the home. Ionization sensing alarms may detect invisible fire particles (associated with fast flaming fires) sooner than photoelectric alarms. Photoelectric sensing alarms may detect visible fire particles (associated with slow smoldering fires) sooner than ionization alarms.
- A battery powered alarm must have a battery of the specified type, in good condition and installed properly.
- Smoke alarms must be tested regularly to make sure the battery and the alarm circuits are in good operating condition.
- Smoke alarms cannot provide an alarm if smoke does not reach the alarm. Therefore, smoke alarms may not sense fires starting in chimneys, within walls, on roofs, on the other side of a closed door or other obstructions.
- If the alarm is located outside the bedroom or on a different floor, it may not wake up a sound sleeper.

- The use of alcohol or drugs may also impair one's ability to hear the smoke alarm. For optimal detection, a smoke alarm should be installed in each sleeping area on every level of a home.

This alarm is not intended to alert hearing impaired individuals.

* Reference National Fire Protection Association (NFPA) standard 72

⚠ WARNING: PLEASE READ CAREFULLY AND THOROUGHLY

IMPORTANT: Combination smoke/CO alarms are designed to detect carbon monoxide gas from ANY source of combustion. They are NOT designed to detect any other gas.

⚠ CAUTION: Combination smoke/CO alarms will only indicate the presence of carbon monoxide gas at the sensor. Carbon monoxide gas may be present in other areas. Never restart the source of a CO problem until it has been fixed. NEVER IGNORE THE ALARM!

⚠ WARNING: COMBINATION SMOKE/CO ALARMS ARE INTENDED FOR USE IN ORDINARY INDOOR LOCATIONS OF FAMILY LIVING UNITS. THEY ARE NOT DESIGNED TO MEASURE COMPLIANCE WITH OCCUPATIONAL SAFETY AND HEALTH ADMINISTRATION (OSHA) COMMERCIAL OR INDUSTRIAL STANDARDS. THEY ARE NOT SUITABLE FOR INSTALLATION IN HAZARDOUS LOCATIONS AS DEFINED IN THE NATIONAL ELECTRIC CODE. THEY ARE NOT DESIGNED FOR USE IN A RECREATIONAL VEHICLE (RV) OR BOAT.

- The installation of combination smoke/CO alarms should not be used as a substitute for proper installation, use, and maintenance of fuel burning appliances, including appropriate ventilation and exhaust systems.
- Combination smoke/CO alarms do not prevent CO from occurring, nor can they solve any existing CO problem.

⚠ WARNING: COMBINATION SMOKE/CO ALARMS ARE DESIGNED TO HELP PROTECT INDIVIDUALS FROM ACUTE EFFECTS OF CARBON MONOXIDE EXPOSURE. THEY WILL NOT FULLY SAFEGUARD INDIVIDUALS WITH SPECIFIC MEDICAL CONDITIONS. IF IN DOUBT, CONSULT A MEDICAL PRACTITIONER. INDIVIDUALS WITH MEDICAL PROBLEMS MAY CONSIDER USING WARNING DEVICES WHICH PROVIDE AUDIBLE AND VISUAL SIGNALS FOR CARBON MONOXIDE CONCENTRATIONS UNDER 30 PPM. *

- Combination smoke/CO alarms have not been investigated for carbon monoxide detection below 70 PPM.
- This device requires a continuous supply of electrical power from a healthy battery or AC connection, depending on the model. It will not work without power.

* Reference Underwriters Laboratories (UL) standard 2034.

6. Recommended Locations For Smoke And Carbon Monoxide Alarms

- Locate smoke alarms in all sleeping areas. Try to monitor the exit path as the bedrooms are usually farthest from the exit. If more than one sleeping area exists, locate additional alarms in each sleeping area.
- Locate additional alarms in stairways, because stairways act like chimneys for smoke and heat.
- Locate at least one alarm on every floor level.
- Locate an alarm in every bedroom.
- Locate an alarm in every room where electrical appliances are operated (i.e. portable heaters or humidifiers).
- Locate an alarm in every room where someone sleeps with the door closed. The closed door may prevent an alarm not located in that room from waking the sleeper.
- Smoke, heat, and combustion products rise to the ceiling and spread horizontally. Mounting the smoke alarm on the ceiling in the center of the room places it closest to all points in the room. Ceiling mounting is preferred in ordinary residential construction.

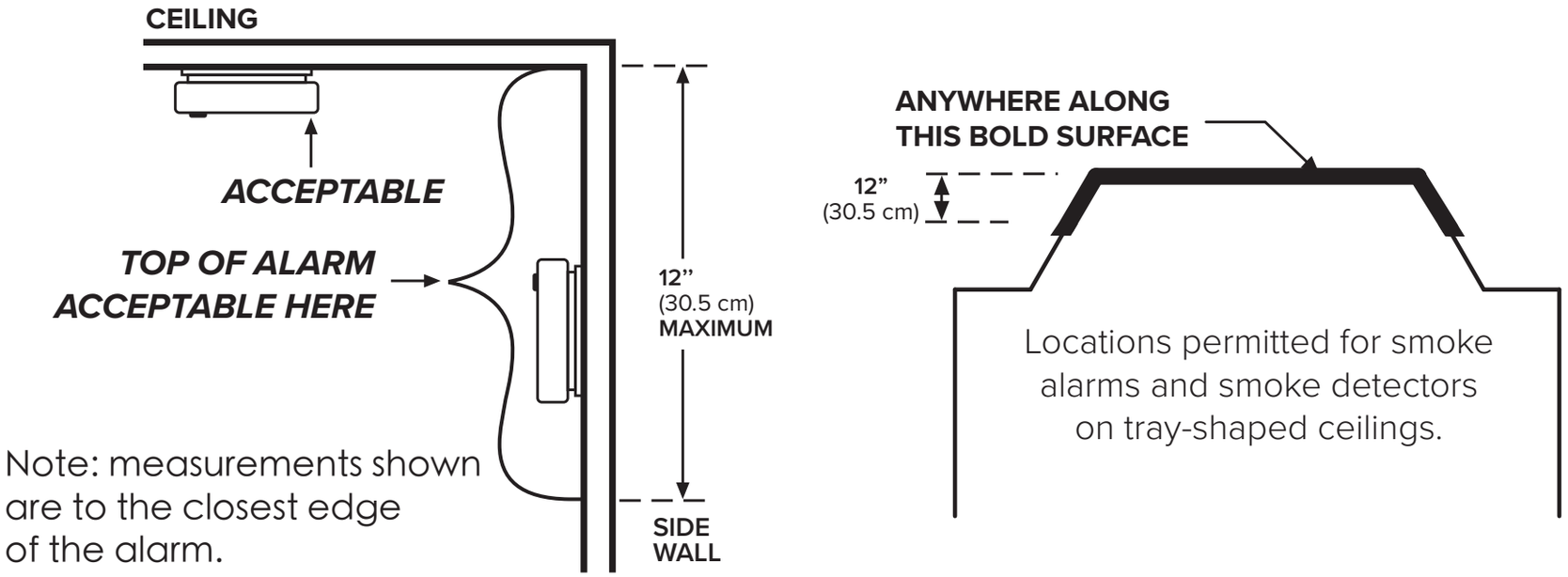

Figure 6-A

NFPA 72 states: "Smoke alarms in rooms with ceiling slopes greater than 1 ft in 8 ft (0.3m in 2.4 m) horizontally shall be located on the high side of the room." NFPA 72 states: "A row of detectors shall be spaced and located within 3 ft (0.9m) of the peak of the ceiling measured horizontally."

SINGLE FLOOR PLAN

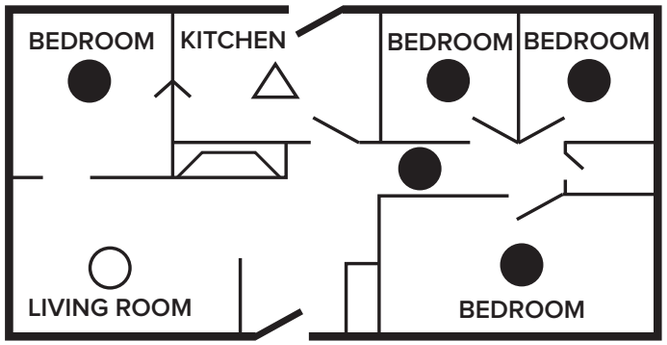

● Smoke Alarms for Required Detection
○ Smoke Alarms for Additional Detection
△ Not within 6ft (1.8m) of appliances

MULTIPLE FLOOR PLAN

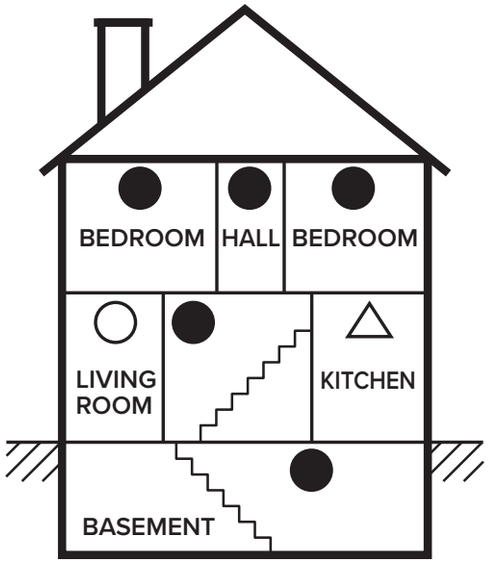

Figure 6-B

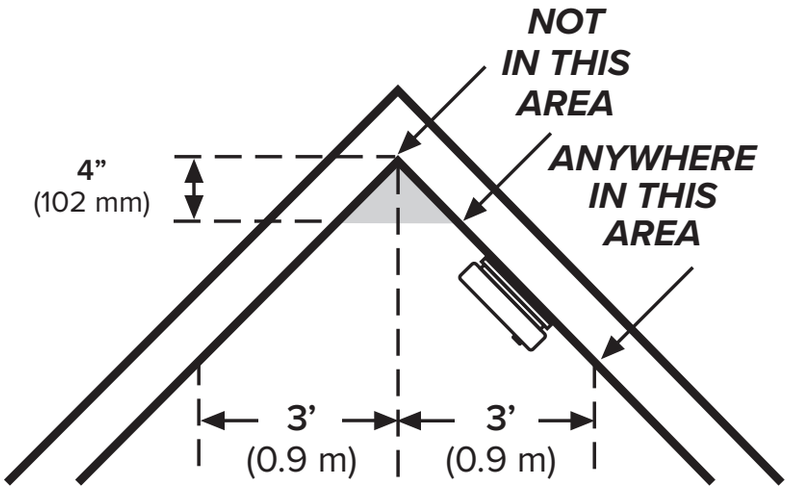

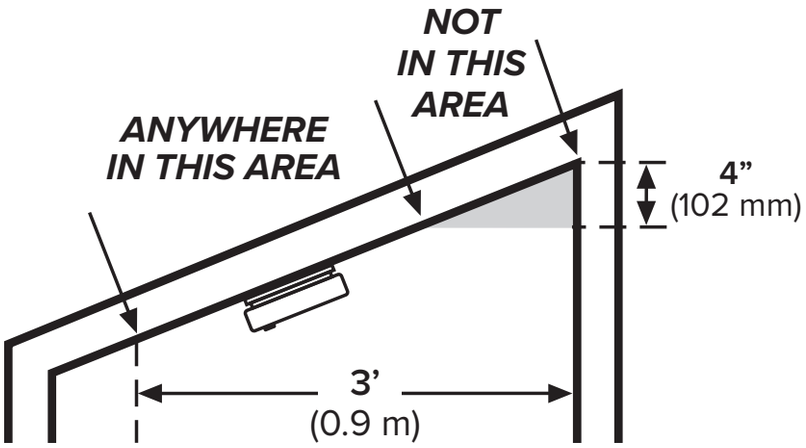

Figure 6-C

- For mobile home installation, select locations carefully to avoid thermal barriers that may form at the ceiling. For more details, see MOBILE HOME INSTALLATION section.
- When mounting the alarm on the wall, use an inside wall with the top edge of the alarm at a maximum of 12” (30.5 cm) below the ceiling.
- Put smoke alarms at both ends of a bedroom hallway or large room if the hallway or room is more than 30ft (9.1 m) long.
- Install Smoke Alarms on sloped, peaked or cathedral ceilings at or within 3ft (0.9m) of the highest point (measured horizontally).
- Industry experts recommend a CO alarm be installed on each level of the home-ideally on any level with fuel burning appliances and outside of sleeping areas.

This equipment should be installed in accordance with the National Fire Protection Association’s 72 (National Fire Protection Association, Batterymarch Park, Quincy, MA 02269).

Mobile Home Installation

Modern mobile homes have been designed and built to be energy efficient. Install smoke alarms as recommended above. In older mobile homes that are not well insulated compared to present standards, extreme heat or cold can be transferred from the outside to the inside through poorly insulated walls and roof. This may create a thermal barrier which can prevent the smoke from reaching an alarm mounted on the ceiling. In such units, install the smoke alarm on an inside wall with the top edge of the alarm a maximum of 12” (30.5 cm) below the ceiling.

If you are not sure about the insulation in your mobile home, or if you notice that the outer walls and ceiling are either hot or cold compared to the room air temperature, install the alarm on an inside wall. NFPA 72 (National Fire Protection Association) requires smoke alarms be installed in each sleeping area.

⚠ WARNING: TEST YOUR ALARM OPERATION AFTER MOBILE HOME HAS BEEN IN STORAGE OR UNOCCUPIED, AND AT LEAST ONCE A WEEK DURING USE.

7. Locations To Avoid

(See Figures 6-A, 6-B, & 6-C for recommended locations)

- In the garage. Products of combustion are present when you start your automobile.
- Normal cooking may cause nuisance alarms. If a kitchen alarm is desired, it should have an alarm silence feature and should not be installed within 6 ft (1.8m) of cooking appliances.
- Do not install within 6 ft (1.8m) of heating appliances.
- Less than 4” (10cm) from the peak of an “A” frame type ceiling.
- In an area where the temperature may fall below 40°F (4.4°C) or rise above 100°F (37.8°C), such as garages and unfinished attics.
- In dusty areas. Dust particles may cause nuisance alarms or a failure to alarm.
- In very humid areas (above 95% RH, non-condensing) as moisture or steam can cause nuisance alarms.
- In insect-infested areas.
- Smoke alarms should not be installed within 3 ft (0.9m) of the door to a bathroom containing a tub or shower, forced air supply ducts used for heating or cooling, ceiling or whole house ventilating fans, or other high air flow areas.
- Near lights. Electronic “noise” generated by the lights may cause nuisance alarms.
- Do not install near vents, flues, or chimneys.
- Do not install near fans, doors, windows or areas directly exposed to the weather.
- Avoid installing where the unit will be exposed to direct sunlight.

NOTE: Smoke alarms are not to be used with detector guards unless the combination (alarm and detector guard) has been evaluated and found suitable for that purpose.

8. Alarm Installation

NOTE: Do not power your smart alarm until prompted in the Ring app to ensure best Wi-Fi enrollment results.

NOTE: You cannot start Wi-Fi or Wireless Interlink setup without AC power connected. After setup/ enrollment are complete, Wi-Fi features will not function without AC power present, but Wireless Interlink features will function if AC power is lost.

NOTE: A dust cover has been installed on the alarm. Keep the dust cover on until all construction has been completed for at least 24 hours (drywall, painting, varnishing, mounting plate install, etc). Retain the dust cover and re-install it to protect the alarm during future construction projects. Construction dust and chemicals can cause contamination and false alarms.

⚠ **WARNING: DUST COVER MUST BE REMOVED FOR ALARM TO OPERATE.**

NOTE: Single station alarms are units that are not connected to other alarms in any manner, including hardwire interconnect or wireless interlink.

- Single station alarms (including these Wi-Fi and Wireless Interlink models, if used as a single station alarm) CANNOT send or receive alarm signals to other alarms in your home.
- These units will emit a series of LED blinks, tones, and voices as the unit(s) search for a Wi-Fi or Wireless Interlink alarm network. If you are intending to use these units without the Wi-Fi or Wireless Interlink function, ignore these notifications, and the Wi-Fi will turn off in about 15 minutes and Wireless Interlink functions will turn off in another 5 minutes. You can turn the Wi-Fi or Wireless Interlink functions on again at a later date if desired (see Section Resetting a Device's Wireless Settings).

STEP 1:

Wiring Requirements

- AC alarms should be installed on a UL Listed or recognized junction box. All connections should be made by a qualified electrician and all wiring used shall be in accordance with articles 210 and 300.3(B) of the U.S. National Electrical Code ANSI/NFPA 70, NFPA 72 and/or any other codes having jurisdiction in your area. The multiple station interconnect wiring to the alarms must be run in the same raceway or cable as the AC power wiring. In addition, the resistance of the interconnect wiring shall be a maximum of 10 ohms.

- The maximum wire run distance between the first and last unit in an interconnected system is 1000 feet.
- The appropriate power source is 120 Volt AC Single Phase supplied from a non-switchable circuit.
- These alarms are not designed, agency tested or certified for recessed mounting and should not be installed in this manner. Recessed mounting impedes smoke entry into the smoke chamber, which may prevent the alarm from sounding in a timely manner. This could endanger the lives of occupants in the residence. These alarms are designed, tested and certified for wall (if applicable) and ceiling surface mount only.

⚠ **WARNING: AC ALARMS CANNOT BE OPERATED FROM POWER DERIVED FROM A SQUARE WAVE, MODIFIED SQUARE WAVE OR MODIFIED SINE WAVE, INVERTER. THESE TYPES OF INVERTERS ARE SOMETIMES USED TO SUPPLY POWER TO THE STRUCTURE IN OFF GRID INSTALLATIONS, SUCH AS SOLAR OR WIND DERIVED POWER SOURCES. THESE POWER SOURCES PRODUCE HIGH PEAK VOLTAGES THAT WILL DAMAGE THE ALARM.**

Wiring Instructions for AC Quick Connector Harness

⚠ **CAUTION:** Turn off the main power to the circuit before wiring the alarm.

- For alarms that are used as single station, DO NOT CONNECT THE RED WIRE TO ANYTHING. Leave the red wire insulating cap in place to make certain that the red wire cannot contact any metal parts or the electrical box.
- When alarms are hardwire interconnected, all interconnected units must be powered from a single circuit.
- A maximum of 24 Kidde Safety devices may be interconnected in a multiple station arrangement. The interconnect system should not exceed the NFPA interconnect limit of 12 smoke or smoke/CO combination alarms and/or 18 alarms total (smoke, CO, smoke/CO combination, heat, etc.). With 18 alarms interconnected, it is still possible to interconnect up to a total of 6 remote signaling devices and/or relay modules.
- Figure 8-A illustrates interconnection wiring. Improper connection will result in damage to the alarm, failure to operate, or a shock hazard.

Figure 8-A, Interconnect Wiring Diagram

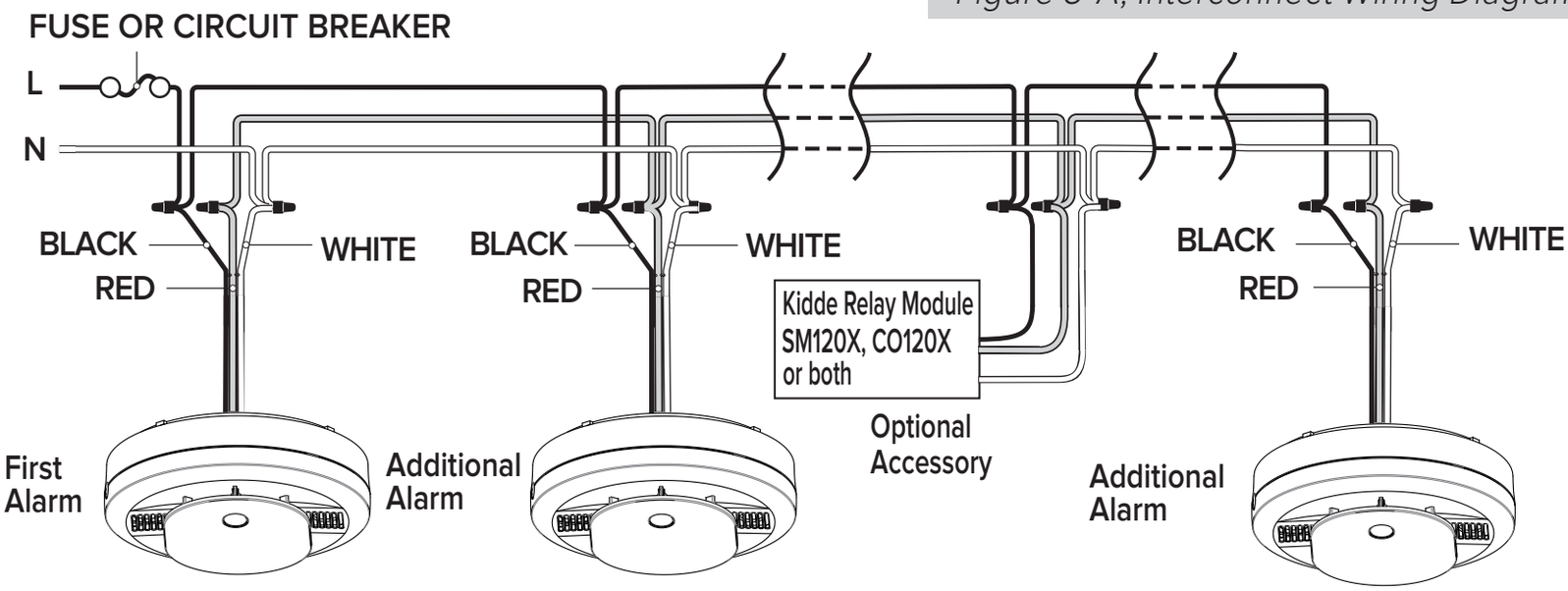

Wires on alarm harness:	Connected to:
Black:	Hot side of AC line
White:	Neutral side of AC line
Red:	Interconnect lines (red wires) of other units in the multiple station set-up

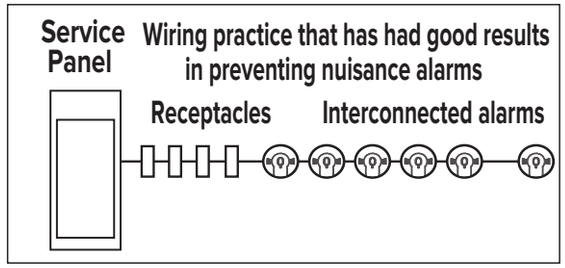

Figure 8-B

- Make certain alarms are wired to a continuous (non-switched) power line.

NOTE: Use standard UL Listed household wire (as required by local codes) available at all electrical supply stores and most hardware stores.

NOTE: AC power should be turned off at this stage.

- For best results to minimize nuisance alarms, interconnected alarms should be on a dedicated line. If not on a dedicated line, it is suggested that the smoke alarms share a lighting load circuit that does not have a dimmer associated with it. If receptacles must be placed on the same line it is suggested that they be placed ahead of the smoke alarms (see Figure 8-B). This will prevent large voltage drops from occurring between the first and last alarm in the circuit.

NOTE: Attaching AC power first, without removing the battery pull tab, or without installing all batteries in the correct orientation, will result in a false low battery trouble condition chirp (see Troubleshooting Guide). You need to activate or install the batteries to eliminate the false low battery trouble condition chirps. Remove the battery pull tab (see Figure 8-C) or install all batteries in the correct orientation (see Figure 14-B) to avoid false low battery notification. Battery activation is confirmed with a beep. If the beep does not occur when the battery pull tab is removed, or when batteries are replaced, remove the batteries and reinstall them in correct orientation. Confirm the battery activation beep.

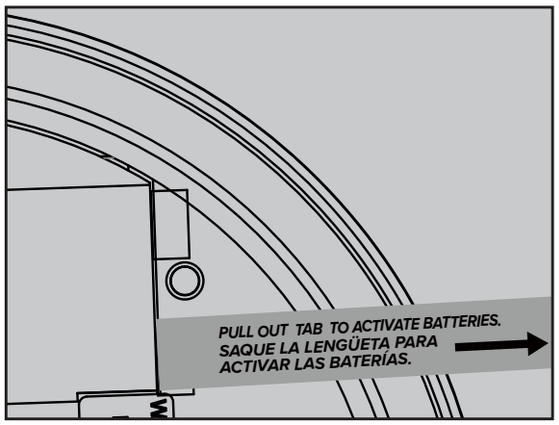

Figure 8-C

STEP 2:

After selecting the proper location for your alarm, and wiring the AC QUICK CONNECTOR harness as described previously, attach the mounting bracket to the electrical box using the existing screws. To ensure aesthetic alignment of the alarm with the hallway, or wall, the “A” line on the mounting bracket should be parallel with the hallway when ceiling mounted or horizontal when wall mounted. (See Figure 8-D)

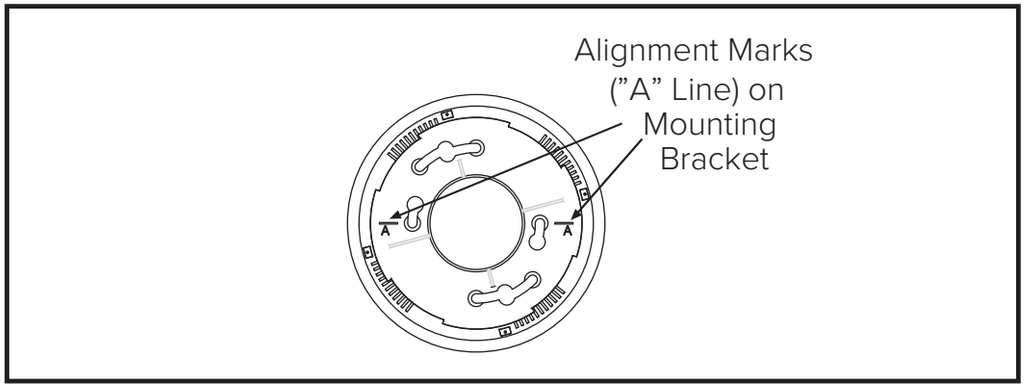

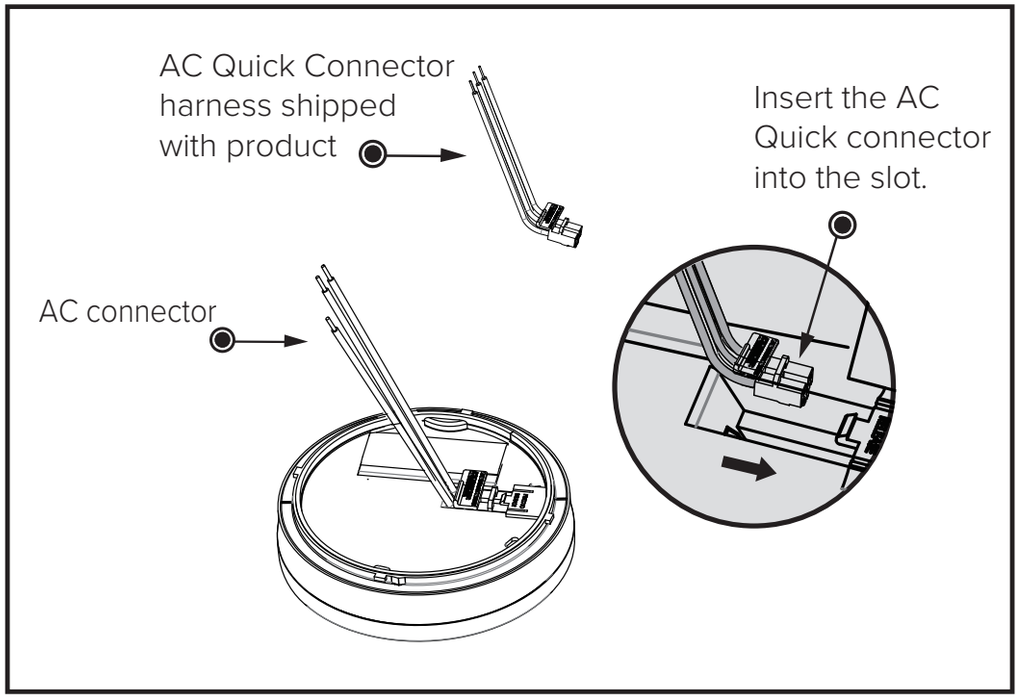

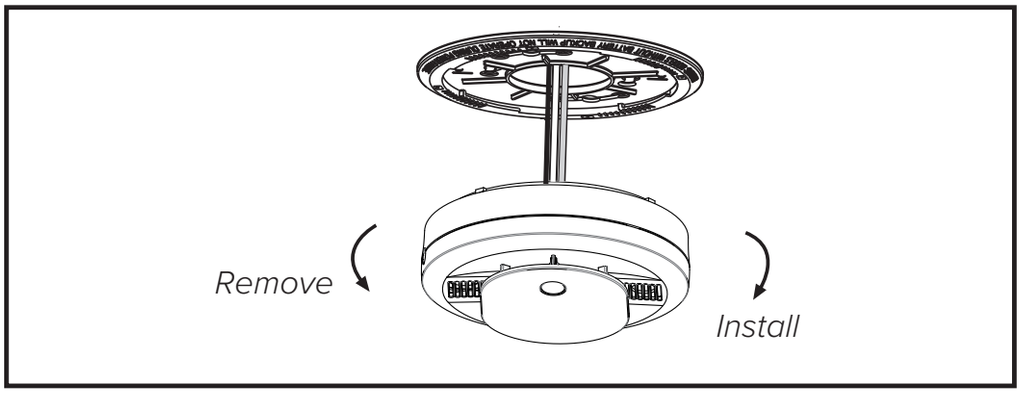

Figure 8-D

STEP 3:

Pull the AC QUICK CONNECTOR through the center hole in the mounting bracket and secure the bracket, making sure that the mounting screws are positioned in the small ends of the keyholes before tightening the screws.

STOP If you are installing for Wi-Fi functionality, and have not yet downloaded the Ring App, do not connect your Wi-Fi unit to the AC quick connect harness or mounting bracket yet. Follow the steps at the bottom of page 1. If you are not using the Wi-Fi function, then proceed with the following steps.

STEP 4:

Plug the AC QUICK CONNECTOR into the back of the unit, making sure that the connector snaps into place. Then push the excess wire back into the electrical box through the hole in the center of the mounting bracket.

STEP 5:

Install the alarm fully on the mounting bracket by rotating the alarm in a clockwise direction (Figure 8-F).

NOTE: The alarm will mount to the bracket in 4 positions (every 90 degrees).
NOTE: If either battery is missing, the alarm cannot mount on the mounting bracket.
NOTE: Do not grab the shield to install or remove the alarm. Grab the alarm by the outside of the enclosure (Figure 8-E).

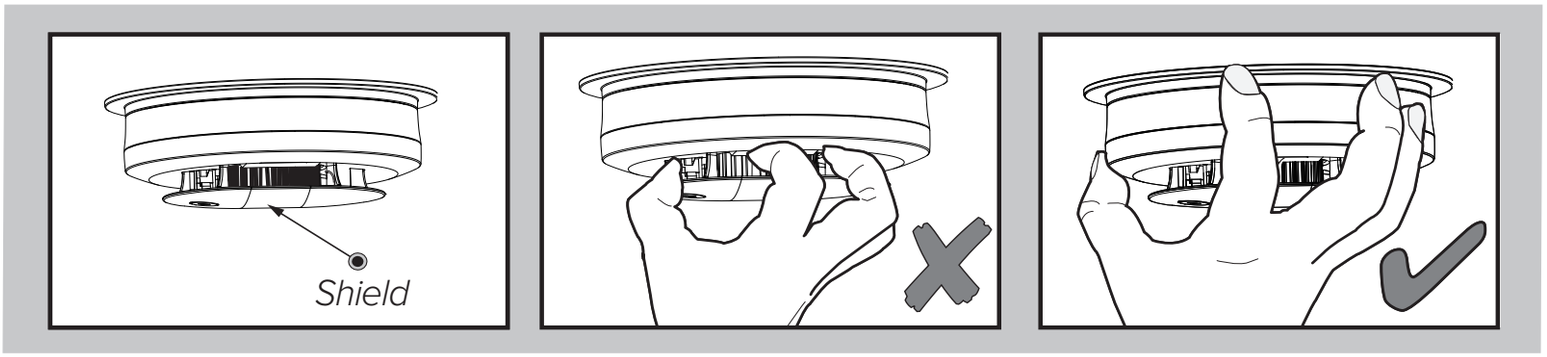

Figure 8-E

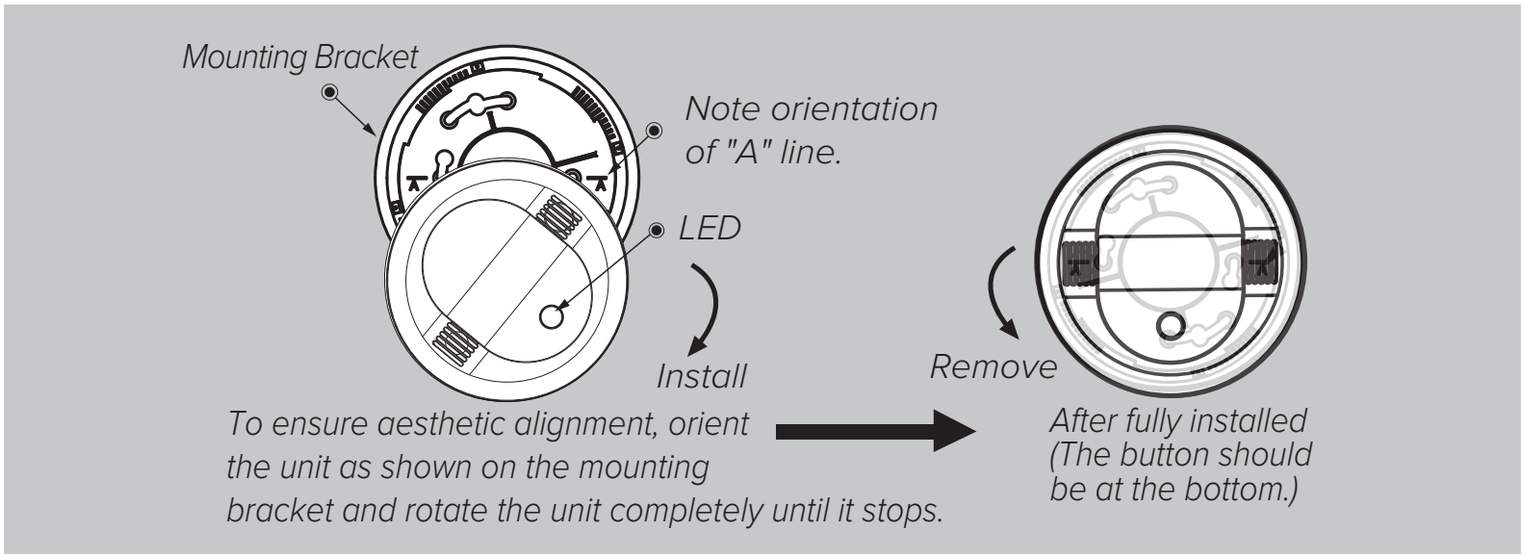

Figure 8-F

STEP 6:

Turn on the AC power. The green LED will illuminate briefly when AC power is applied, and then the blue LED will begin to blink once per second as the unit searches for a Wi-Fi connection for about 15 minutes.

NOTE: If you are intending to use these units without the Wi-Fi, the Wi-Fi will turn off in about 15 minutes or you can push the side enrollment button quickly (Figure 8-G) to exit Wi-Fi setup, and the device will automatically move into Wireless Interlink setup (Section 9).

STEP 7:

Follow the in-app instructions to finish the Wi-Fi setup and installation process. When Wi-Fi setup is complete, a voice will announce “Wi-Fi Setup Complete,” and the blue LED will blink 3 times per second for 5 seconds.

STEP 8:

If you have completed Wi-Fi enrollment as explained in the app, the Wireless Interlink setup will start automatically.

If you only have one device, wait 5 minutes for Wireless Interlink setup to timeout and then the device will change to Normal (standby) operational mode. A voice will announce “Wireless Interlink not connected” once.

If you have multiple Wireless Interlink devices, refer to Section 9: Setting Up Wireless Interlink Alarm Network.

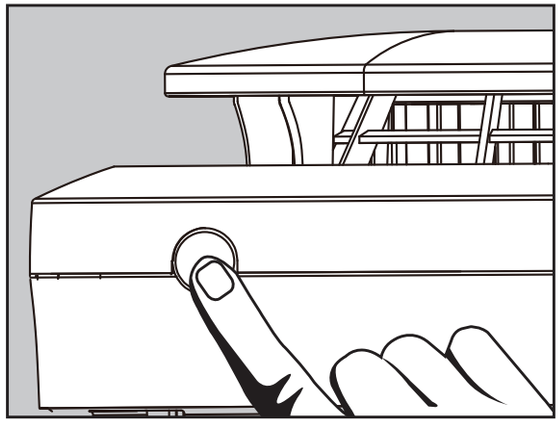

Figure 8-G

9. Setting Up Wireless Interlink Alarm Network (if applicable)

⚠ **CAUTION:** This wireless enabled alarm is solely intended for use in ordinary indoor locations of single-family homes. It is not designed for outdoor applications, multi-family homes, multi-apartment buildings or other commercial building applications. The range and performance of any wireless device will vary depending on its surroundings.

NOTE: Sections 9 through 11 explain the steps of how to complete Wi-Fi and Wireless Interlink enrollments. The following table shows basic scenarios you may encounter during setup, and gives direction for each scenario.

Scenario	Action
Wi-Fi setup completed, Wireless Interlink setup completed.	None
Wi-Fi setup completed, Wireless Interlink skipped or timed out.	Section 9, Step 1
Wi-Fi setup skipped or timed out, Wireless Interlink setup completed.	No action if you don't plan to use Wi-Fi features. To setup Wi-Fi, Section 11, Factory Reset.
Update Wi-Fi network credentials (changing a router, for example).	Section 11, Update Wi-Fi Network Credentials

For adding multiple devices to a Wireless Interlink Network, follow Step 1 below to place all devices into Wireless Interlink start operational mode.

IMPORTANT: These Wireless Interlink devices are not compatible with earlier Kidde RF/ Wireless legacy devices.

NOTE: If you plan to ONLY use the Wireless Interlink feature, without Wi-Fi, skip the Wi-Fi setup process by pressing the side enrollment button once. This will automatically start the Wireless Interlink setup.

STEP 1:

The device will enter Wireless Interlink start mode for 5 minutes after completing Wi-Fi Setup, or if you push the side enrollment button to skip the Wi-Fi setup. When the Wireless Interlink setup process is initiated, the red LED will blink every second, and a voice will announce “Ready for Wireless Interlink. Follow quick start instructions.”

NOTE: If you have completed Wi-Fi enrollment as explained in the app (or if you have skipped the Wi-Fi setup), and the Wireless Interlink timeout (5 minutes) has expired, you may restart Wireless Interlink enrollment with a single short press of the side enrollment button, and then proceed with the rest of this section.

NOTE: If no further steps are taken within 5 minutes of starting the Wireless Interlink setup process, a voice prompt, “Wireless Interlink Not Connected” will be heard once, and the Wireless Interlink function will turn off. Press the side enrollment button once to reopen the Wireless Interlink network and restart Wireless Interlink enrollment, or see Section 11 to reset wireless settings.

Example setup flow showing 3 devices being enrolled:

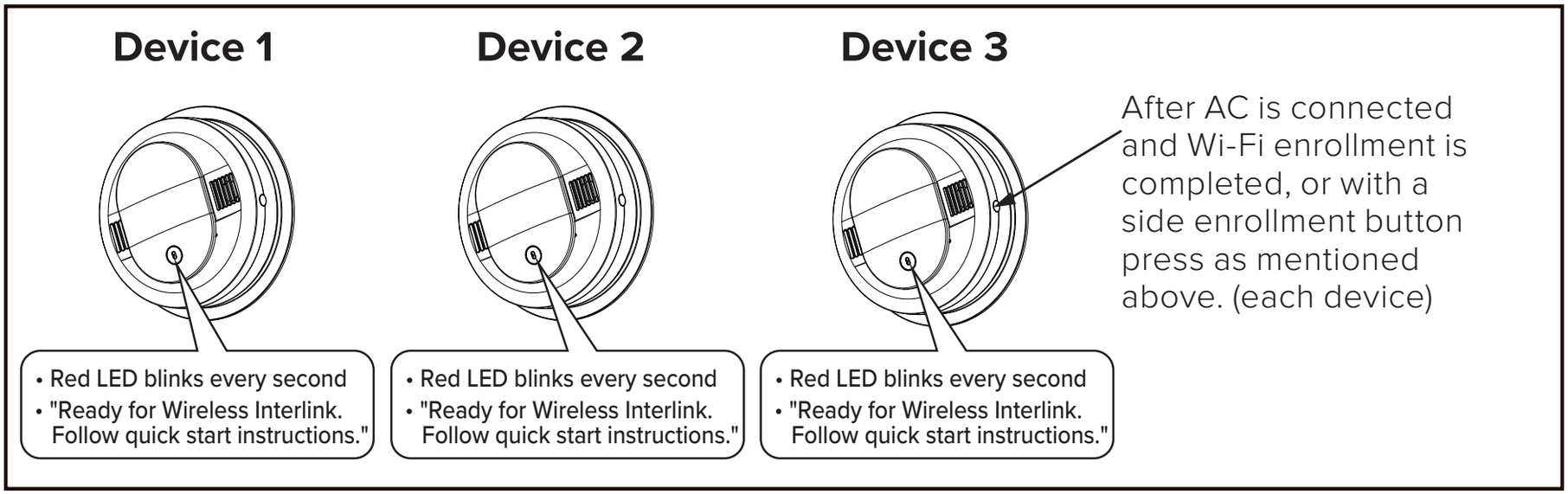

STEP 2:

Press the side enrollment button on any device to start Wireless Interlink pairing. the red LED will blink twice every two seconds, and a voice will announce “Searching for other devices.”

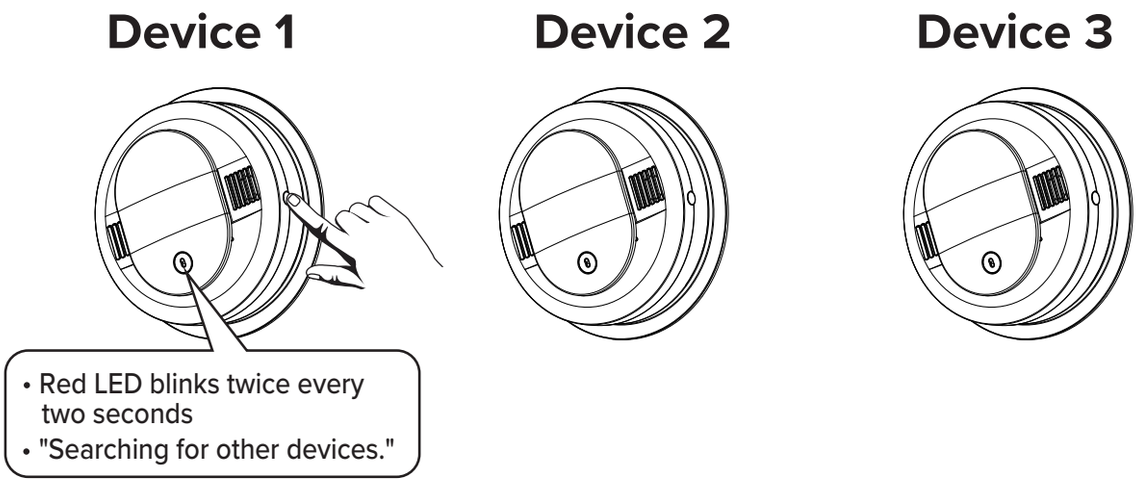

Device 1 becomes the “Network Creator” and starts the Wireless Interlink pairing process.

STEP 3:

After each unit is paired in the Wireless Interlink network, the red LED will blink three times every two seconds until the network is closed, or a timeout of 5 minutes maximum. A voice will announce “Success, now connected.” Continue enrolling each device to be included in the Wireless Interlink network, and confirm the voice “Success, now connected” on each device.

After a short period, all devices in Wireless Interlink Start Mode will automatically start connecting to the Network Creator. This might happen simultaneously or with a small delay between each device.

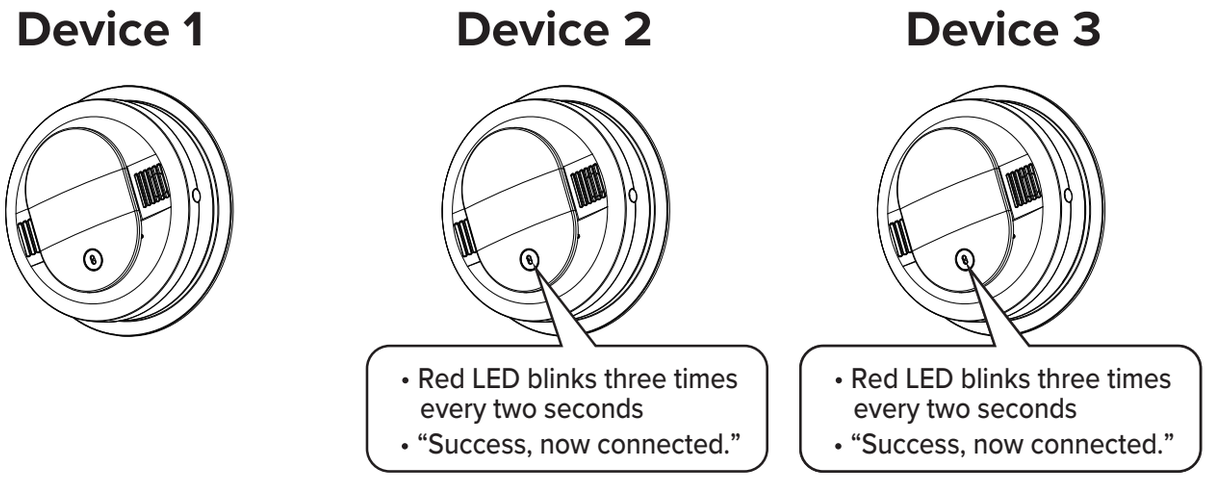

NOTE: *Network Creator has a 5 min timeout that is refreshed every time a new device is joined, so the User can connect all devices at the same time, or one by one within 5 min intervals.*

STEP 4:

Close the Wireless Interlink network by pressing the side enrollment button on any one enrolled device. The red LED will stop blinking, and the green LED will be on continuous if AC power is applied, or will blink every 60 seconds if operating on battery power only. A voice will announce “Setup complete. [number of devices] devices connected.” **NOTE:** After pushing the button, the process of closing the Wireless Interlink may take up to 30 seconds.

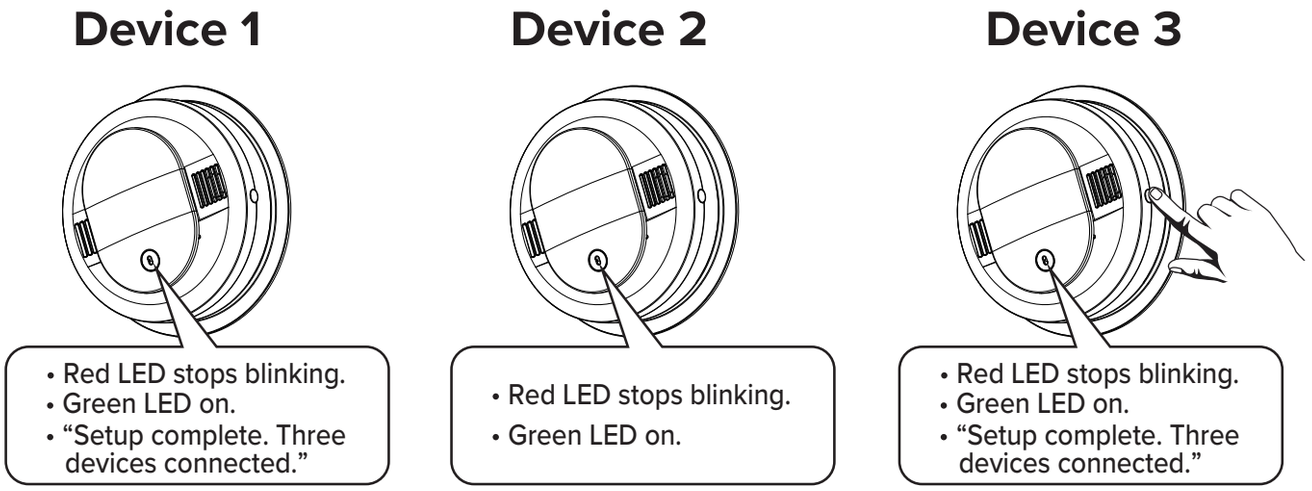

NOTE: *The voice “Setup complete. Three devices connected.” will be heard on whichever device the side enrollment button is pushed, and also always on the Network Creator.*

⚠ **CAUTION:** Multiple Wireless Interlink networks in the same dwelling are not supported. If a device fails to join the same (single) Wireless interlink network due to distance or other location hindrances, relocate the device in order to form only one Wireless Interlink network.

NOTE: Make sure the number of connected devices announced matches the total number of Wireless Interlink devices installed at the property. If the numbers do not match, redo the wireless interconnect setup with a single short press of the side enrollment button on any Wireless Interlink device.

NOTE: At any time during Wireless Interlink setup, if you have a problem, you can push and hold the side enrollment button on any problem unit for about 8 seconds (you will hear 3 beeps after 8 seconds), and then release the button. The unit will reset the unit’s wireless settings (described in Section 11) Once wireless settings are reset, the unit will prompt the user to follow Quickstart instructions and start over.

After Wi-Fi and Wireless Interlink setup, the alarm is now activated! After installation / activation, test your alarm as described in Operation and Testing section.

⚠ **WARNING: FAILURE TO PROPERLY CONNECT AC POWER AND INSTALL BATTERIES IN THE CORRECT ORIENTATION WILL PREVENT PROPER OPERATION OF THIS ALARM AND WILL PREVENT ITS RESPONSE TO FIRE AND/OR CO HAZARDS.**

10. Adding Another Device to an Existing Alarm Network

For various reasons, you might want to add additional units to your existing Wi-Fi or Wireless Interlink alarm network. Modifying your existing Wi-Fi or Wireless Interlink alarm network is easy and user-friendly. Be sure to start with the steps in the Alarm Installation section, installing AC wiring and mounting bracket, if not already completed.

- To add another unit to your existing Wi-Fi alarm network, start with Section 8, Alarm Installation, and then follow the app instructions. **NOTE:** The Wi-Fi enrollment process has a 15 minute timeout. If you experience a timeout, follow the steps in Section 11 to start over.
- To add another unit to your existing Wireless Interlink alarm network (if applicable), push the side enrollment button on any Ring model in your existing Wireless Interlink alarm network, and then follow the steps in Section 9. **NOTE:** The Wireless Interlink enrollment process has a 5 minute timeout. If you experience a timeout, follow the steps in Section 11 to start over.
- If you want to add another unit to BOTH the Wi-Fi and Wireless Interlink alarm networks, start with the instructions in the app for setting up Wi-Fi, and then follow the steps for Wireless Interlink setup described in Section 9.

---

11. Resetting a Device's Wireless Settings

This device offers the ability to update Wi-Fi Network Credentials or Factory Reset the wireless settings if needed.

Update Wi-Fi Network Credentials:

If your home equipment (router for example), or password has changed, or for any other reason that might be preventing Wi-Fi connectivity, use the following steps:

NOTE: The Wi-Fi features do not function without AC power present.

STEP 1:

Begin Wi-Fi Network Credentials reset

- Press and hold the side enrollment button on the device for 4 seconds.
- The device will beep once when the button is first pressed.
- After 4 seconds, the device will beep twice.
- Release button.

STEP 2:

The blue LED will flash once per second. A voice will announce “Ready for Wi-Fi setup, follow quick start instructions.” Follow app instructions.

Factory Reset:

If you have troubles during Wi-Fi enrollment or if the Wireless Interlink features fail to enroll properly for some reason, it is possible to reset the device back to factory settings and start over.

STEP 1:

- Press and hold the side enrollment button on the device for 8 seconds.
- The device will beep once when the button is first pressed.
- After 4 seconds, the device will beep twice. (continue holding the button)
- After 8 seconds, the device will beep three times.

STEP 2:

Release button. A voice will announce “Resetting wireless settings.”

STEP 3:

The blue LED will flash once per second. A voice will announce “Ready for Wi-Fi setup, follow quick start instructions.” Device has been reset to factory settings and will start over with Wi-Fi enrollment (follow app instructions), followed by Wireless Interlink enrollment (Section 9).

NOTE: If no further steps are taken within 15 minutes of starting the Wi-Fi setup process, a voice prompt, “Wi-Fi Not Connected” will be heard once, and the Wi-Fi function will turn off.

---

12. Operation And Testing

This model meets the latest residential smoke alarm standards, which includes enhanced resistance to nuisance alarms from cooking.

Operation

The alarm is operating once it is activated and testing is complete (see “TESTING” below). When products of combustion (smoke for smoke only models, and smoke or CO for combination smoke/CO models) are sensed, the unit sounds a loud alarm with voice messages. See Sections 1 and 2 for alarm signal descriptions. In high levels of CO, the unit will go into alarm in a shorter period of time than at low levels of CO (combination smoke/CO models only).

CO ALARM SENSOR RESPONSE TIMES
(Combination smoke/CO models only)
At 70 PPM, the unit must alarm within 60-240 minutes.
At 150 PPM, the unit must alarm within 10-50 minutes.
At 400 PPM, the unit must alarm within 4-15 minutes.

Testing

⚠ **WARNING:** Do not attempt to test this unit with retail “canned smoke” products. Those products are intended for use by trained professionals and produce inconsistent results when misused. Over-application of canned smoke can permanently damage the alarm.

Self -Testing

This model is equipped with internal, self-testing components that are always checking to ensure the device is operating as expected. (Weekly manual testing is still required. See below.)

Manual Testing

NOTE: When pushing the Test/Hush button, use only your finger or thumb. Using any other instrument(s) (such as a broom handle) is strictly prohibited, as it may damage the alarm.

Test your alarm weekly by pressing and releasing the Test/Hush button quickly (Figure 12). A quick beep will confirm the Test/Hush button has been pushed followed by the test sequence. See Other Alarm Visual and Audible Indicators table. The alarm and voice (and any interconnected units) will sound if the electronic circuitry, horn, speaker, and batteries are working. If the alarm or voice does not sound, or gives erratic or low volume sound, the unit must be replaced.

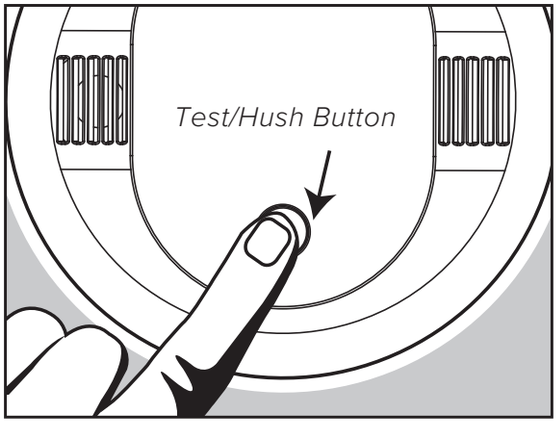

Figure 12

NOTE: If you push the Test/Hush button on your alarm, the app will send you a text message.

⚠ **WARNING:** Due to the loudness of the alarm, always stand about 2.5 ft (0.8 m) away from the unit or use ear protection when testing.

⚠ **WARNING:** Do not use an open flame to test your alarm, you could damage the alarm or ignite combustible materials and start a structure fire.

Chirping

If your device begins chirping for End of Unit Life, Low Battery, or Lost Connection, you can temporarily silence these chirps by pressing the Test/Hush button. Other fault /error chirps cannot be silenced. Take appropriate action as described in the Troubleshooting Guide.

⚠ **WARNING: REPLACE UNIT AS SOON AS POSSIBLE WHEN IN END OF UNIT LIFE. SEVEN (7) DAYS AFTER END OF UNIT LIFE BEGINS, THE NOTIFICATIONS CANNOT BE SILENCED, AND SMOKE AND/OR CO DETECTION CANNOT BE GUARANTEED. REPLACE IMMEDIATELY!**

13. Recognizing Nuisance Alarms

Smoke Nuisance

This model meets the latest residential smoke alarm standards, which includes enhanced resistance to nuisance alarms from cooking.

HUSH™: If you know why the alarm is sounding, and you can verify that it is not a life threatening situation, you can push the Test/Hush button on the initiating unit (red LED blinking) to silence the alarm for 8-10 minutes. If the smoke is not too dense, that unit, and all interconnected units will silence. After the Hush™ period, the smoke alarm will automatically reset and sound the alarm if particles of combustion are still present. You can use Hush™ repeatedly until the air has been cleared of the condition causing the alarm.

NOTE: Dense smoke will override Hush™ and sound a continuous alarm. If no fire is present, check to see if one of the reasons listed in "Locations to avoid" may have caused the alarm. If a fire is discovered, get out and call the fire department or 911.

Cigarette smoke will not normally cause the unit to alarm, unless the smoke is blown directly into the alarm. Combustion particles from cooking may set off the alarm if it is located too close to a cooking appliance. Large quantities of combustible particles are generated from spills or when broiling. Using the fan on a range hood which vents to the outside (non-recirculating type) will also help prevent nuisance alarms from occurring by removing these combustible products from the kitchen.

Carbon Monoxide (CO) Nuisance (combination smoke/CO models only)

RESET: Pushing the Test/Hush button on a combination smoke/CO unit during CO alarm allows the unit to reset calculations and double check for the presence of CO. If the unit re-alarms within 6 minutes, it is sensing high levels of CO which can quickly become a dangerous situation. Exit to fresh air and call 911.

LOCATE:

In a Wirless Interlinked system (all units will be alarming together), a unit that detects smoke or CO and initiates an alarm is called the "initiating alarm unit." Initiating alarm units will be flashing the red LED during alarm. Depending on unit locations, and the location of the source of smoke or CO, it is possible to have more than one initiating unit. If you suspect a nuisance alarm situation, you can use this feature to help you locate the initiating alarm unit(s) in a wireless interlinked system. Push the button on any non-initiating wireless interlink unit, and ALL wireless interlink units EXCEPT the initiating alarm unit(s) will silence for two minutes. You can use the LOCATE feature repeatedly until you find the initiating alarm unit(s), or the air has been cleared of the condition causing the alarm.

NOTE: Hush™ and Locate features are dependent on the type of models in your interconnect system. Non-wireless models cannot receive the wireless Locate feature and will continue to alarm until the initiating unit is Hushed or the Smoke/ CO condition clears.

⚠ WARNING: ALTHOUGH RESET FEATURE CAN BE USED FOR CO ALARM EVENTS, IT IS IMPOSSIBLE TO DETERMINE THE SOURCE OF A CO ALARM USING SIGHT OR SMELL. ALWAYS CONSIDER A CO ALARM EVENT AS DANGEROUS.

14. Batteries

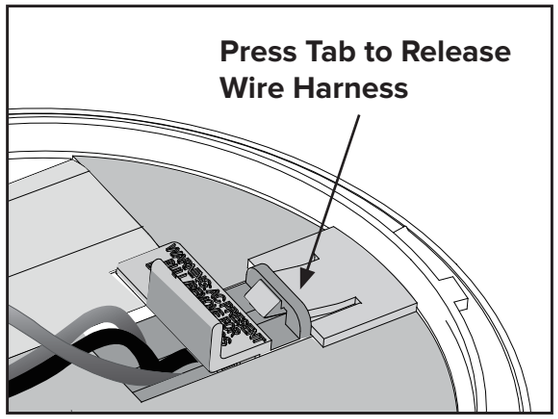

Figure 14-A

These models are powered with AC power, but also contain two replaceable AA backup batteries. Under normal conditions, fresh batteries will last at least one year. In order to access the battery compartment, the wiring harness needs to be removed. To release the wiring harness, press down on the tab as shown in Figure 14-A.

NOTE: Constant exposure to high or low humidity or temperatures may reduce battery life.

⚠ WARNING: THE ALARM IS SEALED AND THE COVER IS NOT REMOVABLE.

Low Battery

This alarm is equipped with a low battery monitor circuit. If the battery capacity is nearing the point where it can no longer provide adequate power for all alarm functions, the low battery condition will occur. See Troubleshooting Guide. The batteries must be replaced within 7 days of the first occurrence of the “Low Battery Warning” to provide continuous alarm detection.

Replace batteries with one of the following approved brands:
Energizer E91, Gold Peak 15A or Golden Power GLR6A.
These batteries can be purchased at your local retailer.

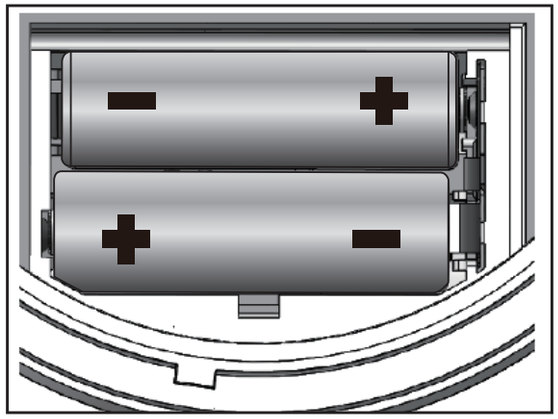

Figure 14-B

⚠ WARNING: Use only the batteries specified. Use of different batteries may have a detrimental effect on the alarm. Do not mix old and new batteries. Do not mix alkaline, standard, or rechargeable batteries.

NOTE: Do not use lithium batteries in this unit. A good safety measure is to replace the batteries at least once a year, or at the same time you change your clocks for daylight saving time. Loss of AC power and a missing or improperly installed battery will render the unit inoperable.

⚠ WARNING: Failure to properly connect AC power and install batteries in the correct orientation will prevent proper operation of this alarm and will prevent its response to fire and/or CO hazards.

Model	Type	120VAC	AA Backup Batteries	Voice	CO
RGCUAR-RW	Smoke / CO	Yes	Yes	Yes	Yes

15. Carbon Monoxide Alarm: What To Do When The Alarm Sounds

NOTE: Smoke only models do not detect carbon monoxide (CO), but will receive and transmit a CO alarm signal (with voice message) from an interconnected CO or combination smoke / CO alarm.

The carbon monoxide (CO) alarm pattern is four quick beeps with voice "Warning! Carbon Monoxide" repeating every 5 seconds. The red LED blinks in time with the alarm pattern only on the alarm(s) that detected the hazard (initiating alarm). On DC power only, after 4 minutes in CO alarm the alarm pattern will only occur every 60s.

⚠WARNING: CARBON MONOXIDE (CO) IS A COLORLESS, ODORLESS, POISONOUS GAS. YOU CAN'T TASTE, SEE, OR SMELL CO, BUT IT CAN KILL IN JUST MINUTES. THIS ALARM WILL SOUND IN A 4-BEEP PATTERN IF LIFE THREATENING LEVELS OF CO ARE DETECTED. IF THE ALARM SOUNDS:

1) Immediately evacuate all occupants from the space and go outdoors to fresh air.

2) Call emergency responders (911 or fire department) for help; notify the building or vehicle owner, as necessary.

EMERGENCY PHONE #: _____

Always consider a CO alarm to be dangerous. After emergency services responders have arrived, the premises has been aired out, and your alarm remains in its normal condition, it is important to call a qualified appliance technician to investigate for sources of CO from fuel burning equipment and appliances and inspect for proper operation of this equipment. If problems are identified during this inspection, have the equipment serviced immediately. Note any combustion equipment not inspected by the technician and consult the manufacturer's instructions or contact the manufacturer directly for more information about CO safety and this equipment. Make sure that motor vehicles are not or have not been operating in an attached garage or adjacent to the residence.

NOTE: See Section RECOGNIZING NUISANCE ALARMS, for nuisance alarm situations.

16. General Carbon Monoxide (CO) Information

Carbon monoxide (CO) is a colorless, odorless, and tasteless poison gas that can be fatal when inhaled. CO inhibits the blood's capacity to carry oxygen.

Possible Sources of CO

Inside your home, appliances used for heating and cooking are the most likely sources of CO. Vehicles and other combustion engines running in an attached garage and using a charcoal/gas grill or hibachi in an enclosed area are all possible sources of CO. Generators running in enclosed areas, such as garages or living spaces, will create CO. CO can be produced when burning any fossil fuel: gasoline, diesel, propane, natural gas, oil and wood. It can be produced by any fuel-burning appliance that is malfunctioning, improperly installed, or not ventilated correctly, such as: Furnaces/boilers, gas ranges/stoves, gas clothes dryers, water heaters, portable fuel burning space heaters, fireplaces, wood-burning stoves and certain swimming pool heaters. Blocked chimneys or flues, back drafting and changes in air pressure, corroded or disconnected vent pipes, or a loose or cracked furnace heat exchanger can also release CO into your building.

The following conditions can result in transient CO situations:

Excessive spillage or reverse venting of fuel-burning appliances caused by outdoor ambient conditions such as: Wind direction and/or velocity, including high gusts of wind, heavy air in the vent pipes (cold/humid air with extended periods between cycles), negative pressure differential resulting from the use of exhaust fans, simultaneous operation of several fuel-burning appliances competing for limited internal air, vent pipe connections vibrating loose from clothes dryers, furnaces/boilers, or water heaters, obstructions in, or unconventional, vent pipe designs which can amplify the above situations, extended operation of unvented fuel-burning devices (range, oven, fireplace, etc.), temperature inversions which can trap exhaust gases near the ground, car idling in an open or closed attached garage, or near a home.

CO Safety Tips

Every year, have the heating system, vents, chimney and flue inspected and cleaned by a qualified technician. Always install appliances according to manufacturer's instructions and adhere to local building codes. Most appliances should be installed by professionals and inspected after installation. Regularly examine vents and chimneys for improper connections, visible rust, or stains, and check for cracks in furnace heat exchangers. Verify that the color of flame is blue on pilot lights and burners. An amber or orange flame is a sign that the fuel is not burning completely and may be releasing CO. Teach all household members what the alarm sounds like and how

to respond. Fire Departments, most utility companies and HVAC contractors will perform CO inspections. Some contractors may charge for this service. It's advisable to inquire about any applicable fees prior to having the service performed. Kidde will not pay for, or reimburse the owner or user of this product, for any repair or dispatch calls related to the alarm sounding.

Symptoms of CO Poisoning

Initial carbon monoxide poisoning symptoms are similar to the flu with no fever and can include dizziness, severe headaches, nausea, vomiting and disorientation. Everyone is susceptible but experts agree that unborn babies, pregnant women, senior citizens and people with heart or respiratory problems are especially vulnerable. If symptoms of carbon monoxide poisoning are experienced seek medical attention immediately. CO poisoning can be determined by a carboxyhemoglobin test.

The following symptoms are related to CARBON MONOXIDE POISONING and should be discussed with ALL members of the household:

1. **MILD EXPOSURE:** Slight headache, nausea, vomiting, fatigue (often described as "Flu-like" symptoms).

2. **MEDIUM EXPOSURE:** Severe throbbing headache, drowsiness, confusion, fast heart rate.

3. **EXTREME EXPOSURE:** Unconsciousness, convulsions, cardio respiratory failure and death.

The above levels of exposure relate to healthy adults. Levels differ for those at high risk. Exposure to high levels of carbon monoxide can be fatal or cause permanent damage and disabilities. Many cases of reported carbon monoxide poisoning indicate that while victims are aware they are not feeling well, they become so disoriented they are unable to save themselves by either exiting the building, or calling for assistance. Also, young children and household pets may be the first affected. Familiarization with the effects of each level is important.

---

17. Cleaning Your Alarm

Your Alarm Should be Cleaned at Least Once a Year

You can clean the interior of your alarm (sensing chamber) by using compressed air or a vacuum cleaner hose and blowing or vacuuming through the openings around the perimeter of the alarm. The outside of the alarm can be wiped with a clean, dry cloth. Do not use water, detergents or cleaners as they may damage the alarm.

NOTE: Do not insert fingers or cleaning items under the shield during cleaning.

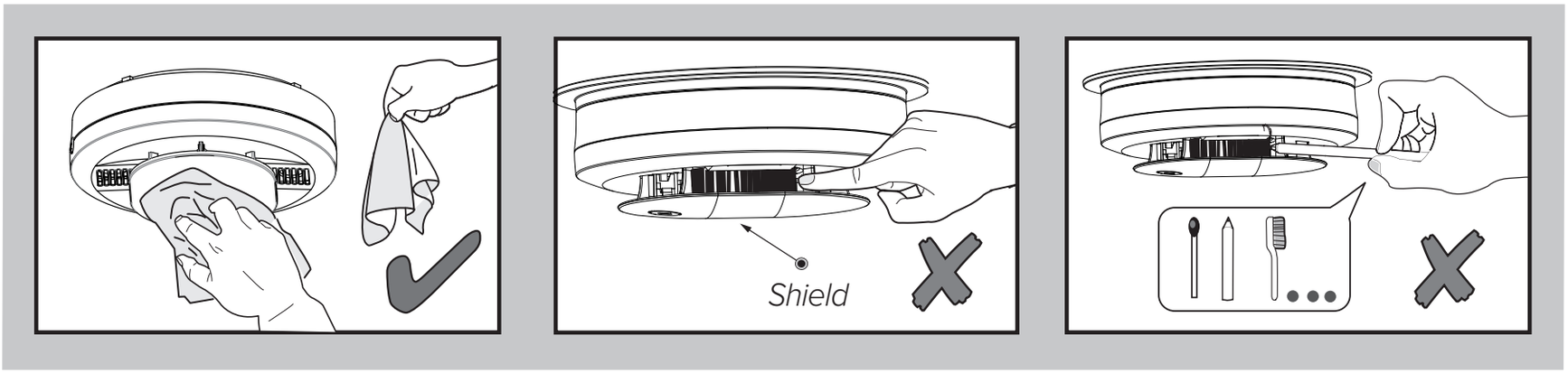

Figure 17

If the alarm is in Fault mode, the alarm may be in need of cleaning. After cleaning, press the Test/Hush button. If the fault does not clear, the alarm needs to be replaced.

- Never use detergent or other solvents to clean the unit.
- Avoid spraying air freshener, hair spray, or other aerosols near the alarm.
- Do not use a hair dryer to clean the alarm, as it may damage the alarm and impact performance.
- Do not paint the unit. Paint will seal the vents and interfere with the sensor's ability to detect smoke (smoke only models) or smoke and CO (combination smoke/CO models).
- Never attempt to disassemble the unit to clean inside. This action will void your warranty.

For combination smoke/CO models:

The following substances can affect the CO sensor and may cause false readings and damage to the sensor: Methane, propane, isobutane, iso-propanol, ethyl acetate, hydrogen sulfide, sulfide dioxides, alcohol based products, paints, thinner, solvents, adhesives, hair spray, aftershave, perfume, and some cleaning agents. Move the Alarm and place in another location prior to performing any of the following:

Staining or stripping wood floors or furniture
Painting
Wall papering
Using adhesives

Storing the unit in a plastic bag during any of the above projects will protect the sensors from damage. When household cleaning supplies or similar contaminates are used, the area must be well ventilated.

⚠ **WARNING: REINSTALL THE ALARM AS SOON AS POSSIBLE TO ENSURE CONTINUOUS DETECTION.**

18. Good Safety Habits

Develop and Practice a Plan of Escape

Prepare and practice a home escape plan twice a year, including drills at night. Know two ways out of every room (door & window) and identify a meeting place outside the home where everyone will gather once they have exited the residence. When two people have reached the meeting place, one should leave to call 911 while the second person stays to account for additional family members. Establish a rule that once you're out, you never re-enter under any circumstance!

- Make a floor plan indicating all doors and windows and at least two (2) escape routes from each room. Stories above ground level may need a rope or chain ladder.
- Have a family meeting and discuss your escape plan, showing everyone what to do in case of fire and where to meet after they leave the house.
- Ensure that small children hear the alarm and wake when it sounds. They must wake up in order to execute the escape plan. Practice allows all occupants to test your plan before an emergency. You may not be able to reach your children. It is important they know what to do.
- Familiarize everyone with the sounds of the smoke/CO alarm and train them to leave your home when they hear it.
- Current studies have shown smoke/CO alarms may not awaken all sleeping individuals, and that it is the responsibility of individuals in the household that are capable of assisting others to provide assistance to those who may not be awakened by the alarm sound, or to those who may be incapable of safely evacuating the area unassisted.
- Install and maintain fire extinguishers on every level of the home and in the kitchen, basement and garage. Know how to use a fire extinguisher prior to an emergency.

Fire Prevention

Never smoke in bed or leave cooking food unattended. Teach children never to play with matches or lighters! Train everyone in the home to recognize the smoke alarm pattern and to leave the home using their escape plan when it's heard. Know how to do "Stop, Drop and Roll" if clothes catch on fire, and how to crawl low under smoke. Install and maintain fire extinguishers on every level of the home and in the kitchen, basement and garage.

NFPA (National Fire Protection Association)

Fire Safety in the Home: NFPA 72 is intended to provide reasonable safety for persons in family living units. Reasonable fire safety can be produced through the following three-point program: (1) Minimizing fire hazards (2) Providing fire-warning equipment (3) Having and practicing an escape plan.

Smoke Detection – Are More Alarms Desirable?

The required number of smoke alarms might not provide reliable early warning protection for those areas separated by a door from the areas protected by the required smoke alarms. For this reason, it is recommended that the resident consider the use of additional smoke alarms for those areas for increased protection. The additional areas include the basement, bedrooms, dining room, furnace room, utility room, and hallways not protected by the required smoke alarms. The installation of smoke alarms in attics (finished or unfinished), garages, or within 6 ft (1.8m) of a heating or cooking appliance is not normally recommended, as these locations occasionally experience conditions that can result in improper operation. *

For your information, the National Fire Protection Association's Standard 72 reads: Where required by other governing laws, codes, or standards for a specific type of occupancy, approved single and multiple-station smoke alarms shall be installed as follows:

1. In all sleeping rooms and guest rooms
2. Outside of each separate dwelling unit sleeping area, within 21 ft (6.4 m) of any door to a sleeping room, with the distance measured along a path of travel
3. On every level of a dwelling unit, including basements
4. On every level of a residential board and care occupancy (small facility), including basements and excluding crawl spaces and unfinished attics
5. In the living area(s) of a guest suite
6. In the living area(s) of a residential board and care occupancy (small facility)

* Reference National Fire Protection Association (NFPA) standard 72

California State Fire Marshal

Early warning fire detection is best achieved by the installation of fire detection equipment in all rooms and areas of the household as follows: A smoke alarm installed in each separate sleeping area (in the vicinity, but outside the bedrooms), heat or smoke detectors in the living rooms, dining rooms, bedrooms, kitchens, hallways, attics, furnace rooms, closets, utility and storage rooms, basements and attached garages.

FCC

Contains FCC ID SAK-ESP32S3
Model RGSAR-RW: FCC ID: SAK-RGSARRW
Model RGCUAR-RW: FCC ID: SAK-RGCUARRW

This device complies with part 15 of the FCC Rules. Operation is subject to the following two conditions: (1) This device may not cause harmful interference, and (2) this device must accept any interference received, including interference that may cause undesired operation.

⚠ **CAUTION:** The user is cautioned that changes or modifications not expressly approved by the party responsible for compliance could void the user's authority to operate the equipment.

NOTE: This equipment has been tested and found to comply with the limits for a Class B digital device, pursuant to part 15 of the FCC Rules. These limits are designed to provide reasonable protection against harmful interference in a residential installation. This equipment generates, uses, and can radiate radio frequency energy and, if not installed and used in accordance with the instructions, may cause harmful interference to radio communications. However, there is no guarantee that interference will not occur in a particular installation. If this equipment does cause harmful interference to radio or television reception, which can be determined by turning the equipment off and on, the user is encouraged to try to correct the interference by one or more of the following measures:

- Reorient or relocate the receiving antenna.
- Increase the separation between the equipment and receiver.
- Connect the equipment into an outlet on a circuit different from that to which the receiver is connected.
- Consult the dealer or an experienced radio/TV technician for help.

FCC Radiation Exposure Statement:

This equipment complies with FCC radiation exposure limits set forth for an uncontrolled environment. This equipment should be installed and operated with a minimum distance of 20cm between the radiator and your body. This transmitter must not be co-located or operating in conjunction with any other antenna or transmitter.

19. Service And Warranty

Ten-Year Limited Warranty

Kidde warrants that the enclosed alarm (but not the batteries) will be free from defects in material and workmanship or design under normal use and service for a period of ten years from the date of purchase. The obligation of Kidde under this warranty is limited to repairing or replacing the alarm or any part which we find to be defective in material, workmanship or design (part replacement only, no installation), free of charge, upon receiving the alarm with proof of date of purchase, postage and return postage prepaid, to Warranty Service Department, Kidde, 1016 Corporate Park Drive, Mebane, NC 27302. Before shipping the product, please remove the batteries from the battery compartment.

This warranty shall not apply to the alarm if it has been damaged, modified, abused or altered after the date of purchase or if it fails to operate due to improper maintenance or inadequate power. Any implied warranties arising out of this sale, including but not limited to the implied warranties of description, merchantability and fitness for a particular purpose, are limited in duration to the above warranty period. In no event shall the Manufacturer be liable for loss of use of this product or for any indirect, special, incidental or consequential damages, or costs, or expenses incurred by the consumer or any other user of this product, whether due to a breach of contract, negligence, strict liability in tort or otherwise.

The Manufacturer shall have no liability for any personal injury, property damage or any special, incidental, contingent or consequential damage of any kind resulting from gas leakage, smoke, fire or explosion. Since some states do not allow limitations of the duration of an implied warranty or do not allow the exclusion or limitation of incidental or consequential damages, the above limitations or exclusions may not apply to you. While this warranty gives you specific legal rights, you may also have other rights which vary from state to state.

The above warranty may not be altered except in writing signed by both parties hereto. Your Kidde Alarm is not a substitute for property, fire, disability, life or other insurance of any kind. Appropriate insurance coverage is your responsibility. Consult your insurance agent. Opening the unit will void the warranty. If there are any differences between this printed warranty and the online limited warranty, then the terms of the online warranty supersede those in this user guide or other printed materials. Visit www.kidde.com for the latest warranty statement.

QUESTIONS OR FOR MORE INFORMATION

For Ring app or Ring connectivity questions, visit website
https://ring.com/support/contact-us

For all other questions, call Kidde Product Support:
1-877-542-5471 or contact us at www.kidde.com

Kidde

1016 Corporate Park Drive, Mebane, NC 27302

©2024 Kidde. All Rights Reserved.

Get Alerts in the Ring App

Wi-Fi

Smoke: Conforms to UL 217.
Combination Smoke/CO:
Conforms to Standards UL 217
and UL 2034.