EMISSIONS TEST REPORT FOR A LOW POWER TRANSMITTER

I. GENERAL INFORMATION

Requirement:	Federal Communications Commissions Class 2 permissive change
Test Requirements:	15.205, 15.207, 15.209, 15.247
Applicant:	RapidWave Networks 6296A San Ignacio Ave. San Jose CA 95119
Product ID:	FCC ID: SAMWIRL54BR1 Original Grant dated: 24 June 2004

II. DESCRIPTION OF EQUIPMENT UNDER TEST (EUT)

The RapidWave RL 54 is a high speed wireless bridge.

RF Specifications

RF Frequency Band	5745-5825 MHz
RF Signal Bandwidth	16.5 MHz Standard (99%BW) 33.5 MHz Turbo (99% BW)
Transmitter Output Power	+23.6 dBm peak maximum 16.11 dBm average maximum
Antennas	See table page 3 below

Model Designations

<u>Base Stations with Sector Antennas</u>
RL 54-BS-1660 - 60 deg sector antennas
RL 54-BS-1790 – 90 deg sector antennas

<u>CPE or Subscriber Units</u>
RL 54-SU-22 – 22 dBi panel antenna
RL 54-SU-23 – 23 dBi panel antenna
RL 54-SU-26 - 26 dBi panel antenna
RL 54-SU-28 – 28 dBi panel antenna

III. TEST LOCATION

All emissions tests were performed at:

Compliance Certification Services
571F Monterey Road
Morgan Hill, CA 95037

T.N. Cokenias 22 March 2005
EMC Consultant/Agent for Aperto Networks Inc.

TEST PROCEDURES

Measurement Equipment Used:

Agilent E4446A spectrum analyzer
EMCO 3115 Horn antenna, 1-18 GHz
ARA MWH-1826/B Horn antenna, 18 - 26 GHz
ARA MWH-2640/B Horn antenna, 26 - 40 GHz
Miteq NSP2600-SP preamplifier, 1 - 26 GHz
Miteq NSP4000-SP preamplifier, 26 - 40 GHz
Low loss coaxial cables

Radiated Emissions Above 1 GHz
Test Requirement: 15.109, 15.205, 15.209, 15.247

Test Set-Up

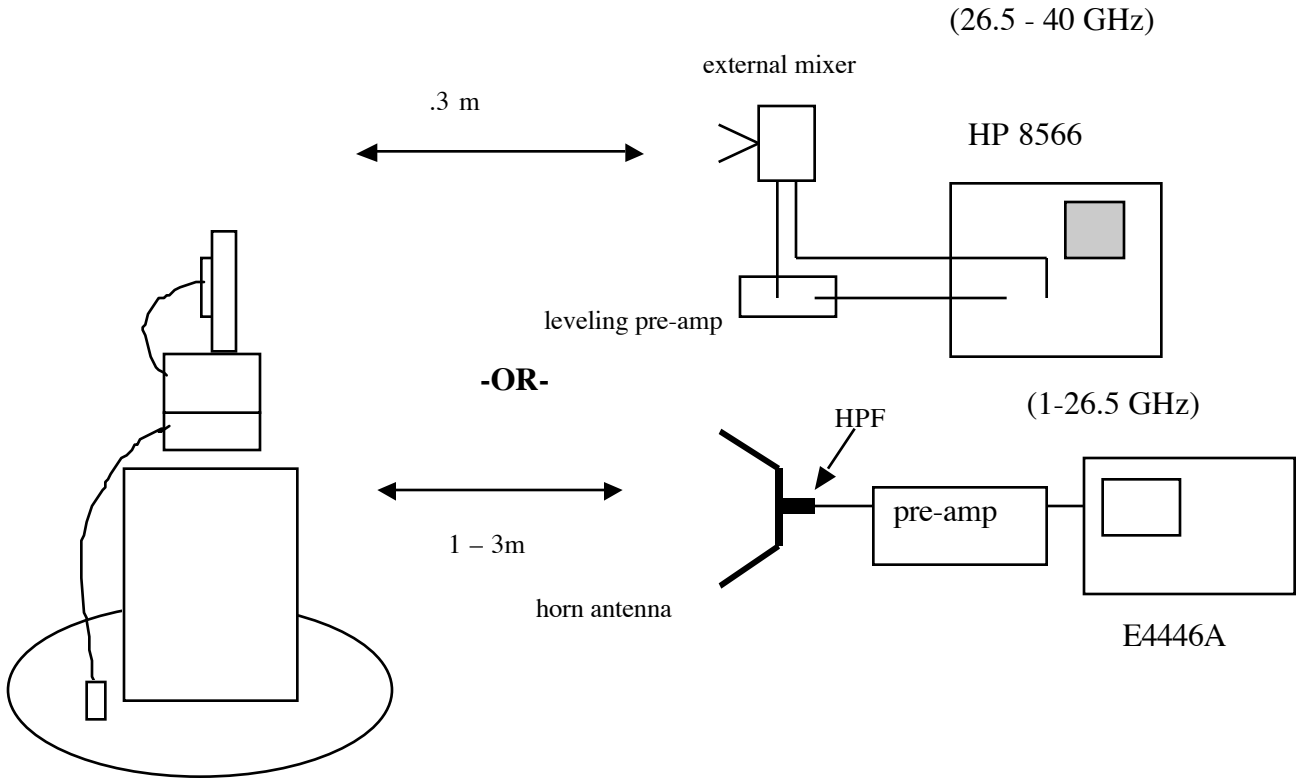

2. The turntable was slowly rotated to locate the direction of maximum emission at each emission falling in the restricted bands of 15.205.

3. Radiated emissions were investigated for a LOW channel, a MID channel, and HIGH channel. Emissions were investigated to the 10th harmonic. (Note: preliminary testing at 10 cm separation indicated no emissions from EUT in 26-40 GHz range).

4. Once maximum direction was determined, the search antenna was raised and lowered in both vertical and horizontal polarizations. The maximum readings so obtained are recorded in the data listed below.

Channel	**Frequency, MHz**
Low	5745
Mid	5785
High	5825

Radiated emissions were performed at each frequency for 6 different transmitter antennas.

Antennas tested:

Antenna Type	**Deployment**	**Gain**	**Antenna Mfr.**	**Model**
Panel antenna	Point to Point	28 dBi	Mti	MT-2004
60 deg. Sector	Point to Multipoint	17 dBi	Mars antenna	MA-WC50-5X
60 deg sector	Point to Multipoint	17 dBi	Mti	MT-484033/NV
90 deg. Sector	Point to Mulitpoint	16 dBi	Mars Antenna	MA-WD50-6X
90 deg. Sedctor	Point to Multipoint	17 dBi	Hi Gain	HG5817P-090
90 deg sector	Point to Multipoint	17 dBi	Mti	MT-484032/NV

Test Results: Worst case results are presented. Refer to attached spread sheets.

03/15/05 **High Frequency Measurement**

Compliance Certification Services, Morgan Hill Open Field Site

Test Engr: Thanh Nguyen
Project #: 05U3337-1
Company: RAPID WAVE
EUT Descrip.: 802.11a HIGH RATE POINT TO POINT WIRELESS BRIDGE w/ 28dBi PANEL Antenna MT-2004
EUT M/N: RAPIDLINK 54_17dBi_18dBm POWER OUTPUT
Test Target: FCC15.247
Mode Oper: TX LOW / MID / HI CHANNELS

Test Equipment:

EMCO Horn 1-18GHz	Pre-amplifer 1-26GHz	Pre-amplifer 26-40GHz	Horn > 18GHz
T73; S/N: 6717 @3m Hi Frequency Cables	T86 Miteq 924341		

2 foot cable	3 foot cable	4 foot cable	12 foot cable	HPF	Reject Filter
2_Thanh			12_Thanh	HPF_7.6GHz	

Peak Measurements
RBW=VBW=1MHz

Average Measurements
RBW=1MHz ; VBW=10Hz

f GHz	Dist (m)	Read Pk dBuV	Read Avg. dBuV	AF dB/m	CL dB	Amp dB	D Corr dB	Fltr dB	Peak dBuV/m	Avg dBuV/m	Pk Lim dBuV/m	Avg Lim dBuV/m	Pk Mar dB	Avg Mar dB	Notes (V/H)
Tx Low channel 5.745GHz															
11.490	3.0	55.3	41.6	38.3	5.5	-43.7	0.0	0.7	56.1	42.4	74	54	-17.9	-11.6	V
17.232	3.0	52.3	40.5	42.7	6.9	-45.9	0.0	0.6	56.7	44.9	74	54	-17.3	-9.1	V
11.490	3.0	49.4	37.8	38.3	5.5	-43.7	0.0	0.7	50.2	38.6	74	54	-23.8	-15.4	H
17.235	3.0	53.1	40.2	42.7	6.9	-45.9	0.0	0.6	57.5	44.6	74	54	-16.5	-9.4	H
No other harmonic and spurious emissions above 3rd Harmonic.															
Tx MID Channel 5.785GHz															
11.570	3.0	58.6	46.6	38.3	5.5	-43.7	0.0	0.7	59.4	47.4	74	54	-14.6	-6.6	H
17.355	3.0	50.1	40.1	43.4	6.9	-45.8	0.0	0.6	55.3	45.3	74	54	-18.7	-8.7	H
11.570	3.0	58.6	46.6	38.3	5.5	-43.7	0.0	0.7	59.4	47.4	74	54	-14.6	-6.6	V
17.355	3.0	53.0	41.4	43.4	6.9	-45.8	0.0	0.6	58.2	46.6	74	54	-15.8	-7.4	V
No other harmonic and spurious emissions above 3rd Harmonic.															
Tx High Channel 5.825GHz															
11.650	3.0	60.8	48.8	38.4	5.5	-43.7	0.0	0.7	61.6	49.7	74	54	-12.4	-4.3	V
17.475	3.0	52.6	41.2	44.1	7.0	-45.8	0.0	0.6	58.5	47.1	74	54	-15.5	-6.9	V
11.650	3.0	54.6	43.6	38.4	5.5	-43.7	0.0	0.7	55.5	44.5	74	54	-18.5	-9.5	H
17.475	3.0	53.1	41.0	44.1	7.0	-45.8	0.0	0.6	59.0	46.9	74	54	-15.0	-7.1	H
No other harmonic and spurious emissions above 3rd Harmonic.															
TX TURBO Mode															
5760MHz															
11.520	3.0	50.0	40.2	38.3	5.5	-43.7	0.0	0.7	50.8	41.0	74	54	-23.2	-13.0	H
17.280	3.0	53.9	43.6	43.0	6.9	-45.9	0.0	0.6	58.6	48.3	74	54	-15.4	-5.7	H
11.520	3.0	49.6	40.1	38.3	5.5	-43.7	0.0	0.7	50.4	40.9	74	54	-23.6	-13.1	V
17.280	3.0	53.5	40.5	43.0	6.9	-45.9	0.0	0.6	58.2	45.2	74	54	-15.8	-8.8	V
No other harmonic and spurious emissions above 3rd Harmonic.															

f	Measurement Frequency	Amp	Preamp Gain	Avg Lim	Average Field Strength Limit
Dist	Distance to Antenna	D Corr	Distance Correct to 3 meters	Pk Lim	Peak Field Strength Limit
Read	Analyzer Reading	Avg	Average Field Strength @ 3 m	Avg Mar	Margin vs. Average Limit
AF	Antenna Factor	Peak	Calculated Peak Field Strength	Pk Mar	Margin vs. Peak Limit
CL	Cable Loss	HPF	High Pass Filter		

03/15/05 **High Frequency Measurement**

Compliance Certification Services, Morgan Hill Open Field Site

Test Engr: Thanh Nguyen
Project #: 05U3337-1
Company: RAPID WAVE
EUT Descrip.: 802.11a HIGH RATE POINT TO MULTIPOINT WIRELESS BRIDGE w/90 deg sector Antenna MT-484032/NV
EUT M/N: RAPIDLINK 54_17dBi_18dBm POWER OUTPUT
Test Target: FCC15.247
Mode Oper: TX LOW / MID / HI CHANNELS

Test Equipment:

EMCO Horn 1-18GHz	Pre-amplifer 1-26GHz	Pre-amplifer 26-40GHz	Horn > 18GHz
T73; S/N: 6717 @3m	T86 Miteq 924341		

Hi Frequency Cables

2 foot cable	3 foot cable	4 foot cable	12 foot cable	HPF	Reject Filter
2_Thanh			12_Thanh	HPF_7.6GHz	

Peak Measurements
RBW=VBW=1MHz

Average Measurements
RBW=1MHz ; VBW=10Hz

f GHz	Dist (m)	Read Pk dBuV	Read Avg. dBuV	AF dB/m	CL dB	Amp dB	D Corr dB	Fltr dB	Peak dBuV/m	Avg dBuV/m	Pk Lim dBuV/m	Avg Lim dBuV/m	Pk Mar dB	Avg Mar dB	Notes (V/H)
Tx Low channel 5.745GHz															
11.490	3.0	57.7	45.7	38.3	5.5	-43.7	0.0	0.7	58.5	46.5	74	54	-15.5	-7.5	V
17.232	3.0	54.7	40.5	42.7	6.9	-45.9	0.0	0.6	59.1	44.9	74	54	-14.9	-9.1	V
11.490	3.0	51.7	40.0	38.3	5.5	-43.7	0.0	0.7	52.5	40.8	74	54	-21.5	-13.2	H
17.235	3.0	54.0	41.2	42.7	6.9	-45.9	0.0	0.6	58.4	45.6	74	54	-15.6	-8.4	H
No other harmonic and spurious emissions above 3rd Harmonic.															
Tx MID Channel 5.785GHz															
11.570	3.0	52.3	38.4	38.3	5.5	-43.7	0.0	0.7	53.1	39.3	74	54	-20.9	-14.7	H
17.355	3.0	53.9	40.5	43.4	6.9	-45.8	0.0	0.6	59.1	45.7	74	54	-14.9	-8.3	H
11.570	3.0	59.6	48.0	38.3	5.5	-43.7	0.0	0.7	60.4	48.9	74	54	-13.6	-5.1	V
17.355	3.0	52.8	40.1	43.4	6.9	-45.8	0.0	0.6	58.0	45.2	74	54	-16.0	-8.8	V
No other harmonic and spurious emissions above 3rd Harmonic.															
Tx High Channel 5.825GHz															
11.650	3.0	62.4	49.9	38.4	5.5	-43.7	0.0	0.7	63.3	50.8	74	54	-10.7	-3.2	V
17.475	3.0	52.9	40.1	44.1	7.0	-45.8	0.0	0.6	58.7	46.0	74	54	-15.3	-8.0	V
11.650	3.0	54.1	44.1	38.4	5.5	-43.7	0.0	0.7	55.0	45.0	74	54	-19.0	-9.0	H
17.475	3.0	52.1	40.1	44.1	7.0	-45.8	0.0	0.6	58.0	46.0	74	54	-16.0	-8.0	H
No other harmonic and spurious emissions above 3rd Harmonic.															
TX TURBO Mode															
5760MHz															
11.520	3.0	52.3	44.2	38.3	5.5	-43.7	0.0	0.7	53.1	45.0	74	54	-20.9	-9.0	H
17.280	3.0	53.6	42.2	43.0	6.9	-45.9	0.0	0.6	58.3	46.9	74	54	-15.7	-7.1	H
11.520	3.0	52.8	43.2	38.3	5.5	-43.7	0.0	0.7	53.6	44.0	74	54	-20.4	-10.0	V
17.280	3.0	53.4	40.3	43.0	6.9	-45.9	0.0	0.6	58.1	45.0	74	54	-15.9	-9.0	V
No other harmonic and spurious emissions above 3rd Harmonic.															

f	Measurement Frequency	Amp	Preamp Gain	Avg Lim	Average Field Strength Limit
Dist	Distance to Antenna	D Corr	Distance Correct to 3 meters	Pk Lim	Peak Field Strength Limit
Read	Analyzer Reading	Avg	Average Field Strength @ 3 m	Avg Mar	Margin vs. Average Limit
AF	Antenna Factor	Peak	Calculated Peak Field Strength	Pk Mar	Margin vs. Peak Limit
CL	Cable Loss	HPF	High Pass Filter		

03/15/05 **High Frequency Measurement**

Compliance Certification Services, Morgan Hill Open Field Site

Test Engr: Thanh Nguyen
Project #: 05U3337-1
Company: RAPID WAVE
EUT Descrip.: 802.11a HIGH RATE POINT TO MULTIPOINT WIRELESS BRIDGE w/ 60 deg Sector Antenna MT-484033
EUT M/N: RAPIDLINK 54_17dBi_18dBm POWER OUTPUT
Test Target: FCC15.247
Mode Oper: TX LOW / MID / HI CHANNELS

Test Equipment:

EMCO Horn 1-18GHz	Pre-amplifer 1-26GHz	Pre-amplifer 26-40GHz	Horn > 18GHz
T73; S/N: 6717 @3m Hi Frequency Cables	T86 Miteq 924341		

2 foot cable	3 foot cable	4 foot cable	12 foot cable	HPF	Reject Filter
2_Thanh			12_Thanh	HPF_7.6GHz	

Peak Measurements
RBW=VBW=1MHz

Average Measurements
RBW=1MHz ; VBW=10Hz

f GHz	Dist (m)	Read Pk dBuV	Read Avg. dBuV	AF dB/m	CL dB	Amp dB	D Corr dB	Fltr dB	Peak dBuV/m	Avg dBuV/m	Pk Lim dBuV/m	Avg Lim dBuV/m	Pk Mar dB	Avg Mar dB	Notes (V/H)
Tx Low channel 5.745GHz															
11.490	3.0	56.2	44.3	38.3	5.5	-43.7	0.0	0.7	57.0	45.1	74	54	-17.0	-8.9	V
17.232	3.0	53.4	40.3	42.7	6.9	-45.9	0.0	0.6	57.8	44.7	74	54	-16.2	-9.3	V
11.490	3.0	54.3	38.6	38.3	5.5	-43.7	0.0	0.7	55.1	39.4	74	54	-18.9	-14.6	H
17.235	3.0	55.3	44.8	42.7	6.9	-45.9	0.0	0.6	59.8	49.2	74	54	-14.2	-4.8	H
No other harmonic and spurious emissions above 3rd Harmonic.															
Tx MID Channel 5.785GHz															
11.570	3.0	59.6	45.9	38.3	5.5	-43.7	0.0	0.7	60.4	46.7	74	54	-13.6	-7.3	H
17.355	3.0	54.8	40.7	43.4	6.9	-45.8	0.0	0.6	60.0	45.9	74	54	-14.0	-8.1	H
11.570	3.0	59.2	45.5	38.3	5.5	-43.7	0.0	0.7	60.0	46.3	74	54	-14.0	-7.7	V
17.355	3.0	53.8	41.2	43.4	6.9	-45.8	0.0	0.6	59.0	46.4	74	54	-15.0	-7.6	V
No other harmonic and spurious emissions above 3rd Harmonic.															
Tx High Channel 5.825GHz															
11.650	3.0	57.5	44.0	38.4	5.5	-43.7	0.0	0.7	58.4	44.9	74	54	-15.6	-9.1	V
17.475	3.0	54.1	41.2	44.1	7.0	-45.8	0.0	0.6	60.0	47.1	74	54	-14.0	-6.9	V
11.650	3.0	58.3	44.9	38.4	5.5	-43.7	0.0	0.7	59.2	45.8	74	54	-14.8	-8.2	H
17.475	3.0	52.2	40.4	44.1	7.0	-45.8	0.0	0.6	58.1	46.3	74	54	-15.9	-7.7	H
No other harmonic and spurious emissions above 3rd Harmonic.															
TX TURBO Mode															
5760MHz															
11.520	3.0	56.9	45.2	38.3	5.5	-43.7	0.0	0.7	57.7	46.0	74	54	-16.3	-8.0	H
17.280	3.0	53.2	42.3	43.0	6.9	-45.9	0.0	0.6	57.9	47.0	74	54	-16.1	-7.0	H
11.520	3.0	58.6	46.3	38.3	5.5	-43.7	0.0	0.7	59.4	47.1	74	54	-14.6	-6.9	V
17.280	3.0	53.6	40.4	43.0	6.9	-45.9	0.0	0.6	58.3	45.1	74	54	-15.7	-8.9	V
No other harmonic and spurious emissions above 3rd Harmonic.															
															H
															H
															H
															H
															H
															H

f	Measurement Frequency	Amp	Preamp Gain	Avg Lim	Average Field Strength Limit
Dist	Distance to Antenna	D Corr	Distance Correct to 3 meters	Pk Lim	Peak Field Strength Limit
Read	Analyzer Reading	Avg	Average Field Strength @ 3 m	Avg Mar	Margin vs. Average Limit
AF	Antenna Factor	Peak	Calculated Peak Field Strength	Pk Mar	Margin vs. Peak Limit
CL	Cable Loss	HPF	High Pass Filter		

03/15/05 **High Frequency Measurement**

Compliance Certification Services, Morgan Hill Open Field Site

Test Engr: Thanh Nguyen
Project #: 05U3337-1
Company: RAPID WAVE
EUT Descrip.: 802.11a HIGH RATE POINT TO MULTIPOINT WIRELESS BRIDGE w/ 90 Degree PANEL Hi Gain HG5817P-090
EUT M/N: RAPIDLINK 54_15.5dBi_19dBm POWER OUTPUT
Test Target: FCC15.247
Mode Oper: TX LOW / MID / HI CHANNELS

Test Equipment:

EMCO Horn 1-18GHz	Pre-amplifer 1-26GHz	Pre-amplifer 26-40GHz	Horn > 18GHz
T73; S/N: 6717 @3m	T86 Miteq 924341		

Hi Frequency Cables

2 foot cable	3 foot cable	4 foot cable	12 foot cable	HPF	Reject Filter
2_Thanh			12_Thanh	HPF_7.6GHz	

Peak Measurements
RBW=VBW=1MHz

Average Measurements
RBW=1MHz ; VBW=10Hz

f GHz	Dist (m)	Read Pk dBuV	Read Avg. dBuV	AF dB/m	CL dB	Amp dB	D Corr dB	Fltr dB	Peak dBuV/m	Avg dBuV/m	Pk Lim dBuV/m	Avg Lim dBuV/m	Pk Mar dB	Avg Mar dB	Notes (V/H)
Tx Low channel 5.745GHz															
11.490	3.0	55.7	42.7	38.3	5.5	-43.7	0.0	0.7	56.5	43.4	74	54	-17.5	-10.6	V
17.232	3.0	55.1	40.5	42.7	6.9	-45.9	0.0	0.6	59.5	44.9	74	54	-14.5	-9.1	V
11.490	3.0	58.3	44.0	38.3	5.5	-43.7	0.0	0.7	59.1	44.8	74	54	-14.9	-9.2	H
17.235	3.0	55.2	41.0	42.7	6.9	-45.9	0.0	0.6	59.6	45.5	74	54	-14.4	-8.5	H
No other harmonic and spurious emissions above 3rd Harmonic.															
Tx MID Channel 5.785GHz															
11.570	3.0	59.0	44.6	38.3	5.5	-43.7	0.0	0.7	59.8	45.5	74	54	-14.2	-8.5	H
17.355	3.0	52.7	40.2	43.4	6.9	-45.8	0.0	0.6	57.9	45.4	74	54	-16.1	-8.6	H
11.570	3.0	61.9	48.1	38.3	5.5	-43.7	0.0	0.7	62.7	48.9	74	54	-11.3	-5.1	V
17.355	3.0	53.6	40.1	43.4	6.9	-45.8	0.0	0.6	58.8	45.3	74	54	-15.2	-8.7	V
No other harmonic and spurious emissions above 3rd Harmonic.															
Tx High Channel 5.825GHz															
11.650	3.0	59.0	45.3	38.4	5.5	-43.7	0.0	0.7	59.9	46.2	74	54	-14.1	-7.8	V
17.475	3.0	53.6	40.1	44.1	7.0	-45.8	0.0	0.6	59.5	46.0	74	54	-14.5	-8.0	V
11.650	3.0	55.7	44.1	38.4	5.5	-43.7	0.0	0.7	56.6	44.9	74	54	-17.4	-9.1	H
17.475	3.0	52.2	40.4	44.1	7.0	-45.8	0.0	0.6	58.1	46.3	74	54	-15.9	-7.7	H
No other harmonic and spurious emissions above 3rd Harmonic.															
TX TURBO Mode															
5760MHz															
11.520	3.0	58.3	46.6	38.3	5.5	-43.7	0.0	0.7	59.1	47.4	74	54	-14.9	-6.6	H
17.280	3.0	53.6	43.2	43.0	6.9	-45.9	0.0	0.6	58.3	47.9	74	54	-15.7	-6.1	H
11.520	3.0	58.5	45.7	38.3	5.5	-43.7	0.0	0.7	59.3	46.5	74	54	-14.7	-7.5	V
17.280	3.0	55.0	42.1	43.0	6.9	-45.9	0.0	0.6	59.7	46.8	74	54	-14.3	-7.2	V
No other harmonic and spurious emissions above 3rd Harmonic.															
															H
															H
															H
															H
															H
															H

f	Measurement Frequency	Amp	Preamp Gain	Avg Lim	Average Field Strength Limit
Dist	Distance to Antenna	D Corr	Distance Correct to 3 meters	Pk Lim	Peak Field Strength Limit
Read	Analyzer Reading	Avg	Average Field Strength @ 3 m	Avg Mar	Margin vs. Average Limit
AF	Antenna Factor	Peak	Calculated Peak Field Strength	Pk Mar	Margin vs. Peak Limit
CL	Cable Loss	HPF	High Pass Filter		

03/15/05 **High Frequency Measurement**

Compliance Certification Services, Morgan Hill Open Field Site

Test Engr: Thanh Nguyen
Project #: 05U3337-1
Company: RAPID WAVE
EUT Descrip.: 802.11a HIGH RATE POINT TO MULTIPOINT WIRELESS BRIDGE Mars Antenna MA-WD50-6X 90 deg sector
EUT M/N: RAPIDLINK 54_16dBi_19dBm POWER OUTPUT
Test Target: FCC15.247
Mode Oper: TX LOW / MID / HI CHANNELS

Test Equipment:

EMCO Horn 1-18GHz	Pre-amplifer 1-26GHz	Pre-amplifer 26-40GHz	Horn > 18GHz
T73; S/N: 6717 @3m Hi Frequency Cables	T86 Miteq 924341		

2 foot cable	3 foot cable	4 foot cable	12 foot cable	HPF	Reject Filter
2_Thanh			12_Thanh	HPF_7.6GHz	

Peak Measurements
RBW=VBW=1MHz

Average Measurements
RBW=1MHz ; VBW=10Hz

f GHz	Dist (m)	Read Pk dBuV	Read Avg. dBuV	AF dB/m	CL dB	Amp dB	D Corr dB	Fltr dB	Peak dBuV/m	Avg dBuV/m	Pk Lim dBuV/m	Avg Lim dBuV/m	Pk Mar dB	Avg Mar dB	Notes (V/H)
Tx Low channel 5.745GHz															
11.490	3.0	54.2	41.8	38.3	5.5	-43.7	0.0	0.7	54.9	42.6	74	54	-19.1	-11.4	V
17.232	3.0	53.8	40.3	42.7	6.9	-45.9	0.0	0.6	58.2	44.7	74	54	-15.8	-9.3	V
11.490	3.0	52.5	38.4	38.3	5.5	-43.7	0.0	0.7	53.3	39.2	74	54	-20.7	-14.8	H
17.235	3.0	53.4	40.1	42.7	6.9	-45.9	0.0	0.6	57.8	44.5	74	54	-16.2	-9.5	H
No other harmonic and spurious emissions above 3rd Harmonic.															
Tx MID Channel 5.785GHz															
11.570	3.0	56.4	43.9	38.3	5.5	-43.7	0.0	0.7	57.2	44.8	74	54	-16.8	-9.2	H
17.355	3.0	52.7	40.0	43.4	6.9	-45.8	0.0	0.6	57.8	45.1	74	54	-16.2	-8.9	H
11.570	3.0	58.9	44.7	38.3	5.5	-43.7	0.0	0.7	59.8	45.5	74	54	-14.2	-8.5	V
17.355	3.0	54.3	40.1	43.4	6.9	-45.8	0.0	0.6	59.4	45.3	74	54	-14.6	-8.7	V
No other harmonic and spurious emissions above 3rd Harmonic.															
Tx MID Channel 5.825GHz															
11.650	3.0	57.8	44.4	38.4	5.5	-43.7	0.0	0.7	58.7	45.3	74	54	-15.3	-8.7	V
17.475	3.0	52.9	40.0	44.1	7.0	-45.8	0.0	0.6	58.8	45.9	74	54	-15.2	-8.1	V
11.650	3.0	52.8	39.5	38.4	5.5	-43.7	0.0	0.7	53.7	40.4	74	54	-20.3	-13.6	H
17.475		52.8	41.4	44.1	7.0	-45.8	0.0	0.6	58.7	47.3	74	54	-15.3	-6.7	H
No other harmonic and spurious emissions above 3rd Harmonic.															
TX TURBO Mode															
5760MHz															
11.520	3.0	56.7	42.8	38.3	5.5	-43.7	0.0	0.7	57.5	43.6	74	54	-16.5	-10.4	H
17.280	3.0	54.5	40.0	43.0	6.9	-45.9	0.0	0.6	59.2	44.6	74	54	-14.8	-9.4	H
11.520	3.0	57.9	44.8	38.3	5.5	-43.7	0.0	0.7	58.7	45.6	74	54	-15.3	-8.4	V
17.280	3.0	53.1	40.1	43.0	6.9	-45.9	0.0	0.6	57.8	44.8	74	54	-16.2	-9.2	V
No other harmonic and spurious emissions above 3rd Harmonic.															
															H
															H
															H
															H
															H
															H

f	Measurement Frequency	Amp	Preamp Gain	Avg Lim	Average Field Strength Limit
Dist	Distance to Antenna	D Corr	Distance Correct to 3 meters	Pk Lim	Peak Field Strength Limit
Read	Analyzer Reading	Avg	Average Field Strength @ 3 m	Avg Mar	Margin vs. Average Limit
AF	Antenna Factor	Peak	Calculated Peak Field Strength	Pk Mar	Margin vs. Peak Limit
CL	Cable Loss	HPF	High Pass Filter		

03/15/05 **High Frequency Measurement**

Compliance Certification Services, Morgan Hill Open Field Site

Test Engr: Thanh Nguyen
Project #: 05U3337-1
Company: RAPID WAVE
EUT Descrip.: 802.11a HIGH RATE POINT TO MULTIPOINT WIRELESS BRIDGE w/ 60 Degree Sector Antenna Mars Antenna MAC50-5X
EUT M/N: RAPIDLINK 54_15.5dBi_19dBm POWER OUTPUT
Test Target: FCC15.247
Mode Oper: TX LOW / MID / HI CHANNELS

Test Equipment:

EMCO Horn 1-18GHz	Pre-amplifer 1-26GHz	Pre-amplifer 26-40GHz	Horn > 18GHz
T73; S/N: 6717 @3m Hi Frequency Cables	T86 Miteq 924341		

2 foot cable	3 foot cable	4 foot cable	12 foot cable	HPF	Reject Filter
2_Thanh			12_Thanh	HPF_7.6GHz	

Peak Measurements
RBW=VBW=1MHz

Average Measurements
RBW=1MHz ; VBW=10Hz

f GHz	Dist (m)	Read Pk dBuV	Read Avg. dBuV	AF dB/m	CL dB	Amp dB	D Corr dB	Fltr dB	Peak dBuV/m	Avg dBuV/m	Pk Lim dBuV/m	Avg Lim dBuV/m	Pk Mar dB	Avg Mar dB	Notes (V/H)
Tx Low channel 5.745GHz															
11.490	3.0	56.6	44.0	38.3	5.5	-43.7	0.0	0.7	57.4	44.8	74	54	-16.6	-9.2	V
17.232	3.0	53.0	40.2	42.7	6.9	-45.9	0.0	0.6	57.4	44.6	74	54	-16.6	-9.4	V
11.490	3.0	58.3	45.5	38.3	5.5	-43.7	0.0	0.7	59.1	46.3	74	54	-14.9	-7.7	H
17.235	3.0	53.5	40.2	42.7	6.9	-45.9	0.0	0.6	57.9	44.6	74	54	-16.1	-9.4	H
No other harmonic and spurious emissions above 3rd Harmonic.															
Tx MID Channel 5.785GHz															
11.570	3.0	56.8	45.1	38.3	5.5	-43.7	0.0	0.7	57.6	45.9	74	54	-16.4	-8.1	H
17.355	3.0	53.5	40.0	43.4	6.9	-45.8	0.0	0.6	58.7	45.1	74	54	-15.3	-8.9	H
11.570	3.0	59.2	46.3	38.3	5.5	-43.7	0.0	0.7	60.0	47.2	74	54	-14.0	-6.8	V
17.355	3.0	54.6	40.3	43.4	6.9	-45.8	0.0	0.6	59.8	45.5	74	54	-14.2	-8.5	V
No other harmonic and spurious emissions above 3rd Harmonic.															
Tx MID Channel 5.825GHz															
11.650	3.0	56.5	41.3	38.4	5.5	-43.7	0.0	0.7	57.4	42.2	74	54	-16.6	-11.8	V
17.475	3.0	52.8	40.2	44.1	7.0	-45.8	0.0	0.6	58.7	46.1	74	54	-15.3	-7.9	V
11.650	3.0	55.7	42.5	38.4	5.5	-43.7	0.0	0.7	56.6	43.3	74	54	-17.4	-10.7	H
17.475	3.0	52.5	40.6	44.1	7.0	-45.8	0.0	0.6	58.4	46.5	74	54	-15.6	-7.5	H
No other harmonic and spurious emissions above 3rd Harmonic.															
TX TURBO Mode															
5760MHz															
11.520	3.0	53.3	39.6	38.3	5.5	-43.7	0.0	0.7	54.0	40.4	74	54	-20.0	-13.6	H
17.280	3.0	53.6	39.8	43.0	6.9	-45.9	0.0	0.6	58.3	44.5	74	54	-15.7	-9.5	H
11.520	3.0	54.1	40.3	38.3	5.5	-43.7	0.0	0.7	54.9	41.1	74	54	-19.1	-12.9	V
17.280	3.0	54.4	39.7	43.0	6.9	-45.9	0.0	0.6	59.1	44.4	74	54	-14.9	-9.6	V
No other harmonic and spurious emissions above 3rd Harmonic.															
															H
															H
															H
															H
															H
															H

f	Measurement Frequency	Amp	Preamp Gain	Avg Lim	Average Field Strength Limit
Dist	Distance to Antenna	D Corr	Distance Correct to 3 meters	Pk Lim	Peak Field Strength Limit
Read	Analyzer Reading	Avg	Average Field Strength @ 3 m	Avg Mar	Margin vs. Average Limit
AF	Antenna Factor	Peak	Calculated Peak Field Strength	Pk Mar	Margin vs. Peak Limit
CL	Cable Loss	HPF	High Pass Filter		

RF Power Output
Test Requirement: 15.247(b)

Measurement Equipment Used:

Agilent E4416A power meter
Agilent E9327A RF sensor
20 dB attenuator

Test Procedures

1. The EUT was configured on a test bench. The power meter was zeroed and calibrated. The control software was activated and power was set to produce the same output power levels tested for the original application (power setting = 19).
2. The 20 dB attenuator was connected to the antenna port of the EUT. The power meter head was connected to the other end of the attenuator. Peak power was read directly off the meter, accounting for the 20 dB attenuator.

3. The process in (1) and (2) was repeated for MID channel and HIGH channel.

Test Results

Power level readings converted to dBm are shown below.

Channel	Frequency MHz	PEAK Power dBm	AVE Power dBm
LOW	5745	22.86	15.3
MID	5785	23.6	16.11
HIGH	5825	22.71	15.74

Maximum output power output variation within 0.1 dBm of original measurement.