USER INSTRUCTIONS

2.4GHz

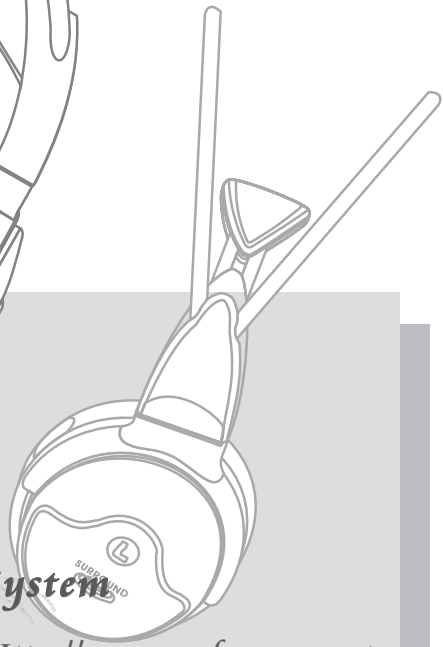

2.4GHz Digital Transmission Wireless Surround Headphone System

CP3D-WL-2.4G-A101

Http://www.professor.com.tw
E-mail:jack@professor.com.tw

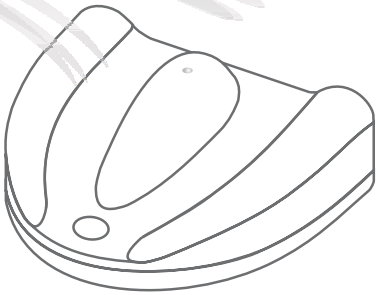

PROFESSOR

PROFESSOR TECHNOLOGY CO., LTD.

Dear customer:

Thank you very much for your purchasing our wireless headphone. The CP3D-WL-2.4G-A101 wireless headphone system consists of CP3D-2.4G-TX010 transmitter and CP3D-2.4G-RX011 headphones. Based on 2.4GHz RF digital transmission, CP3D-WL-2.4G-A101 wireless headphone system can deliver the vivid sound quality without any distortion, and make you freely enjoy your multi-media entertainment without any inconvenience of cord. In order to make an optimum use of your CP3D-WL-2.4G-A101, please take a few minutes to read this instruction below before using the equipment. Please also keep the manual for future reference.

Content Table

1. Description----------2

2. Precaution----------2

3. Unpacking----------2

4. Controls----------2

4.1 Headphones----------2

4.2 Transmitter----------3

5. Operating Notes----------3

5.1 Charging the Batteries----------3

5.2 Connecting the Transmitter to Your Audio Source ----------4

5.2.1 Connecting to a Headphone Output ----------4

5.2.2 Connecting to a LINE Output ----------4

5.3 Setting Up the System ----------4

5.4 POWER ON/ SIGNAL LED Status ----------5

5.4.1 Transmitter ----------5

5.4.2 Headphones ----------5

6. Specifications ----------5

7. Troubleshooting ----------6

8. Important Notes ----------7

9. Warranty Conditions ----------7

1. Description

The CP3D-WL-2.4G-A101 headphone system …

1. Allows you eliminate the hassle of wires and give you absolute freedom while maintaining vivid audio quality by transmitting the audio in a 2.4GHz RF digital format.
2. Provides a perfect 3D surrounding sound, digital clarity, mobility, and signal transmission in a distance of 20 meters or more under ideal interior transmission condition (free field).
3. Provides 8 selectable carrier frequencies to avoid the interference by other 2.4GHz RF devise, and while transmitter adjusted by the channel selector ("0" set up originally), an "Autotuning" function helps the headphones automatically tune to match the transmitter frequency.
4. Easily switches headphone to another audio output as you want by a transforming button.
5. Features a power saving and fuzzy use by "Mechanical-sensor" function that the headphone can switch the power on or off according to the work angle formed by earphone case and hook.
6. Easy to connect to any audio source, such as home entertainment Multi-media device, TV, car DVD, PC or notebook computer.
7. Provides easier arrangement for your satisfied volume by the electronic adjuster on headphone.

2. Precautions

1. Operate the headphone with two AAA size1.2V rechargeable batteries or powerful Alkaline batteries; operate the transmitter with AC/ DC adapter directly.
2. Before charging the batteries, please make sure that the batteries in the headphones are rechargeable type. As charging the batteries, the headphones will be shut down automatically and you cannot hear any sound.
3. Dispose of rechargeable battery confirming to local waste disposal rules. Never throw battery into fire.
4. If your headphones not in use, please never separate two headphone pieces in order to keep your headphone's power.
5. Never try to open the headphone and transmitter case. Refer serving to qualified service personnel only.
6. Never use alcohol, petroleum-based cleaners, or paint thinners to clean the headphone or transmitter.

3. Unpacking

Your headphones system package contains the following components.

- **One pair of Headphones (CP3D-2.4G -RX011)**
- **One Certified Transmitter (CP3D-2.4G -TX010)**
- **Two Connecting Cables** with gold plated connectors: 1 RCA signal cable, & 1 jack cable (1 ∅3.5mm mini plug-to-2 RCA connectors)
- **One Jack plug (mini jack-to-1/4")**
- **5V DC, 1A AC Adapter**
- **Two 1.2V AA size Rechargeable Batteries**
- **One Charging Cable** for charging the headphone via Transmitter

4. Controls

4.1 Headphones

- **Left: (Refer to F-1)**

1. Electronic volume adjuster

- **Right: (Refer to F-2)**

2. Power LED

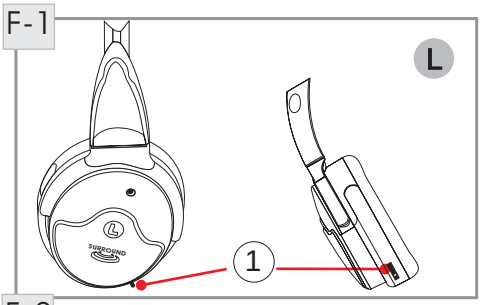

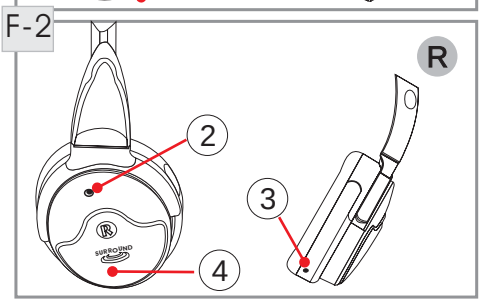

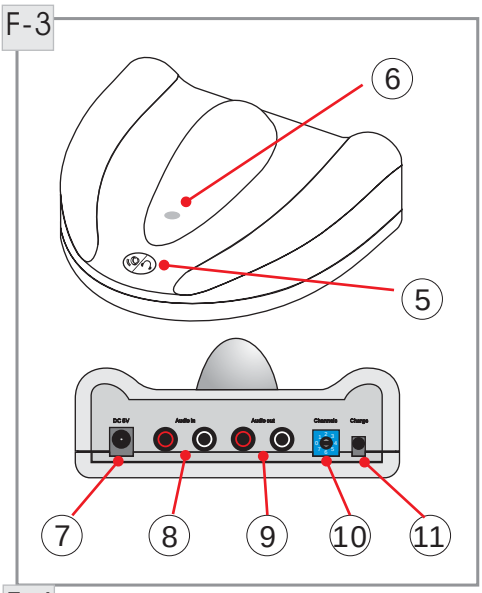

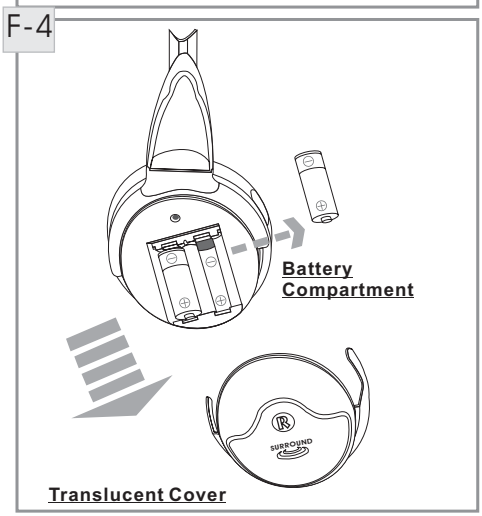

3. Charging connector
4. Battery compartment

4.2 Transmitter (Refer to F-3)

■ **Top Interface**

5. AUDIO headphone/spaeker Button
6. Power LED

■ **Rear Panel**

7. DC Power
8. AUDIO IN L/R
9. AUDIO OUT L/R
10. Channels selector
11. DC (Charge)

5. Operating Notes

5.1 Charging the Battery

1. In order to ensure the longest possible service life for the rechargeable battery, you will have to fully charge the supplied battery before first operating your headphones system.
2. While inserting the batteries, you will firstly press the translucent cover's two wings and pull it out, and then place the batteries inside the compartment as polarity mark **(Refer to F-4)**.
3. Plug the charging cable into the

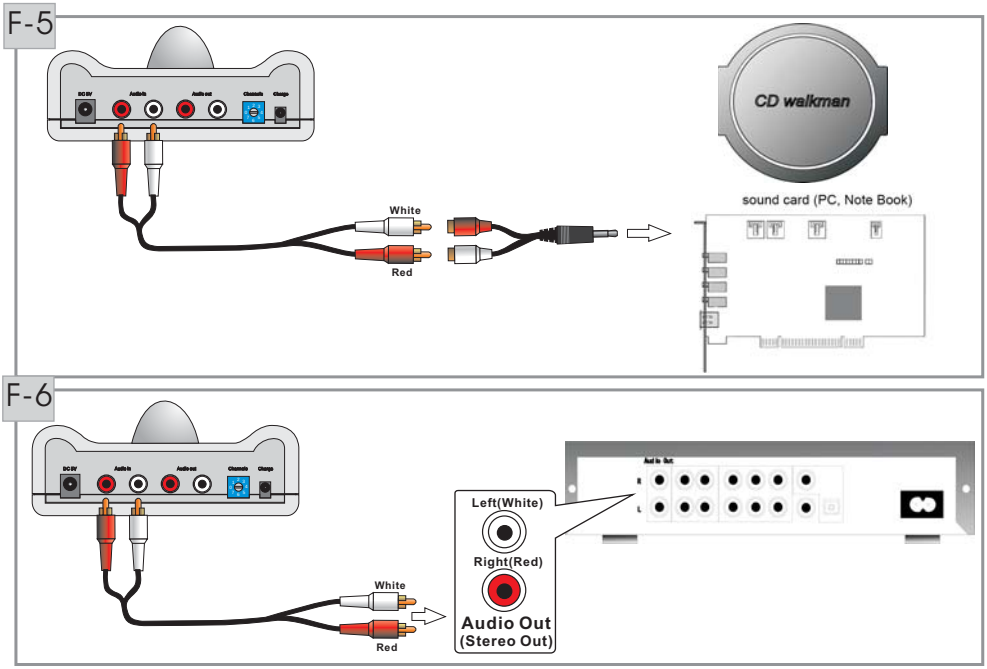

charging jack of headphone and connect to transmitter's DC jack.

4. If the transmitter connecting with electricity, the POWER LED will light on and the battery be being charged via charging cable.
5. By the charging system, the batteries will be fully charged for 8 ~ 10 hours.

5.2 Connecting the Transmitter to your Audio Source

5.2.1 Connecting to a Headphone Output (Refer to F-5)

1. Before connecting the transmitter to your audio source, please switch the audio device OFF.
2. Connect the stereo mini jack plug of the jack cable to the headphone output of your audio source. And consequently, plug the supplied connecting cables to jack cable.
3. Plug the red RCA connector (Right channel) on the supplied jack cable into the red AUDIO IN (R) socket and the white RCA connector (Left channel) on the supplied jack cable into the white AUDIO IN (L) socket on the transmitter's rear panel.

5.2.2 Connecting to a LINE Output (Stereo L/R) (Refer to F-6)

1. Before connecting the transmitter to your audio source, please switch the audio device OFF.
2. Use the supplied RCA cable to connect the white LINE OUT (L) jack on your audio source to the white AUDIO IN (L) jack on the transmitter rear panel and the red LINE OUT (R) jack on your audio source to the red AUDIO IN (R) jack.

5.3 Setting Up the System

1. If the transmitter connects to the electricity, the POWER LED will light on.

Please press the AUDIO IN/OUT button down as you would like to enjoy the audio by headphones.

2. Switch ON the audio source to which the transmitter is connected.
3. As carrying on the headphones, headphone's POWER LED will light on and start to work because the work angle formed by headphone case and hook is compressed and the headphone's power-switch is connected up. On the contrary, as two headphone pieces placed face-to-face, the power switch interrupt a connection and the headphones are always on the "OFF" condition.
4. If the audio signal presents on headphone's receiver input, the SIGNAL LED will light on; and then, you will listen to the minimal sound and please use electronic VOLUME control on left headphone case to adjust the best volume condition for you.
5. When hearing the noise or distortion, you can change your transmitter's channel for the best carrier frequency in order to eliminate the interference.
6. Additionally, as you want to switch to another alternative audio output, please press the button up.

IMPORTANT: ***For keeping your hearing, the volume is reset to minimal level when you turn off every time. As you carry on the headphones, you will re-enlarge the volume in order to listen well.***

5.4 POWER ON/ SIGNAL LED Status

5.4.1 Transmitter

If LED is…	Transmitter
…lighting on	…is connected to the electricity and automatically turns on; is connected to the headphones by charging cable and charging the batteries.
…no light	…isn't connected to the electricity and the adapter is switched off.

5.4.2 Headphones

If POWER LED (R) is…	Headphone
…lighting on	… is placed on your head and automatically turns on as the power-switch is connected up.
…no light	… is stored and automatically turns off.

6. Specifications

Normal Impedance	32Ω
Frequency Response	20 Hz ~ 20 KHz
Output Power	100 mW
Frequency Range	2400~2484 MHz
Channel	8 (Max.)
Sensitivity	115 dB

Signal-to-noise ratio	Type. 85dB
Transmit Distance	15~20 Meters
Power Supply (Transmitter)	5V DC, 1A AC Adapter
Power Supply (Headphone)	Two 1.2V AA size, Rechargeable/ NiMH Battery
Type	Dynamic, Close Air
Weight	Approx. 380 g (Headphones)

7. Troubleshooting

Symptom	Cause	Solution
No sound	1.AC adapter is not connected to transmitter and/ or AC outlet.	1.Connect AC adapter to transmitter and/ or AC outlet.
	2.Transmitter is not connected to audio source.	2.Connect transmitter to audio source.
	3.Audio is switched to other output instrument.	3.Press down Audio Out/ In button on transmitter.
	4.Connected audio source is switched off.	4.Switch audio source on to feed signal to transmitter input.
	5.Volume control on audio source is at zero.	5.Set audio source volume to desired level.
	6.Batteries are dead.	6.Charge batteries.
	7.Just carry on the headphones and volume is at minimal level.	7.Set VOLUME control on headphones to desired level.
POWER ON LED does not light	1.Transmitter is not connected to AC power.	1.Connect transmitter to AC power.
Loud noise or Distorted sound	1.Input signal is noisy.	1.Check audio source.
	2.Audio level at transmitter input is too high.	2.Decrease audio source volume.
	3.Carrier frequencies are interfered by other 2.4GHz RF device.	3.Use FREQ selector on transmitter to select different carrier frequency and headphone receiver will autotune to match.
	4.Using the headphones over effective transmission distance.	4.Come near the transmitter and into the effective distance.
	5.Batteries are low.	5.Charge batteries.

If you still got problem to use this system, please contact with the seller or call us to solve.

This manual and specifications subject to change without notice.

8. Important Notes

1. Operating switch on or connecting the transmitter to your audio source may cause clicks which at high volume settings to affect your hearing. Therefore, be sure to set the VOLUME control on your audio source to minimum before connecting the transmitter.

2. Listening over headphone at high volume level, particularly over extended periods of time, may damage your hearing.

3. Your CP3D-WL-2.4G-A101 headphone system is a RF device based on 2.4GHz transmission. In order to enjoy interference-free listening pleasure, please avoid operating your CP3D-WL-2.4G-A101 in the close vicinity of radio equipment, cellular phones, or other wireless device.

9. Warranty Conditions

PROFESSOR warrants PROFESOR products against evident defects in material and workmanship for a period of one year from the date of original purchasing for use. This Warranty does not cover damage resulting from misuse or abuse, or lack of reasonable care, or inadequate repairs performed by unauthorized service centers. Performance of repairs or replacements under this Warranty is subject to submission of the sales slip. Shipment of defective items for repair under this Warranty will be at the customer's own risk. This Warranty is valid for the original purchaser only.

FCC RF Explosure NOTE

This equipment has been tested and found to comply with the limits for a Class B digital device, pursuant to Part 15 of the FCC Rules. These limits are designed to provide reasonable protection against harmful interference in a residential installation. This equipment generates, uses and can radiated radio frequency energy and, if not installed and used in accordance with the instructions, may cause harmful interference to radio communications. However, there is no guarantee that interference will not occur in a particular installation If this equipment does cause harmful interference to radio or television reception, which can be determined by turning the equipment off and on, the user is encouraged to try to correct the interference by one or more of the following measures:

-Reorient or relocate the receiving antenna.
-Increase the separation between the equipment and receiver.
-Connect the equipment into an outlet on a circuit different from that to which the receiver is connected.
-Consult the dealer or an experienced radio/TV technician for help.

Changes or modifications not expressly approved by the party responsible for compliance could void the user‘s authority to operate the equipment.

This device and its antenna(s) must not be co-located or operating in conjunction with any other antenna or transmitter.

PROFESSOR TECHNOLOGY CO., LTD.
5F, No. 25-1, Jilin Rd., Chung-Li Industrial Park
Taoyuan 320, Taiwan R.O.C.