RADIO TEST REPORT
FCC ID: SBP-WALL

Product : Smart Wall Switch

Trade Mark : TBD

Model Name : PS01

Family Model : DS01, KP014

Report No. : S19101601506001

Prepared for

Smartlabs, Inc.

1621 Alton Parkway, Suite 100, Irvine, CA 92606, United States

Prepared by

Shenzhen NTEK Testing Technology Co., Ltd.

1/F, Building E, Fenda Science Park, Sanwei Community, Xixiang Street
Bao'an District, Shenzhen 518126 P.R. China
Tel.: +86-755-6115 6588 Fax.: +86-755-6115 6599
Website:http//www.ntek.org.cn

TEST RESULT CERTIFICATION

Applicant's name ..... : Smartlabs, Inc.

Address ..... : 1621 Alton Parkway, Suite 100, Irvine, CA 92606, United States

Manufacturer's Name ..... : Smartlabs, Inc.

Address ..... : 1621 Alton Parkway, Suite 100, Irvine, CA 92606, United States

Product description

Product name ..... : Smart Wall Switch

Model and/or type reference : PS01

Family Model DS01, KP014

Rating(s) ..... : 120~240VAC, 60Hz, 9Amps

Standards ..... : FCC Part15.249

Test procedure ..... ANSI C63.10-2013

This device described above has been tested by NTEK, and the test results show that the equipment under test (EUT) is in compliance with the FCC requirements. And it is applicable only to the tested sample identified in the report.

This report shall not be reproduced except in full, without the written approval of NTEK, this document may be altered or revised by NTEK, personnel only, and shall be noted in the revision of the document.

Date of Test .....:

Date (s) of performance of tests .....: 17 Oct. 2019 ~ 12 Nov. 2019

Date of Issue.....: 12 Nov. 2019

Test Result.....: **Pass**

Testing Engineer : Mary. Hu

(Mary Hu)

Technical Manager : Jason chen

(Jason Chen)

Authorized Signatory : Sam. Chen

(Sam Chen)

Table of Contents Page

1 . SUMMARY OF TEST RESULTS 4
1.1 TEST FACILITY 5
1.2 MEASUREMENT UNCERTAINTY 5
2 . GENERAL INFORMATION 6
2.1 GENERAL DESCRIPTION OF EUT 6
2.2 DESCRIPTION OF TEST MODES 8
2.3 BLOCK DIGRAM SHOWING THE CONFIGURATION OF SYSTEM TESTED 9
2.4 DESCRIPTION OF SUPPORT UNITS (CONDUCTED MODE) 10
2.5 EQUIPMENTS LIST FOR ALL TEST ITEMS 11
3 . ANTENNA REQUIREMENT 13
3.1 STANDARD REQUIREMENT 13
3.2 EUT ANTENNA 13
3.3 CONDUCTED EMISSION MEASUREMENT 14
3.3.1 POWER LINE CONDUCTED EMISSION LIMITS 14
3.3.2 TEST PROCEDURE 15
3.3.3 DEVIATION FROM TEST STANDARD 15
3.3.4 TEST SETUP 15
3.2.5 TEST RESULT 16
3.4 RADIATED EMISSION MEASUREMENT 20
3.4.1 RADIATED EMISSION LIMITS 20
3.4.2 TEST PROCEDURE 21
3.4.3 DEVIATION FROM TEST STANDARD 21
3.4.4 TEST RESULTS (BELOW 30MHZ) 23
3.4.5 TEST RESULTS (BELOW 1000 MHZ) 24
3.4.6 TEST RESULTS (ABOVE 1000 MHZ) 26
3.4.7 TEST RESULTS (RESTRICTED BANDS REQUIREMENTS) 28
4. BANDWIDTH TEST 30
4.1 TEST PROCEDURE 30
4.2DEVIATION FROM STANDARD 30
4.3TEST SETUP 30
4.4TEST RESULTS 31

1. SUMMARY OF TEST RESULTS

Test procedures according to the technical standards:

FCC Part15, Subpart C (15.249)			
Standard Section	Test Item	Judgment	Remark
15.207	Conducted Emission	Pass	
15.203	Antenna Requirement	Pass	
15.249 15.209	Radiated Spurious Emission	Pass	
15.249b(2)	Frequency Tolerance	N/A	
15.249(a)	Fundamental Measurement	Pass	
15.205	Band Edge Emission	Pass	
15.215	Occupied Bandwidth	Pass	

Note: “N/A” denotes test is not applicable in this Test Report.

1.1 TEST FACILITY

Shenzhen NTEK Testing Technology Co., Ltd
Add. : 1/F, Building E, Fenda Science Park, Sanwei Community, Xixiang Street, Bao'an District, Shenzhen 518126 P.R. China.
FCC FRN Registration No.:463705; IC Registration No.:9270A-1
CNAS Registration No.:L5516

1.2 MEASUREMENT UNCERTAINTY

The reported uncertainty of measurement **y ± U**，where expended uncertainty **U** is based on a standard uncertainty multiplied by a coverage factor of **k=2**，providing a level of confidence of approximately **95** %。

No.	Item	Uncertainty
1	Conducted Emission Test	±1.38dB
2	RF power,conducted	±0.16dB
3	Spurious emissions,conducted	±0.21dB
4	All emissions,radiated(<1G)	±4.68dB
5	All emissions,radiated(>1G)	±4.89dB
6	Temperature	±0.5°C
7	Humidity	±2%

2. GENERAL INFORMATION

2.1 GENERAL DESCRIPTION OF EUT

Equipment	Smart Wall Switch
Trade Mark	TBD
Model Name	PS01
Family Model	DS01, KP014
Model Difference	All models are the same circuit and RF module, except the model name.
Product Description	The EUT is a Smart Wall Switch Operation Frequency: 915MHz Modulation Type: FSK Antenna Designation: PCB Antenna Antenna Gain(Peak) 1dBi Based on the application, features, or specification exhibited in User's Manual. More details of EUT technical specification, please refer to the User's Manual.
Channel List	Please refer to the Note 2.
Adapter	N/A
Battery	N/A
Hardware version	V2.0
Firmware version	0X60
Software version	N/A

Note:

1. For a more detailed features description, please refer to the manufacturer's specifications or the User's Manual.

2.

Channel	Frequency(MHz)
01	915

3.

Table for Filed Antenna

Ant.	Brand	Model Name	Antenna Type	Connector	Gain (dBi)	NOTE
1	N/A	N/A	PCB Antenna	N/A	1	Antenna

Note:The device does not support simultaneous transmission

2.2 DESCRIPTION OF TEST MODES

To investigate the maximum EMI emission characteristics generates from EUT, the test system was pre-scanning tested base on the consideration of following EUT operation mode or test configuration mode which possible have effect on EMI emission level. Each of these EUT operation mode(s) or test configuration mode(s) mentioned above was evaluated respectively.

Pretest Mode	Description
Mode 1	CH01
Mode 2	Normal link

For Radiated Spurious Emission	
Pretest Mode	Description
Mode 1	CH01

For Conducted Emission	
Final Test Mode	Description
Mode 1	CH01
Mode 2	Normal link

Note:

(1) The measurements are performed at the highest, middle, lowest available channels.

2.3 BLOCK DIGRAM SHOWING THE CONFIGURATION OF SYSTEM TESTED

Conducted Emission Mode

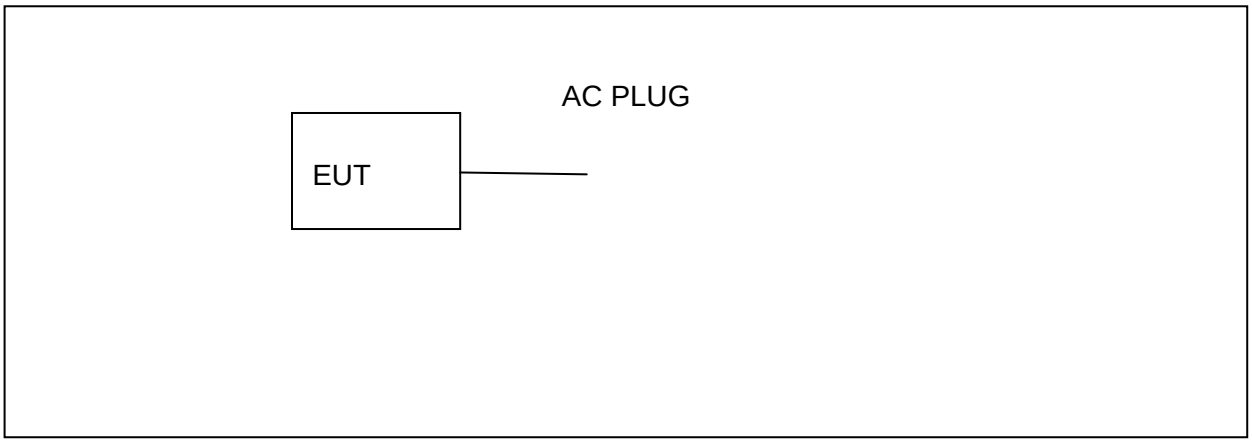

Radiated Spurious Emission Test

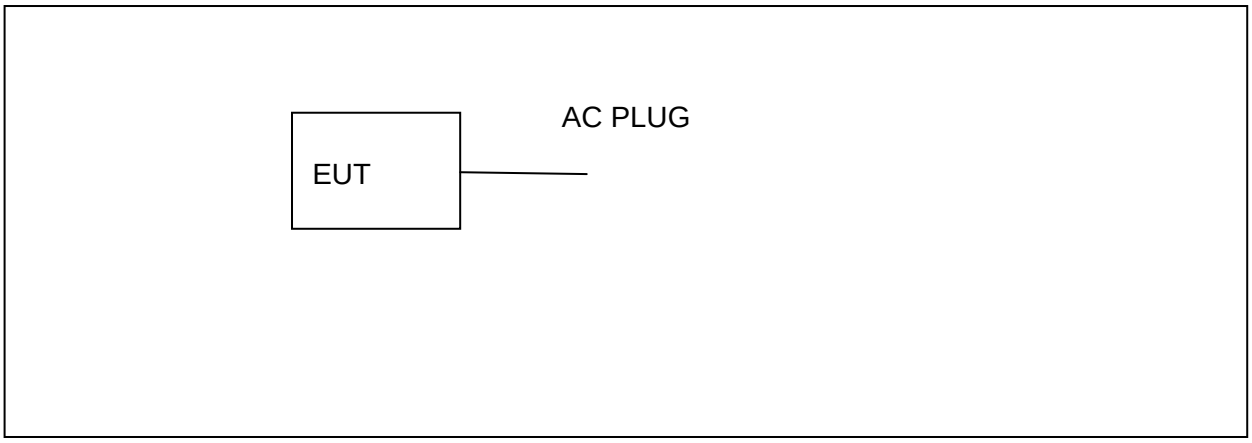

2.4 DESCRIPTION OF SUPPORT UNITS (CONDUCTED MODE)

The EUT has been tested as an independent unit together with other necessary accessories or support units. The following support units or accessories were used to form a representative test configuration during the tests.

Item	Equipment	Mfr/Brand	Model/Type No.	Series No.	Note

Item	Cable Type	Shielded Type	Ferrite Core	Length	Note

Note:

(1) The support equipment was authorized by Declaration of Confirmation.

(2) For detachable type I/O cable should be specified the length in cm in『Length』column.

2.5 EQUIPMENTS LIST FOR ALL TEST ITEMS

Radiation Test equipment

Item	Kind of Equipment	Manufacturer	Type No.	Serial No.	Last calibration	Calibrated until	Calibration period
1	Spectrum Analyzer	Aglient	E4407B	MY45108040	2019.05.13	2020.05.12	1 year
2	Spectrum Analyzer	Agilent	N9020A	MY49100060	2019.08.28	2020.08.27	1 year
3	EMI Test Receiver	Agilent	N9038A	MY53227146	2019.08.28	2020.08.27	1 year
4	Test Receiver	R&S	ESPI	101318	2019.05.13	2020.05.12	1 year
5	Bilog Antenna	TESEQ	CBL6111D	31216	2019.04.15	2020.04.14	1 year
6	50Ω Coaxial Switch	Anritsu	MP59B	6200983705	2018.05.19	2020.05.18	2 year
7	Horn Antenna	EM	EM-AH-10180	2011071402	2019.04.15	2020.04.14	1 year
8	Horn Ant	Schwarzbeck	BBHA 9170	9170-181	2018.12.11	2019.12.10	1 year
9	Amplifier	EMC	EMC051835SE	980246	2019.08.04	2020.08.03	1 year
10	Amplifier	MITEQ	TTA1840-35-HG	177156	2018.12.11	2019.12.10	1 year
11	Loop Antenna	ARA	PLA-1030/B	1029	2019.08.04	2020.08.03	1 year
12	Power Meter	DARE	RPR3006W	15I00041SNO84	2017.04.21	2020.04.20	1 year
13	Test Cable (9KHz-30MHz)	N/A	R-01	N/A	2017.04.21	2020.04.20	3 year
14	Test Cable (30MHz-1GHz)	N/A	R-02	N/A	2017.04.21	2020.04.20	3 year
15	High Test Cable(1G-40GHz)	N/A	R-03	N/A	2017.04.21	2020.04.20	3 year
16	High Test Cable(1G-40GHz)	N/A	R-04	N/A	2017.04.19	2020.04.18	3 year
17	temporary antenna connector (Note)	NTS	R001	N/A	N/A	N/A	N/A

Note:
We will use the temporary antenna connector (soldered on the Multilayer Ceramic Chip board) When conducted test
And this temporary antenna connector is listed within the instrument list

Conduction Test equipment

Item	Kind of Equipment	Manufacturer	Type No.	Serial No.	Last calibration	Calibrated until	Calibration period
1	Test Receiver	R&S	ESCI	101160	2019.05.13	2020.05.12	1 year
2	LISN	R&S	ENV216	101313	2019.04.15	2020.04.14	1 year
3	LISN	SCHWARZBECK	NNLK 8129	8129245	2019.05.13	2020.05.12	1 year
4	50Ω Coaxial Switch	ANRITSU CORP	MP59B	6200983704	2018.05.19	2020.05.18	2 year
5	Test Cable (9KHz-30MHz)	N/A	C01	N/A	2017.04.21	2020.04.20	3 year
6	Test Cable (9KHz-30MHz)	N/A	C02	N/A	2017.04.21	2020.04.20	3 year
7	Test Cable (9KHz-30MHz)	N/A	C03	N/A	2017.04.21	2020.04.20	3 year

Note: Each piece of equipment is scheduled for calibration once a year except the Test Cable which is scheduled for calibration every 3 years.

3. ANTENNA REQUIREMENT

3.1 STANDARD REQUIREMENT

15.203 requirement: For intentional device, according to 15.203: an intentional radiator shall be designed to ensure that no antenna other than that furnished by the responsible party shall be used with the device.

3.2 EUT ANTENNA

The EUT antenna is permanent attached PCB Antenna (Gain: 1dBi). It comply with the standard requirement.

3.3 CONDUCTED EMISSION MEASUREMENT

3.3.1 POWER LINE CONDUCTED EMISSION Limits (Frequency Range 150KHz-30MHz)

FREQUENCY (MHz)	Class A (dBuV)		Class B (dBuV)		Standard
	Quasi-peak	Average	Quasi-peak	Average	
0.15 -0.5			66 - 56 *	56 - 46 *	CISPR
0.50 -5.0			56.00	46.00	CISPR
5.0 -30.0			60.00	50.00	CISPR

0.15 -0.5			66 - 56 *	56 - 46 *	LP002.
0.50 -5.0			56.00	46.00	LP002.
5.0 -30.0			60.00	50.00	LP002.

Note:

(1) The tighter limit applies at the band edges.

(2) The limit of " * " marked band means the limitation decreases linearly with the logarithm of the frequency in the range.

The following table is the setting of the receiver

Receiver Parameters	Setting
Attenuation	10 dB
Start Frequency	0.15 MHz
Stop Frequency	30 MHz
IF Bandwidth	9 kHz

3.3.2 TEST PROCEDURE

a. The EUT was placed 0.4 meters from the horizontal ground plane with EUT being connected to the power mains through a line impedance stabilization network (LISN). All other support equipments powered from additional LISN(s). The LISN provide 50 Ohm/ 50uH of coupling impedance for the measuring instrument.
b. Interconnecting cables that hang closer than 40 cm to the ground plane shall be folded back and forth in the center forming a bundle 30 to 40 cm long.
c. I/O cables that are not connected to a peripheral shall be bundled in the center. The end of the cable may be terminated, if required, using the correct terminating impedance. The overall length shall not exceed 1 m.
d. LISN at least 80 cm from nearest part of EUT chassis.
e. For the actual test configuration, please refer to the related Item –EUT Test Photos.

3.3.3 DEVIATION FROM TEST STANDARD

No deviation

3.3.4 TEST SETUP

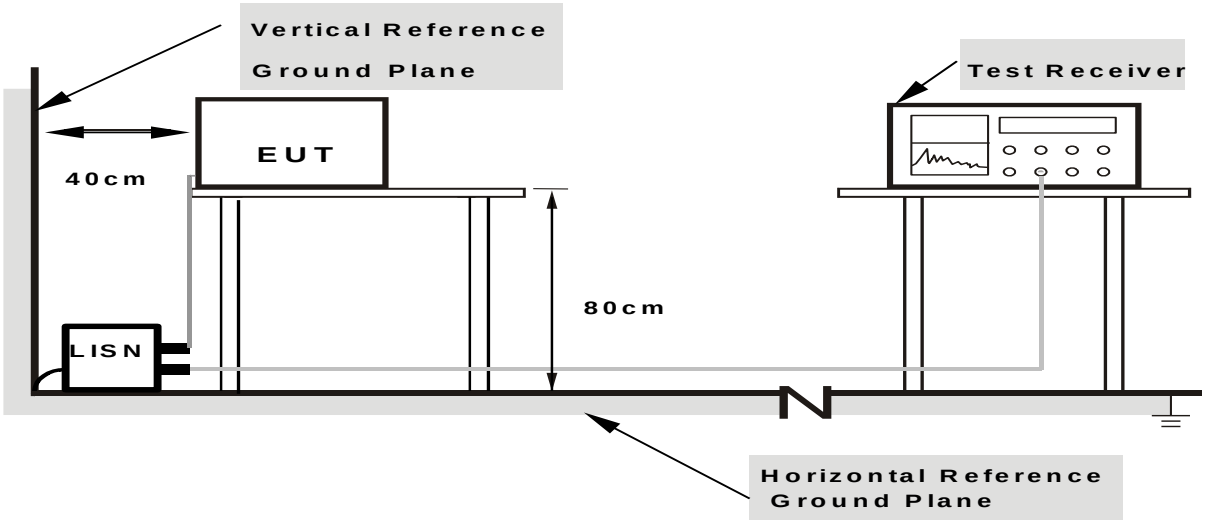

Note: 1.Support units were connected to second LISN.

2.Both of LISNs (AMN) are 80 cm from EUT and at least 80 from other units and other metal planes

3.2.5 TEST RESULT

EUT：	Smart Wall Switch	Model Name. ：	PS01
Temperature：	25 ℃	Relative Humidity：	55%
Pressure：	1010hPa	Phase：	L
Test Voltage ：	AC 120V/60Hz	Test Mode：	Mode 2

Frequency (MHz)	Reading Level (dBμV)	Correct Factor (dB)	Measure-ment (dBμV)	Limits (dBμV)	Margin (dB)	Remark
0.150	45.25	9.75	55.00	65.99	-10.99	QP
0.150	30.91	9.75	40.66	55.99	-15.33	AVG
0.638	23.88	9.74	33.62	56.00	-22.38	QP
0.638	14.44	9.74	24.18	46.00	-21.82	AVG
0.862	24.81	9.74	34.55	56.00	-21.45	QP
0.862	17.63	9.74	27.37	46.00	-18.63	AVG
1.278	24.92	9.75	34.67	56.00	-21.33	QP
1.278	15.19	9.75	24.94	46.00	-21.06	AVG
1.914	24.22	9.78	34.00	56.00	-22.00	QP
1.914	14.85	9.78	24.63	46.00	-21.37	AVG
2.586	25.39	9.80	35.19	56.00	-20.81	QP
2.586	14.92	9.80	24.72	46.00	-21.28	AVG

Remark:
1. All readings are Quasi-Peak and Average values.
2. Factor = Insertion Loss + Cable Loss.

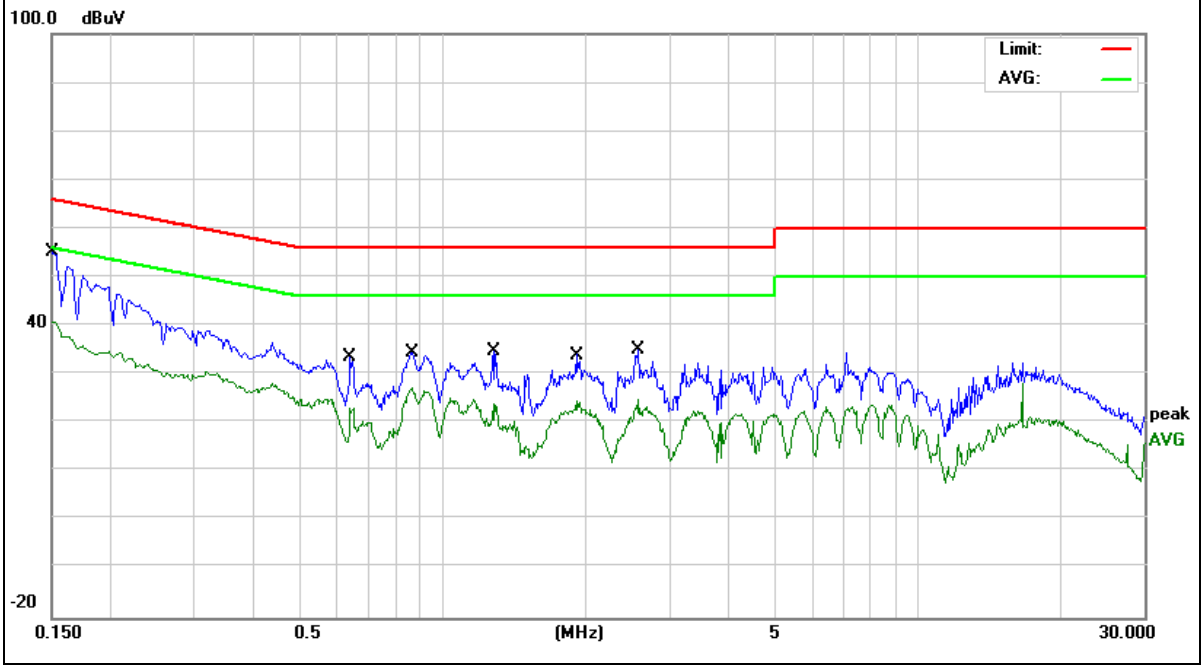

EUT：	Smart Wall Switch	Model Name. ：	PS01
Temperature：	25 ℃	Relative Humidity：	55%
Pressure：	1010hPa	Phase：	N
Test Voltage ：	AC 120V/60Hz	Test Mode：	Mode 2

Frequency (MHz)	Reading Level (dBμV)	Correct Factor (dB)	Measure-ment (dBμV)	Limits (dBμV)	Margin (dB)	Remark
0.150	44.56	9.74	54.30	65.99	-11.69	QP
0.150	31.70	9.74	41.44	55.99	-14.55	AVG
0.850	27.30	9.75	37.05	56.00	-18.95	QP
0.850	19.76	9.75	29.51	46.00	-16.49	AVG
1.270	25.97	9.75	35.72	56.00	-20.28	QP
1.270	18.64	9.75	28.39	46.00	-17.61	AVG
1.910	26.85	9.79	36.64	56.00	-19.36	QP
1.910	16.71	9.79	26.50	46.00	-19.50	AVG
2.566	26.50	9.83	36.33	56.00	-19.67	QP
2.566	16.72	9.83	26.55	46.00	-19.45	AVG
10.210	31.06	10.05	41.11	60.00	-18.89	QP
10.210	21.16	10.05	31.21	50.00	-18.79	AVG

Remark:
1. All readings are Quasi-Peak and Average values.
2. Factor = Insertion Loss + Cable Loss.

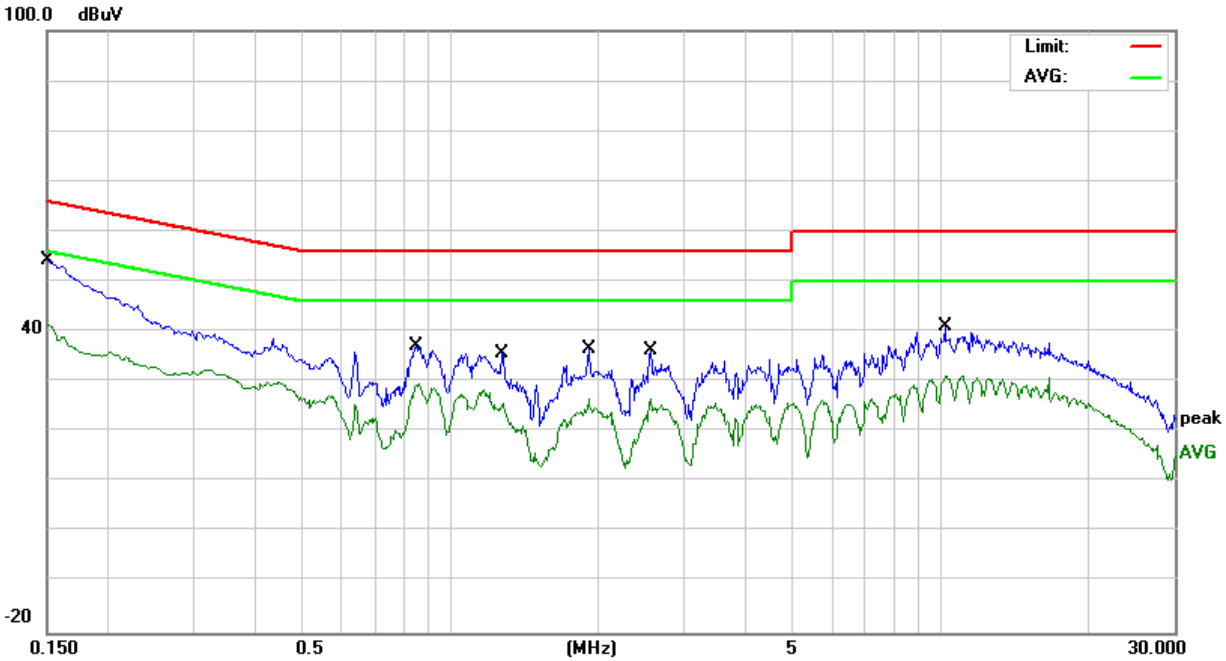

EUT：	Smart Wall Switch	Model Name. ：	PS01
Temperature：	25 ℃	Relative Humidity：	55%
Pressure：	1010hPa	Phase：	L
Test Voltage ：	AC 240V/60Hz	Test Mode：	Mode 2

Frequency (MHz)	Reading Level (dBμV)	Correct Factor (dB)	Measure-ment (dBμV)	Limits (dBμV)	Margin (dB)	Remark
0.158	52.73	9.75	62.48	65.56	-3.08	QP
0.158	36.39	9.75	46.14	55.56	-9.42	AVG
0.214	46.66	9.76	56.42	63.05	-6.63	QP
0.214	30.63	9.76	40.39	53.05	-12.66	AVG
0.914	33.47	9.74	43.21	56.00	-12.79	QP
0.914	24.41	9.74	34.15	46.00	-11.85	AVG
1.126	30.25	9.74	39.99	56.00	-16.01	QP
1.126	20.54	9.74	30.28	46.00	-15.72	AVG
1.846	25.51	9.78	35.29	56.00	-20.71	QP
1.846	15.61	9.78	25.39	46.00	-20.61	AVG
9.206	30.79	9.98	40.77	60.00	-19.23	QP
9.206	19.45	9.98	29.43	50.00	-20.57	AVG

Remark:
1. All readings are Quasi-Peak and Average values.
2. Factor = Insertion Loss + Cable Loss.

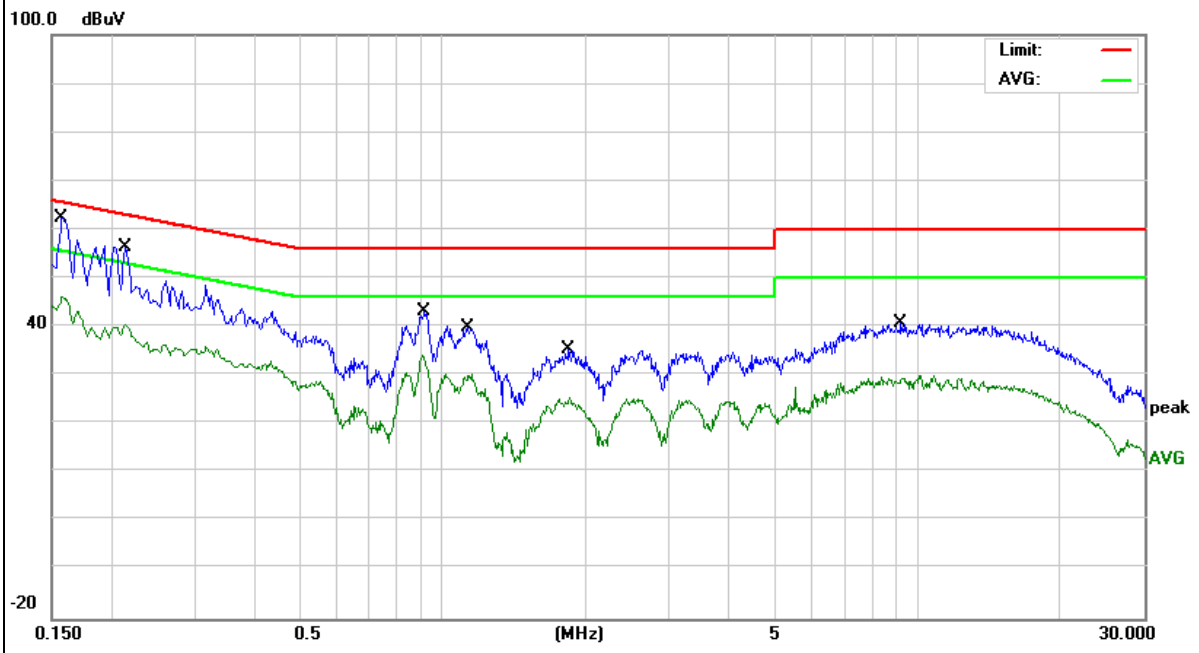

EUT：	Smart Wall Switch	Model Name. ：	PS01
Temperature：	25 ℃	Relative Humidity：	55%
Pressure：	1010hPa	Phase：	N
Test Voltage ：	AC 240V/60Hz	Test Mode：	Mode 2

Frequency (MHz)	Reading Level (dBμV)	Correct Factor (dB)	Measure-ment (dBμV)	Limits (dBμV)	Margin (dB)	Remark
0.154	50.76	9.74	60.50	65.78	-5.28	QP
0.154	37.01	9.74	46.75	55.78	-9.03	AVG
0.210	46.97	9.73	56.70	63.21	-6.51	QP
0.210	32.35	9.73	42.08	53.21	-11.13	AVG
0.334	38.82	9.74	48.56	59.35	-10.79	QP
0.334	28.16	9.74	37.90	49.35	-11.45	AVG
0.910	36.52	9.75	46.27	56.00	-9.73	QP
0.910	26.94	9.75	36.69	46.00	-9.31	AVG
1.090	33.75	9.75	43.50	56.00	-12.50	QP
1.090	24.09	9.75	33.84	46.00	-12.16	AVG
7.042	36.66	9.97	46.63	60.00	-13.37	QP
7.042	25.91	9.97	35.88	50.00	-14.12	AVG

Remark:

1. All readings are Quasi-Peak and Average values.
2. Factor = Insertion Loss + Cable Loss.

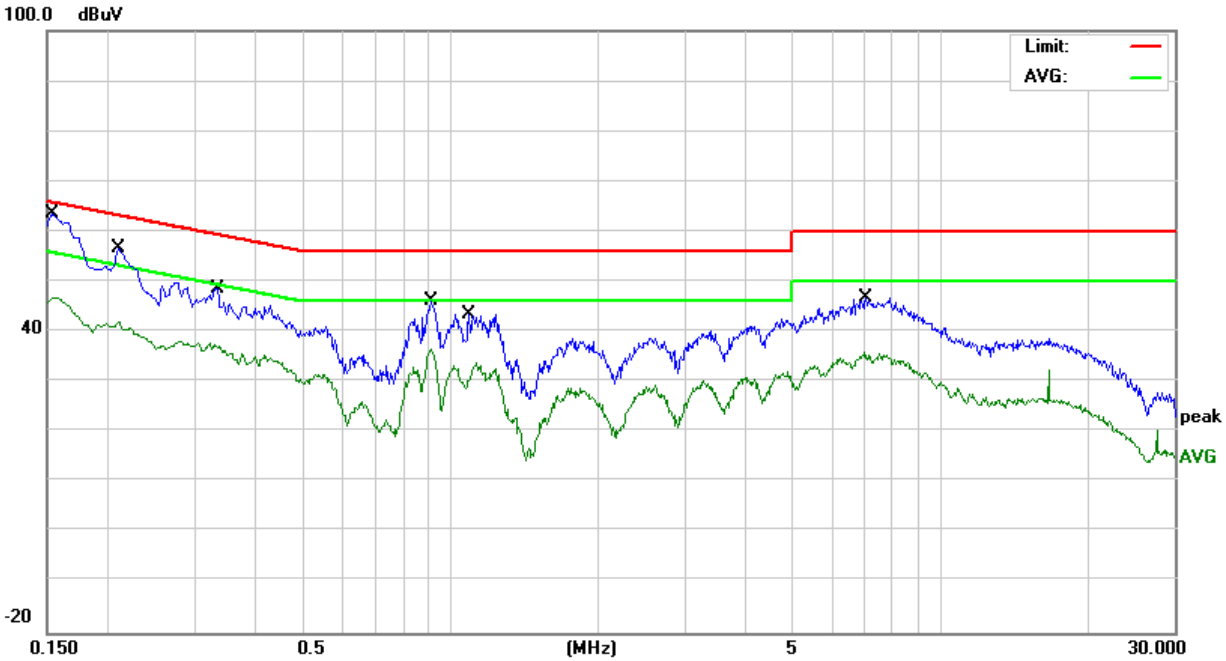

3.4 RADIATED EMISSION MEASUREMENT

3.4.1 Radiated Emission Limits (FCC 15.209)

Frequencies (MHz)	Field Strength (micorvolts/meter)	Measurement Distance (meters)
0.009~0.490	2400/F(KHz)	300
0.490~1.705	24000/F(KHz)	30
1.705~30.0	30	30
Frequency (MHz)	Limit (dBuV)	
30~88	40	3
88~216	43.5	3
216~960	46	3
960 -10000	54.00	3
902-928	94	3

Note:

(1) The tighter limit applies at the band edges.

(2) Emission level (dBuV/m)=20log Emission level (uV/m).

(3) *Note: This is the limit for the fundamental frequency.

LIMITS OF RADIATED EMISSION MEASUREMENT (FCC 15.249)

Frequency of Emission (MHz)	Field Strength of fundamental ((millivolts /meter)	Field Strength of Harmonics (microvolts/meter)
902-928	50	500

Notes:

(1) Emissions radiated outside of the specified frequency bands, except for harmonics, shall be attenuated by at least 50 dB below the level of the fundamental or to the general radiated emission limits in Section 15.209, whichever is the lesser attenuation.

Spectrum Parameter	Setting
Attenuation	Auto
Start Frequency	1000 MHz
Stop Frequency	10th carrier harmonic
RB / VB (emission in restricted band)	1MHz / 1MHz for Peak

Receiver Parameter	Setting
Attenuation	Auto
Start ~ Stop Frequency	9kHz~150kHz / RB 200Hz for QP
Start ~ Stop Frequency	150kHz~30MHz / RB 9kHz for QP
Start ~ Stop Frequency	30MHz~1000MHz / RB 120kHz for QP

3.4.2 TEST PROCEDURE

a. The measuring distance of at 3 m shall be used for measurements at frequency up to 1GHz. For frequencies above 1GHz, any suitable measuring distance may be used.
b. The EUT was placed on the top of a rotating table 0.8 m for below 1GHz and 1.5m for above 1GHz the ground at a 3 meter. The table was rotated 360 degrees to determine the position of the highest radiation.
c. The height of the equipment or of the substitution antenna shall be 0.8 m for below 1GHz and 1.5m for above 1GHz; the height of the test antenna shall vary between 1 m to 4 m. Both horizontal and vertical polarizations of the antenna are set to make the measurement.
d. The initial step in collecting conducted emission data is a spectrum analyzer peak detector mode pre-scanning the measurement frequency range. Significant peaks are then marked and then Quasi Peak detector mode re-measured.
e. If the Peak Mode measured value compliance with and lower than Quasi Peak Mode Limit, the EUT shall be deemed to meet QP Limits and then no additional QP Mode measurement performed.
f. For the actual test configuration, please refer to the related Item –EUT Test Photos.

Note:

Both horizontal and vertical antenna polarities were tested
and performed pretest to three orthogonal axis. The worst case emissions were reported

3.4.3 DEVIATION FROM TEST STANDARD

No deviation

（A）Radiated Emission Test-Up Frequency Below 30MHz

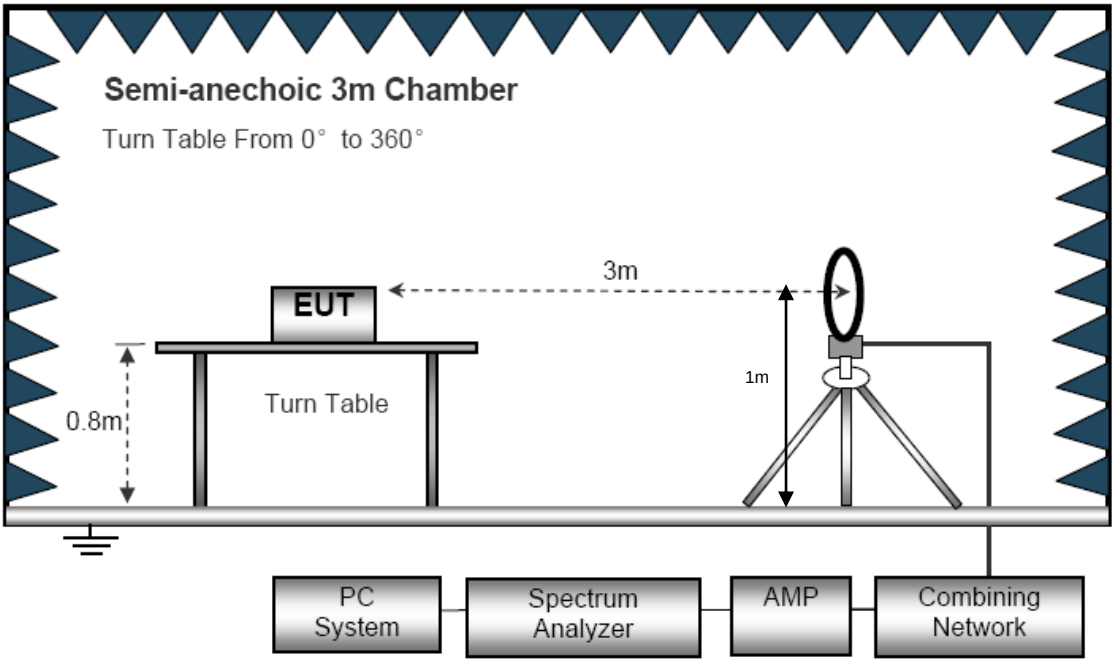

（B）Radiated Emission Test-Up Frequency 30MHz~1GHz

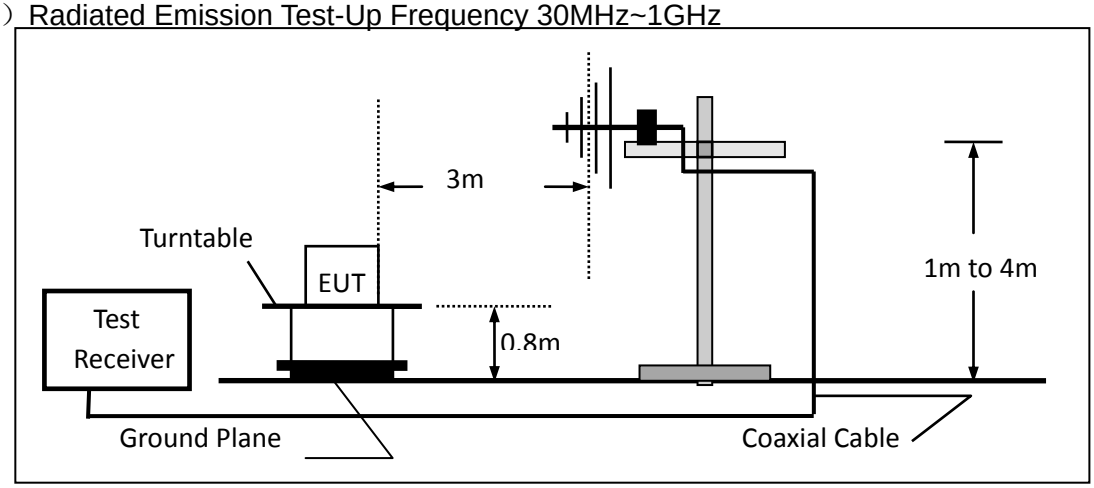

（C）Radiated Emission Test-Up Frequency Above 1GHz

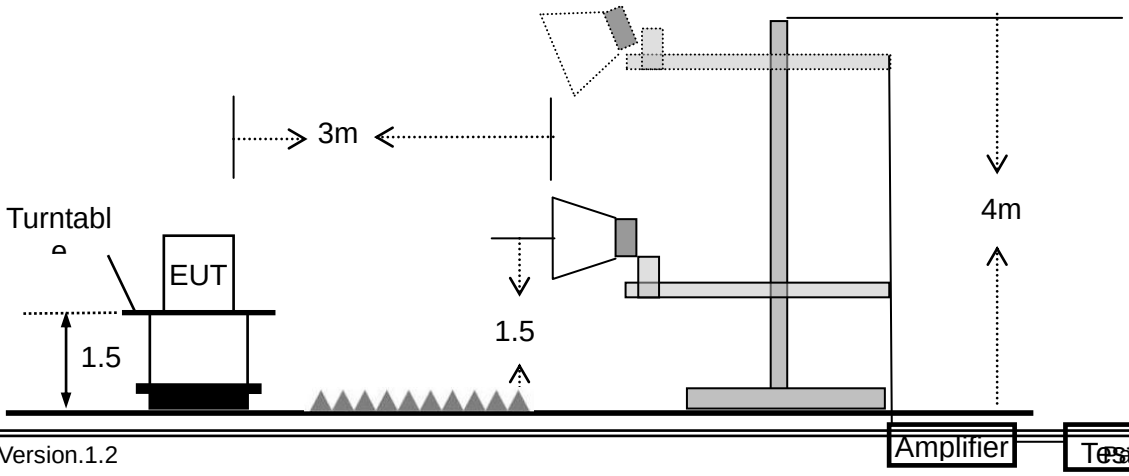

3.4.4 TEST RESULTS (BELOW 30MHz)

EUT :	Smart Wall Switch	Model Name. :	PS01
Temperature :	20 ℃	Relative Humidtity :	48%
Pressure :	1010 hPa	Test Voltage :	AC 120V/60Hz
Test Mode :	TX	Polarization :	--

Freq.	Reading	Limit	Margin	State
(MHz)	(dBuV/m)	(dBuV/m)	(dB)	P/F
--	--	--	--	PASS
--	--	--	--	PASS

NOTE:

The amplitude of spurious emissions which are attenuated by more than 20dB below the permissible value has no need to be reported.
Distance extrapolation factor =20 log (specific distance/test distance)(dB);
Limit line = specific limits(dBuv) + distance extrapolation factor.

3.4.5 TEST RESULTS (BELOW 1000 MHz)

EUT :	Smart Wall Switch	Model Name :	PS01
Temperature :	25 ℃	Relative Humidity :	51%
Pressure :	1010 hPa	Test Voltage :	AC 120V/60Hz
Test Mode :	Mode 1	Polarization :	Vertical

Frequency (MHz)	Meter Reading (dBμV)	Factor (dB)	Emission Level (dBμV/m)	Limits (dBμV/m)	Margin (dB)	Detector Type
33.9174	10.35	16.87	27.22	40.00	-12.78	QP
56.0007	16.53	6.46	22.99	40.00	-17.01	QP
119.8556	18.92	12.33	31.25	43.50	-12.25	QP
176.2686	19.53	9.81	29.34	43.50	-14.16	QP
223.7334	22.99	10.91	33.90	46.00	-12.10	QP
945.4397	7.90	28.10	36.00	46.00	-10.00	QP

Remark:
1. Factor = Antenna Factor + Cable Loss – Pre-amplifier.

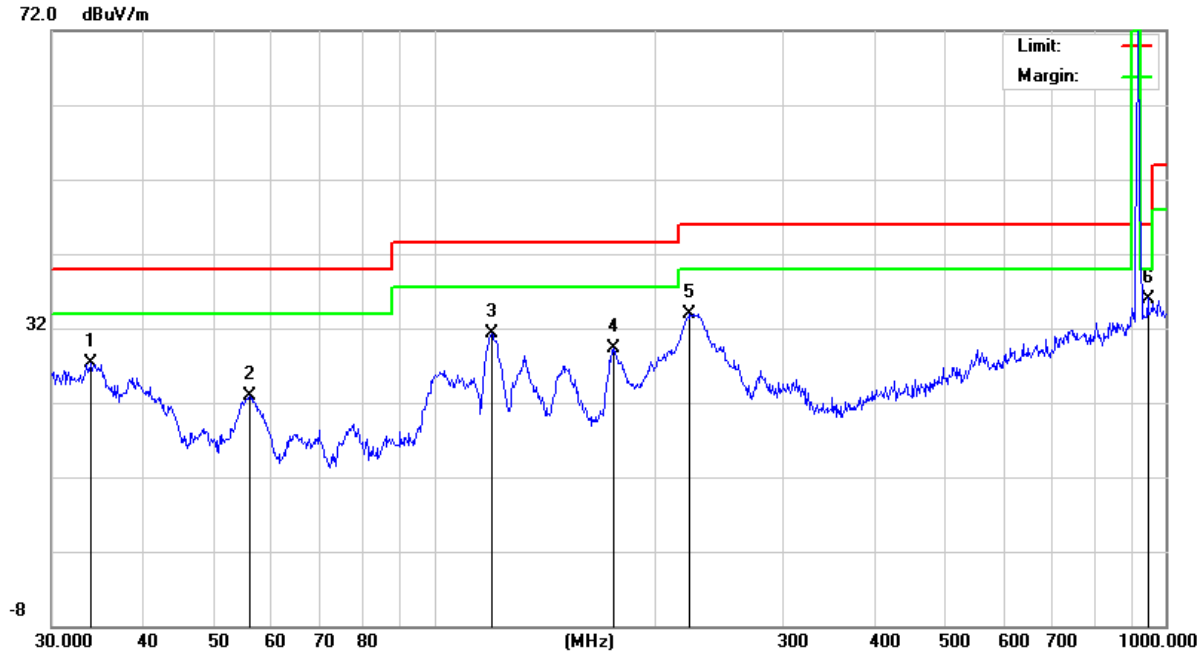

EUT :	Smart Wall Switch	Model Name :	PS01
Temperature :	25 ℃	Relative Humidity :	51%
Pressure :	1010 hPa	Test Voltage :	AC 120V/60Hz
Test Mode :	Mode 1	Polarization :	Horizontal

Frequency (MHz)	Meter Reading (dBμV)	Factor (dB)	Emission Level (dBμV/m)	Limits (dBμV/m)	Margin (dB)	Detector Type
100.5806	13.51	11.10	24.61	43.50	-18.89	QP
130.8369	16.40	12.55	28.95	43.50	-14.55	QP
146.8877	17.07	12.10	29.17	43.50	-14.33	QP
230.0985	26.35	11.00	37.35	46.00	-8.65	QP
305.6800	17.49	14.86	32.35	46.00	-13.65	QP
857.0247	11.12	25.93	37.05	46.00	-8.95	QP

Remark:
1. Factor = Antenna Factor + Cable Loss – Pre-amplifier.

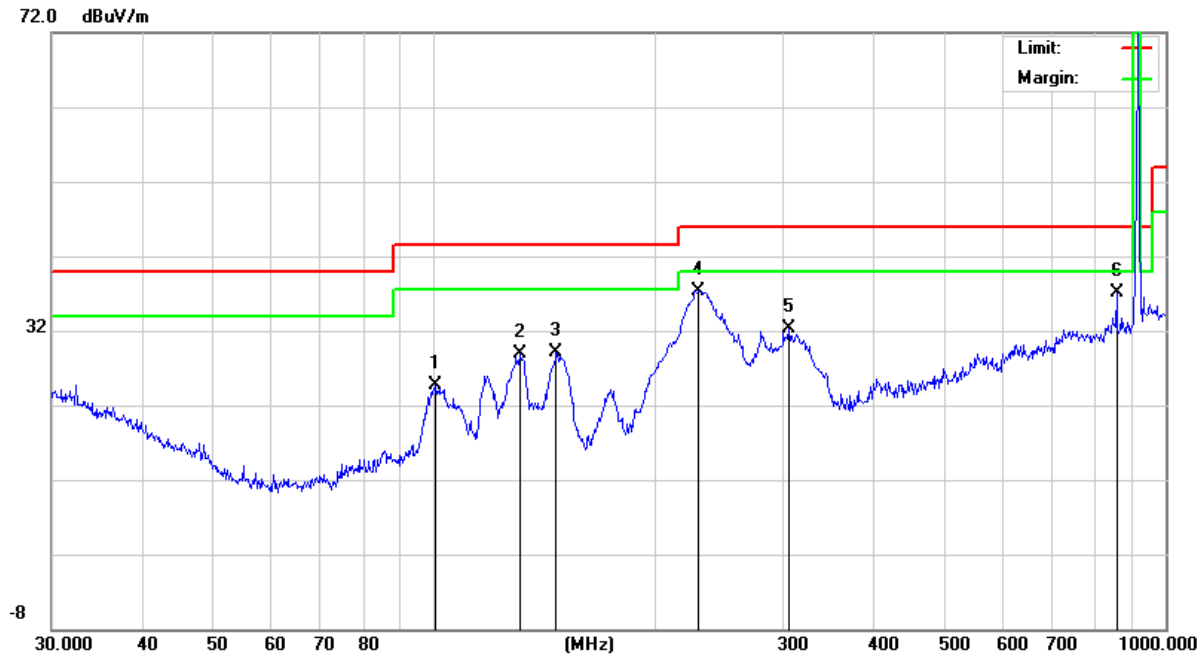

3.4.6 TEST RESULTS (ABOVE 1000 MHZ)

EUT：	Smart Wall Switch	Model Name ：	PS01
Temperature：	25 ℃	Relative Humidity：	51%
Pressure：	1010 hPa	Test Voltage ：	AC 120V/60Hz
Test Mode ：	Mode 1	Polarization：	Horizontal

Frequency (MHz)	Meter Reading (dBμV)	Factor (dB)	Emission Level (dBμV/m)	Limits (dBμV/m)	Margin (dB)	Detector Type
1830.000	40.17	-7.05	33.12	74.00	-40.88	peak
2745.000	41.00	-3.08	37.92	74.00	-36.08	peak
3660.000	32.21	1.15	33.36	74.00	-40.64	peak

Remark:
Factor = Antenna Factor + Cable Loss – Pre-amplifier.

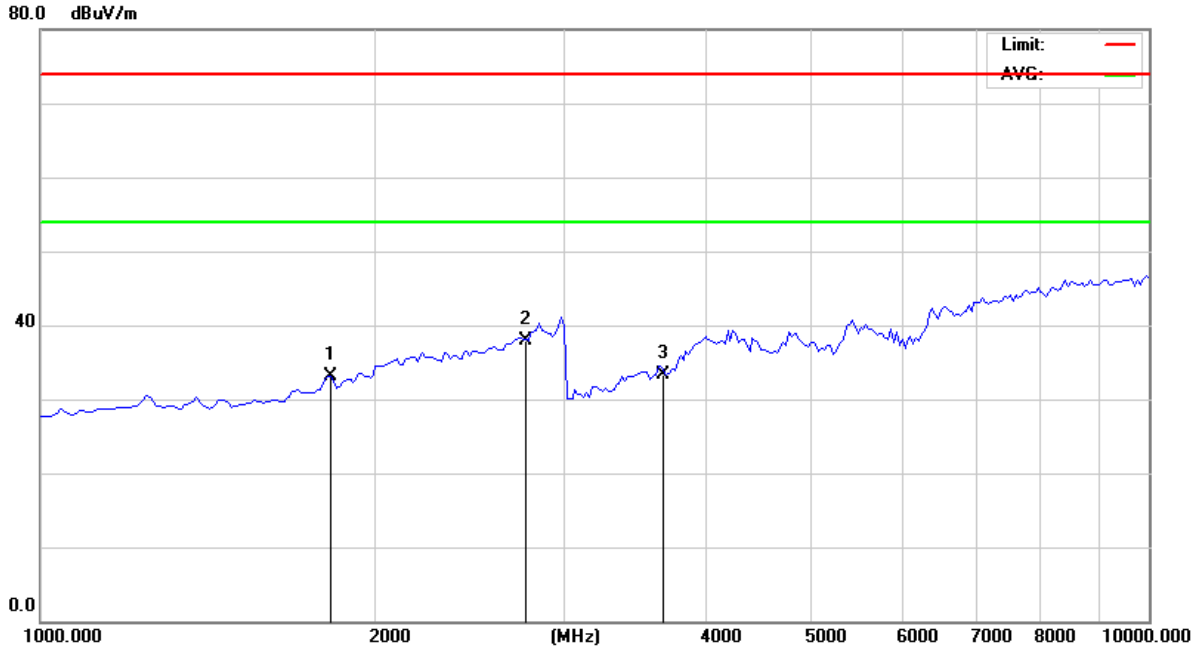

EUT：	Smart Wall Switch	Model Name ：	PS01
Temperature：	25 ℃	Relative Humidity：	51%
Pressure：	1010 hPa	Test Voltage ：	AC 120V/60Hz
Test Mode ：	Mode 1	Polarization：	Vertical

Frequency (MHz)	Meter Reading (dBμV)	Factor (dB)	Emission Level (dBμV/m)	Limits (dBμV/m)	Margin (dB)	Detector Type
1830.000	39.35	-7.05	32.30	74.00	-41.70	peak
2745.000	41.61	-3.08	38.53	74.00	-35.47	peak
3660.000	33.77	1.15	34.92	74.00	-39.08	peak

Remark:
Factor = Antenna Factor + Cable Loss – Pre-amplifier.

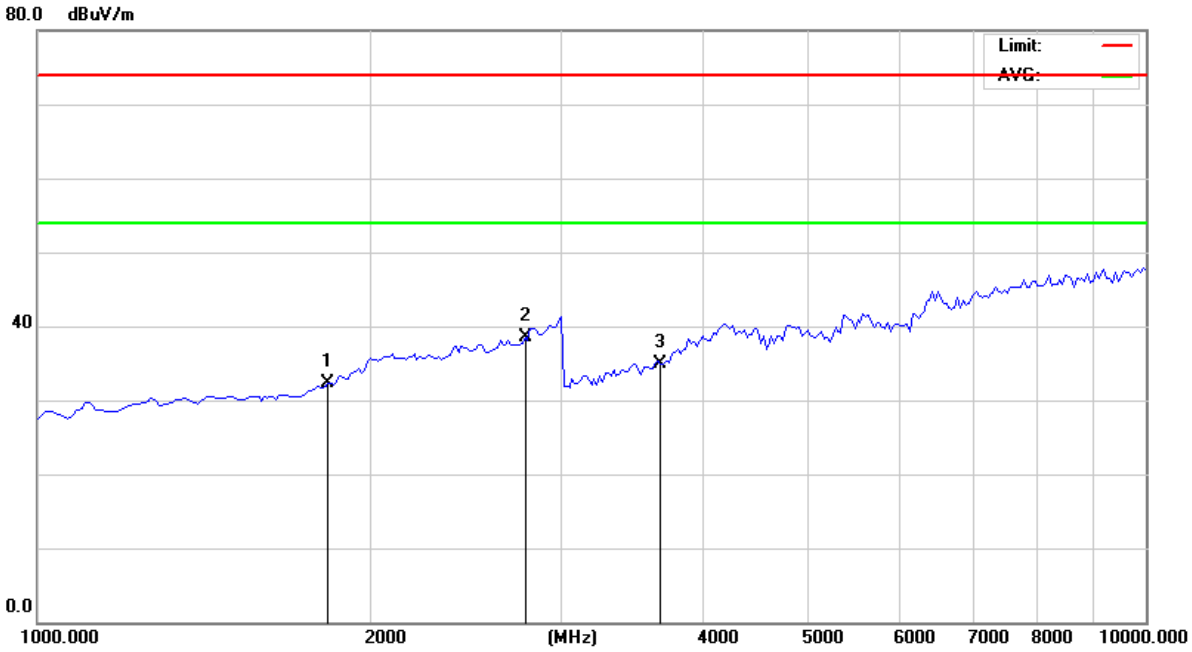

Note: EUT Pre-scan X/Y/Z orientation, only worst case is presented in the report(X orientation).

3.4.7 TEST RESULTS (RESTRICTED BANDS REQUIREMENTS)

EUT：	Smart Wall Switch	Model Name ：	PS01
Temperature：	25 ℃	Relative Humidity：	51%
Pressure：	1010 hPa	Test Voltage ：	AC 120V/60Hz
Test Mode ：	TX-915MHz	Polarization：	Horizontal

Frequency (MHz)	Meter Reading (dBμV)	Factor (dB)	Emission Level (dBμV/m)	Limits (dBμV/m)	Margin (dB)	Detector Type
902.000	8.52	29.04	37.56	46.00	-8.44	QP
915.000	63.89	26.94	90.83	94.0	-3.17	peak
915.000	61.42	26.94	88.36	94.0	-5.64	QP
928.000	6.30	30.51	36.81	46.00	-9.19	QP

Remark:
Factor = Antenna Factor + Cable Loss – Pre-amplifier.

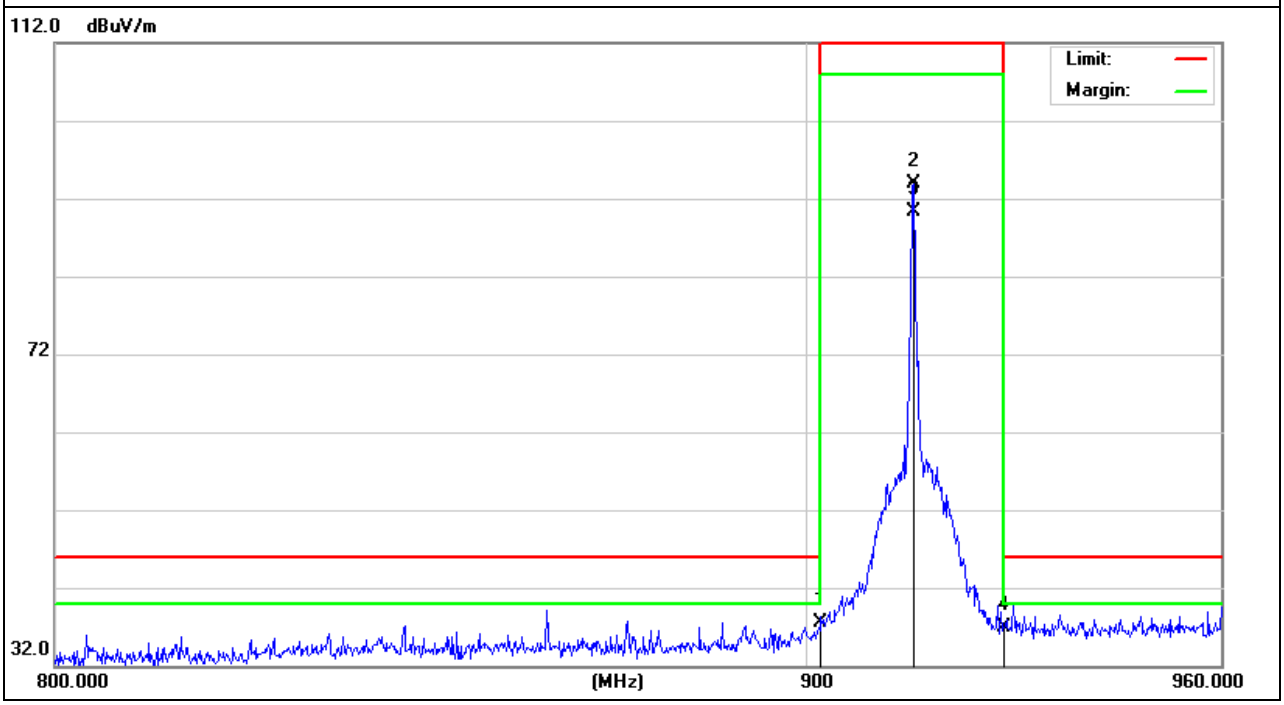

EUT：	Smart Wall Switch	Model Name ：	PS01
Temperature：	25 ℃	Relative Humidity：	51%
Pressure：	1010 hPa	Test Voltage ：	AC 120V/60Hz
Test Mode ：	TX-915MHz	Polarization：	Vertical

Frequency (MHz)	Meter Reading (dBμV)	Factor (dB)	Emission Level (dBμV/m)	Limits (dBμV/m)	Margin (dB)	Detector Type
902.000	6.17	29.04	35.21	46.00	-10.79	QP
915.040	60.31	29.77	90.08	94.0	-3.92	peak
915.040	57.79	29.77	87.56	94.0	-6.44	QP
928.000	5.74	30.51	36.25	46.00	-9.75	QP

Remark:
Factor = Antenna Factor + Cable Loss – Pre-amplifier.

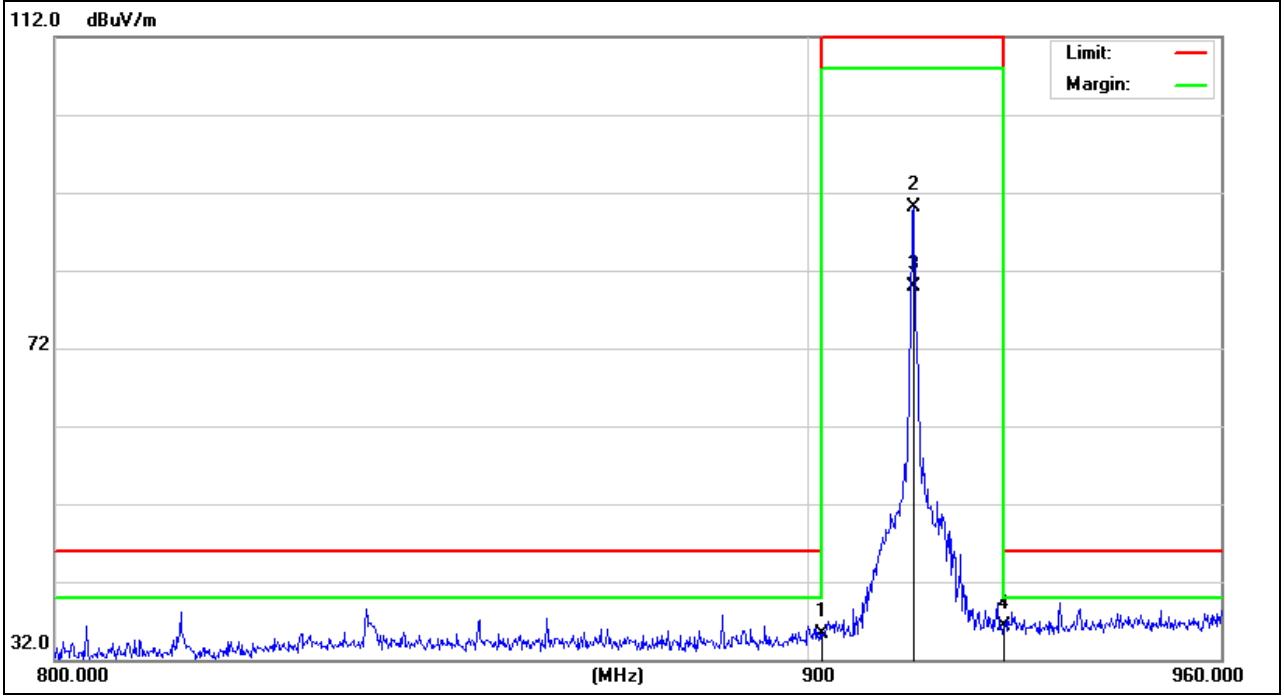

4. BANDWIDTH TEST

4.1 TEST PROCEDURE

a. The EUT was directly connected to the spectrum analyzer and antenna output port as show in the block diagram below,
b. Spectrum Setting : The resolution bandwidth (RBW) shall be in the range of 1% to 5% of the actual occupied / x dB bandwidth and the video bandwidth (VBW) shall not be smaller than three times the RBW value., Sweep time = Auto.

4.2DEVIATION FROM STANDARD

No deviation.

4.3TEST SETUP

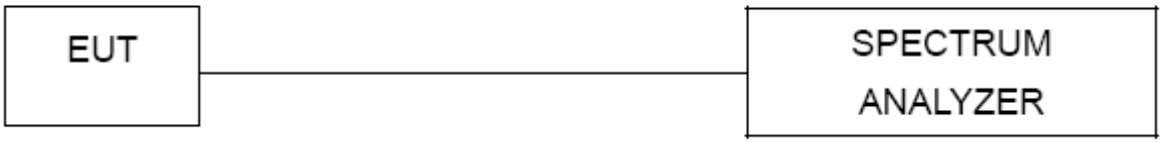

4.4TEST RESULTS

EUT：	Smart Wall Switch	Model Name ：	PS01
Temperature：	26 ℃	Relative Humidity：	53%
Pressure：	1020 hPa	Test Power ：	AC 120V/60Hz
Test Mode ：	Mode 1		

Test Channel	Frequency (MHz)	20 dBc Bandwidth (MHz)
CH01	915	0.185

915 MHz

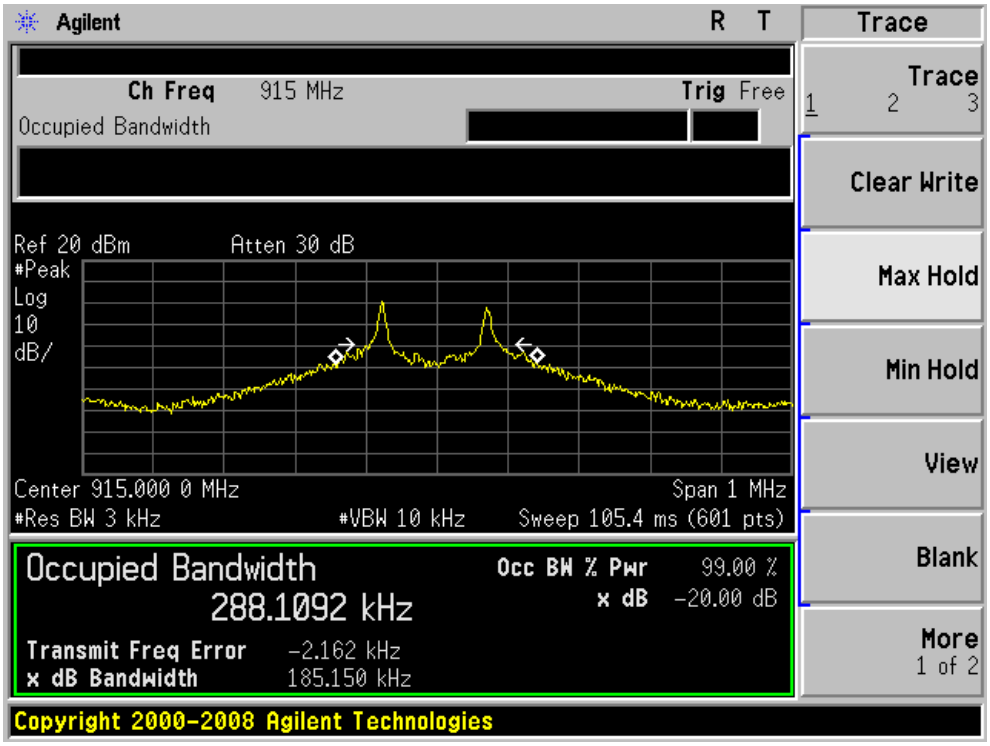

END OF REPORT