DIGITAL EMC CO., LTD

DUT: VK250C_slide Down; Type: Tri-mode; Serial: FCC #2

Communication System: FCC AMPS; Frequency: 824.04 MHz;Duty Cycle: 1:1
Medium parameters used (interpolated): f = 824.04 MHz; σ = 0.905 mho/m; ε_r = 43.2; ρ = 1000 kg/m^3
Phantom section: Right Section

DASY4 Configuration:
Probe: ET3DV6 - SN1702; ConvF(6.52, 6.52, 6.52); Calibrated: 2004-02-17; Electronics: DAE3 Sn519
Phantom: SAM with 835MHz; Type: SAM; Serial: TP-1223
Measurement SW: DASY4, V4.4 Build 3; Postprocessing SW: SEMCAD, V1.8 Build 130

Date: 2004-12-17; Ambient Temp: 23.0; Tissue Temp:22.4

Right Touch, AMPS Ch.991, Ant In, Slide Down, Standard Battery

Area Scan (51x101x1): Measurement grid: dx=15mm, dy=15mm
Zoom Scan (5x5x7)/Cube 0: Measurement grid: dx=8mm, dy=8mm, dz=5mm
Power Drift = -0.1 dB
Peak SAR (extrapolated) = 1.36 W/kg
SAR(1 g) = 1.04 mW/g; SAR(10 g) = 0.745 mW/g

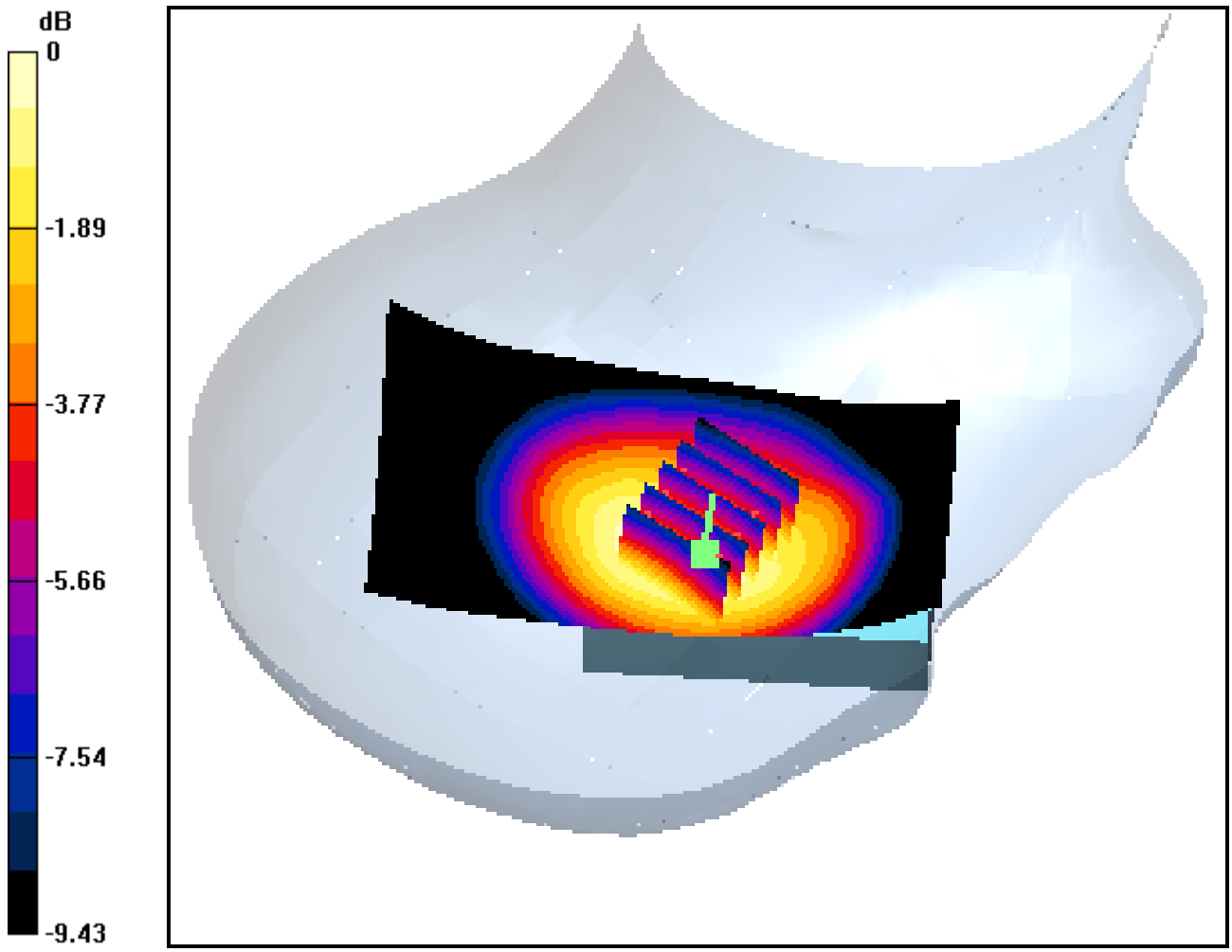

0 dB = 1.09mW/g

DIGITAL EMC CO., LTD

DUT: VK250C_slide Down; Type: Tri-mode; Serial: FCC #2

Communication System: FCC AMPS; Frequency: 835.89 MHz;Duty Cycle: 1:1
Medium parameters used (interpolated): f = 835.89 MHz; σ = 0.914 mho/m; ε_r = 43; ρ = 1000 kg/m^3
Phantom section: Right Section

DASY4 Configuration:
Probe: ET3DV6 - SN1702; ConvF(6.52, 6.52, 6.52); Calibrated: 2004-02-17; Electronics: DAE3 Sn519
Phantom: SAM with 835MHz; Type: SAM; Serial: TP-1223
Measurement SW: DASY4, V4.4 Build 3; Postprocessing SW: SEMCAD, V1.8 Build 130

Date: 2004-12-17; Ambient Temp: 23.0; Tissue Temp:22.4

Right Touch, AMPS Ch.363, Ant In, Slide Down, Standard Battery

Area Scan (51x101x1): Measurement grid: dx=15mm, dy=15mm
Zoom Scan (5x5x7)/Cube 0: Measurement grid: dx=8mm, dy=8mm, dz=5mm
Power Drift = -0.2 dB
Peak SAR (extrapolated) = 1.02 W/kg
SAR(1 g) = 0.781 mW/g; SAR(10 g) = 0.559 mW/g

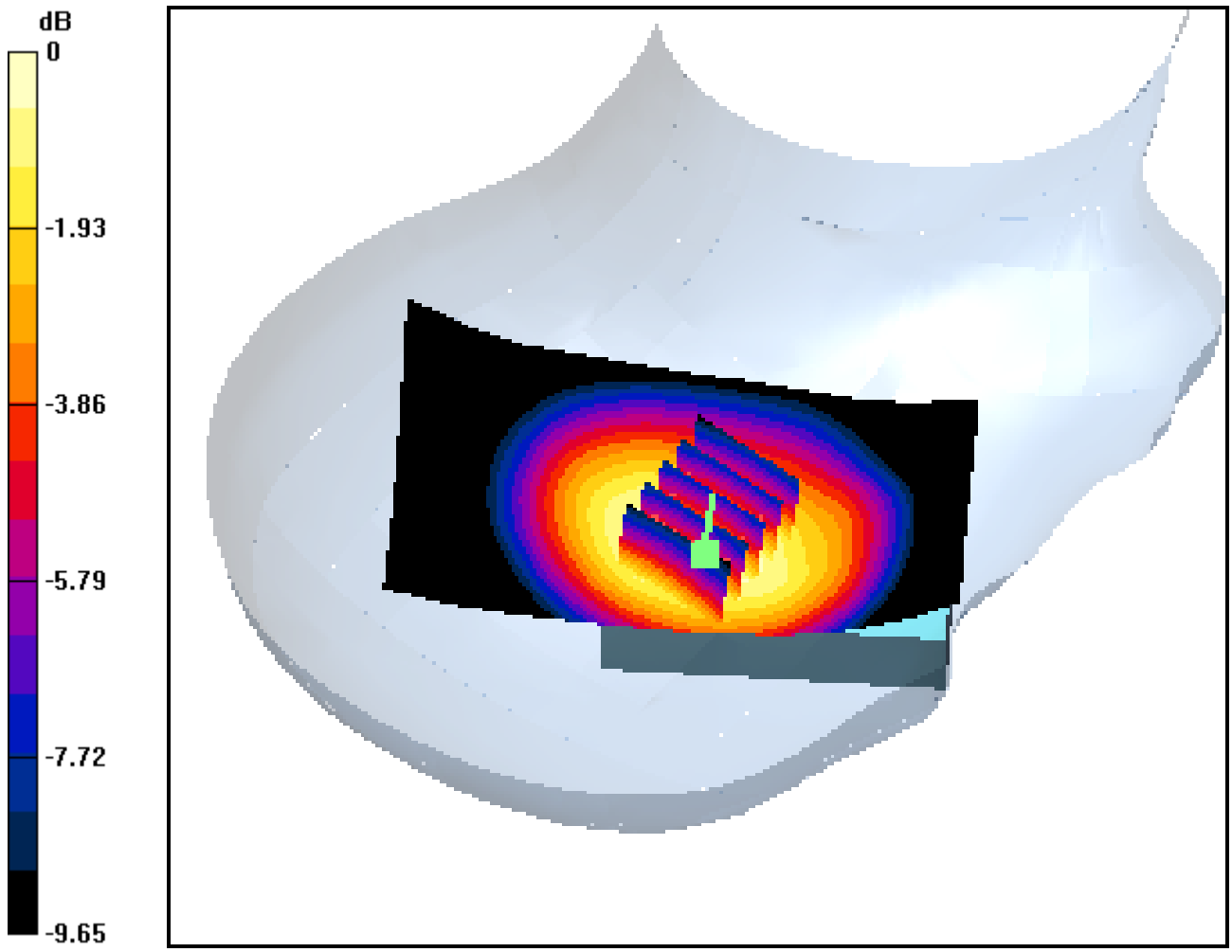

0 dB = 0.826mW/g

DIGITAL EMC CO., LTD

DUT: VK250C_slide Down; Type: Tri-mode; Serial: FCC #2

Communication System: FCC AMPS; Frequency: 848.97 MHz;Duty Cycle: 1:1
Medium parameters used (interpolated): f = 848.97 MHz; σ = 0.927 mho/m; ε_r = 42.9; ρ = 1000 kg/m^3
Phantom section: Right Section

DASY4 Configuration:
Probe: ET3DV6 - SN1702; ConvF(6.52, 6.52, 6.52); Calibrated: 2004-02-17; Electronics: DAE3 Sn519
Phantom: SAM with 835MHz; Type: SAM; Serial: TP-1223
Measurement SW: DASY4, V4.4 Build 3; Postprocessing SW: SEMCAD, V1.8 Build 130

Date: 2004-12-17; Ambient Temp: 23.0; Tissue Temp:22.4

Right Touch, AMPS Ch.799, Ant In, Slide Down, Standard Battery

Area Scan (51x101x1): Measurement grid: dx=15mm, dy=15mm
Zoom Scan (5x5x7)/Cube 0: Measurement grid: dx=8mm, dy=8mm, dz=5mm
Power Drift = -0.2 dB
Peak SAR (extrapolated) = 0.980 W/kg
SAR(1 g) = 0.751 mW/g; SAR(10 g) = 0.537 mW/g

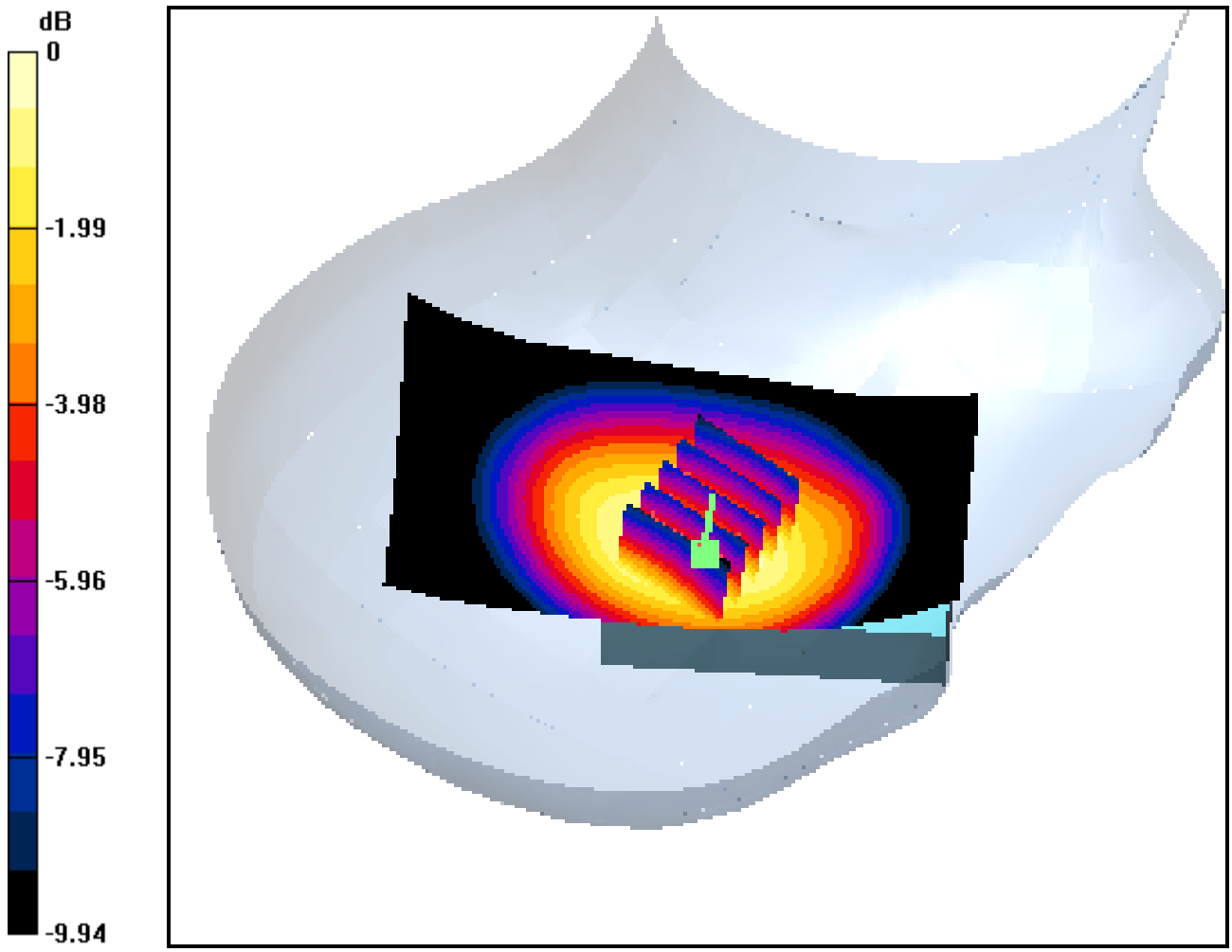

0 dB = 0.794mW/g

DIGITAL EMC CO., LTD

DUT: VK250C_slide Down; Type: Tri-mode; Serial: FCC #2

Communication System: FCC AMPS; Frequency: 824.04 MHz;Duty Cycle: 1:1
Medium parameters used (interpolated): f = 824.04 MHz; σ = 0.905 mho/m; ε_r = 43.2; ρ = 1000 kg/m^3
Phantom section: Right Section

DASY4 Configuration:
Probe: ET3DV6 - SN1702; ConvF(6.52, 6.52, 6.52); Calibrated: 2004-02-17; Electronics: DAE3 Sn519
Phantom: SAM with 835MHz; Type: SAM; Serial: TP-1223
Measurement SW: DASY4, V4.4 Build 3; Postprocessing SW: SEMCAD, V1.8 Build 130

Date: 2004-12-17; Ambient Temp: 23.0; Tissue Temp:22.4

Right Tilt, AMPS Ch.991, Ant In, Slide Down, Standard Battery

Area Scan (51x101x1): Measurement grid: dx=15mm, dy=15mm
Zoom Scan (5x5x7)/Cube 0: Measurement grid: dx=8mm, dy=8mm, dz=5mm
Power Drift = -0.1 dB
Peak SAR (extrapolated) = 1.13 W/kg
SAR(1 g) = 0.795 mW/g; SAR(10 g) = 0.553 mW/g

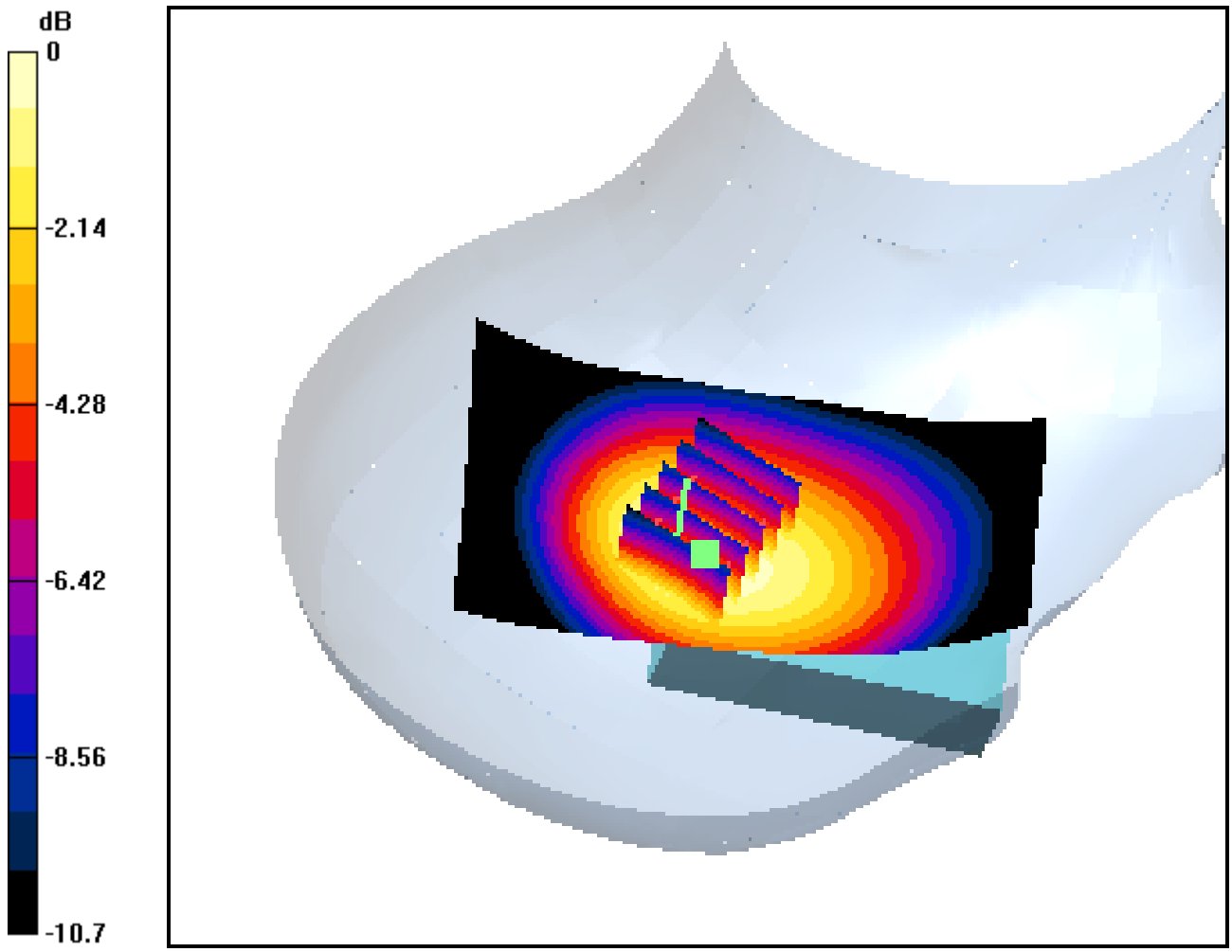

0 dB = 0.846mW/g

DIGITAL EMC CO., LTD

DUT: VK250C_slide Down; Type: Tri-mode; Serial: FCC #2

Communication System: FCC AMPS; Frequency: 835.89 MHz;Duty Cycle: 1:1
Medium parameters used (interpolated): f = 835.89 MHz; σ = 0.914 mho/m; ε_r = 43; ρ = 1000 kg/m^3
Phantom section: Right Section

DASY4 Configuration:
Probe: ET3DV6 - SN1702; ConvF(6.52, 6.52, 6.52); Calibrated: 2004-02-17; Electronics: DAE3 Sn519
Phantom: SAM with 835MHz; Type: SAM; Serial: TP-1223
Measurement SW: DASY4, V4.4 Build 3; Postprocessing SW: SEMCAD, V1.8 Build 130

Date: 2004-12-17; Ambient Temp: 23.0; Tissue Temp:22.4

Right Tilt, AMPS Ch.363, Ant In, Slide Down, Standard Battery

Area Scan (51x101x1): Measurement grid: dx=15mm, dy=15mm
Zoom Scan (5x5x7)/Cube 0: Measurement grid: dx=8mm, dy=8mm, dz=5mm
Power Drift = -0.2 dB
Peak SAR (extrapolated) = 0.899 W/kg
SAR(1 g) = 0.619 mW/g; SAR(10 g) = 0.420 mW/g

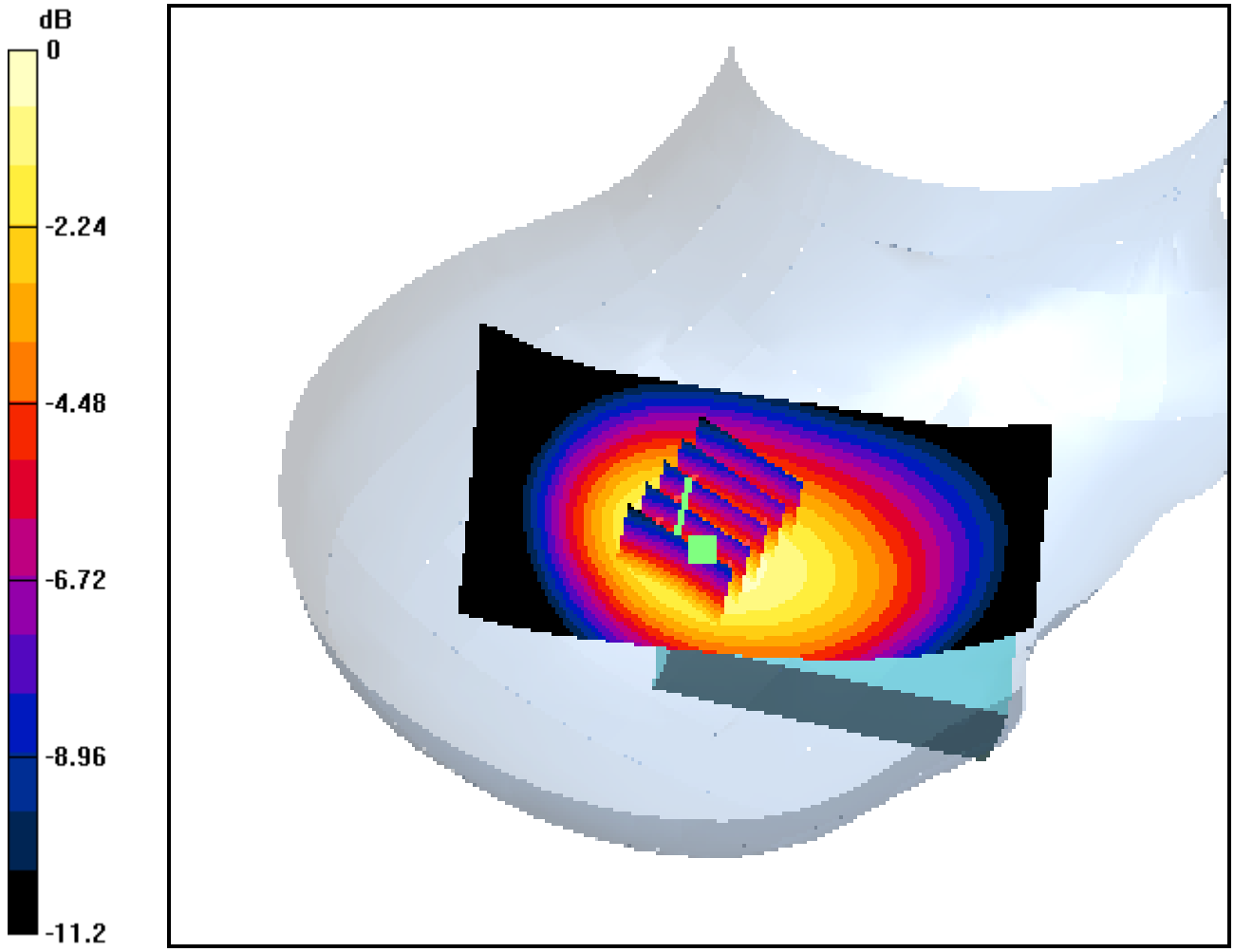

0 dB = 0.661mW/g

DIGITAL EMC CO., LTD

DUT: VK250C_slide Down; Type: Tri-mode; Serial: FCC #2

Communication System: FCC AMPS; Frequency: 848.97 MHz;Duty Cycle: 1:1
Medium parameters used (interpolated): f = 848.97 MHz; σ = 0.927 mho/m; ε_r = 42.9; ρ = 1000 kg/m^3
Phantom section: Right Section

DASY4 Configuration:
Probe: ET3DV6 - SN1702; ConvF(6.52, 6.52, 6.52); Calibrated: 2004-02-17; Electronics: DAE3 Sn519
Phantom: SAM with 835MHz; Type: SAM; Serial: TP-1223
Measurement SW: DASY4, V4.4 Build 3; Postprocessing SW: SEMCAD, V1.8 Build 130

Date: 2004-12-17; Ambient Temp: 23.0; Tissue Temp:22.4

Right Tilt, AMPS Ch.799, Ant In, Slide Down, Standard Battery

Area Scan (51x101x1): Measurement grid: dx=15mm, dy=15mm
Zoom Scan (5x5x7)/Cube 0: Measurement grid: dx=8mm, dy=8mm, dz=5mm
Power Drift = -0.3 dB
Peak SAR (extrapolated) = 0.908 W/kg
SAR(1 g) = 0.620 mW/g; SAR(10 g) = 0.415 mW/g

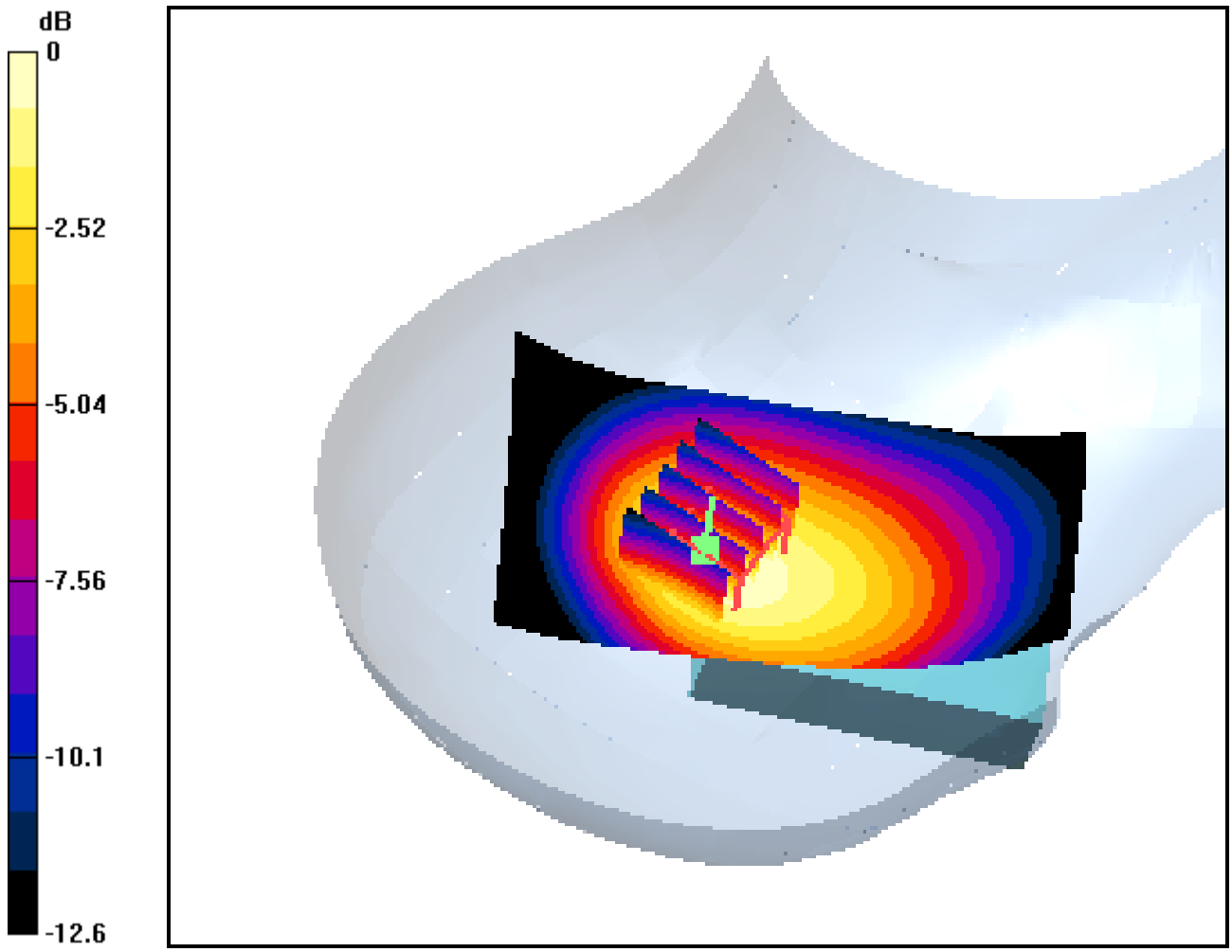

0 dB = 0.669mW/g

DIGITAL EMC CO., LTD

DUT: VK250C_slide up; Type: Tri-mode; Serial: FCC #2

Communication System: FCC AMPS; Frequency: 824.04 MHz;Duty Cycle: 1:1
Medium parameters used (interpolated): f = 824.04 MHz; σ = 0.905 mho/m; ε_r = 43.2; ρ = 1000 kg/m^3
Phantom section: Left Section

DASY4 Configuration:
Probe: ET3DV6 - SN1702; ConvF(6.52, 6.52, 6.52); Calibrated: 2004-02-17; Electronics: DAE3 Sn519
Phantom: SAM with 835MHz; Type: SAM; Serial: TP-1223
Measurement SW: DASY4, V4.4 Build 3; Postprocessing SW: SEMCAD, V1.8 Build 130

Date: 2004-12-17; Ambient Temp: 23.0; Tissue Temp:22.3

Left Touch, AMPS Ch.991, Ant In, Slide Down, Standard Battery

Area Scan (51x101x1): Measurement grid: dx=15mm, dy=15mm
Zoom Scan (5x5x7)/Cube 0: Measurement grid: dx=8mm, dy=8mm, dz=5mm
Power Drift = -0.1 dB
Peak SAR (extrapolated) = 1.32 W/kg
SAR(1 g) = 0.992 mW/g; SAR(10 g) = 0.713 mW/g

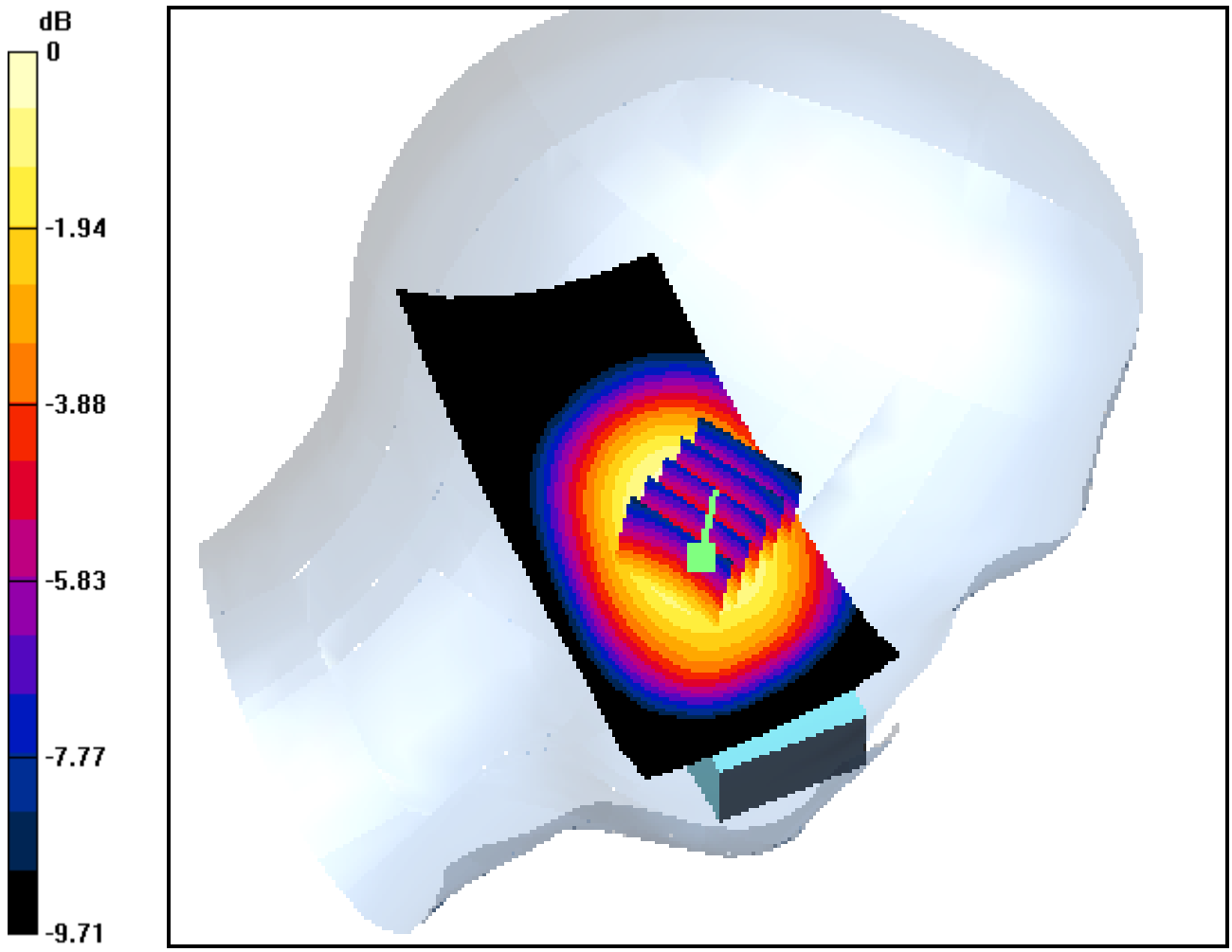

0 dB = 1.05mW/g

DIGITAL EMC CO., LTD

DUT: VK250C_slide up; Type: Tri-mode; Serial: FCC #2

Communication System: FCC AMPS; Frequency: 835.89 MHz;Duty Cycle: 1:1
Medium parameters used (interpolated): f = 835.89 MHz; σ = 0.914 mho/m; ε_r = 43; ρ = 1000 kg/m^3
Phantom section: Left Section

DASY4 Configuration:
Probe: ET3DV6 - SN1702; ConvF(6.52, 6.52, 6.52); Calibrated: 2004-02-17; Electronics: DAE3 Sn519
Phantom: SAM with 835MHz; Type: SAM; Serial: TP-1223
Measurement SW: DASY4, V4.4 Build 3; Postprocessing SW: SEMCAD, V1.8 Build 130

Date: 2004-12-17; Ambient Temp: 23.0; Tissue Temp:22.3

Left Touch, AMPS Ch.363, Ant In, Slide Down, Standard Battery

Area Scan (51x101x1): Measurement grid: dx=15mm, dy=15mm
Zoom Scan (5x5x7)/Cube 0: Measurement grid: dx=8mm, dy=8mm, dz=5mm
Power Drift = -0.1 dB
Peak SAR (extrapolated) = 1.11 W/kg
SAR(1 g) = 0.827 mW/g; SAR(10 g) = 0.591 mW/g

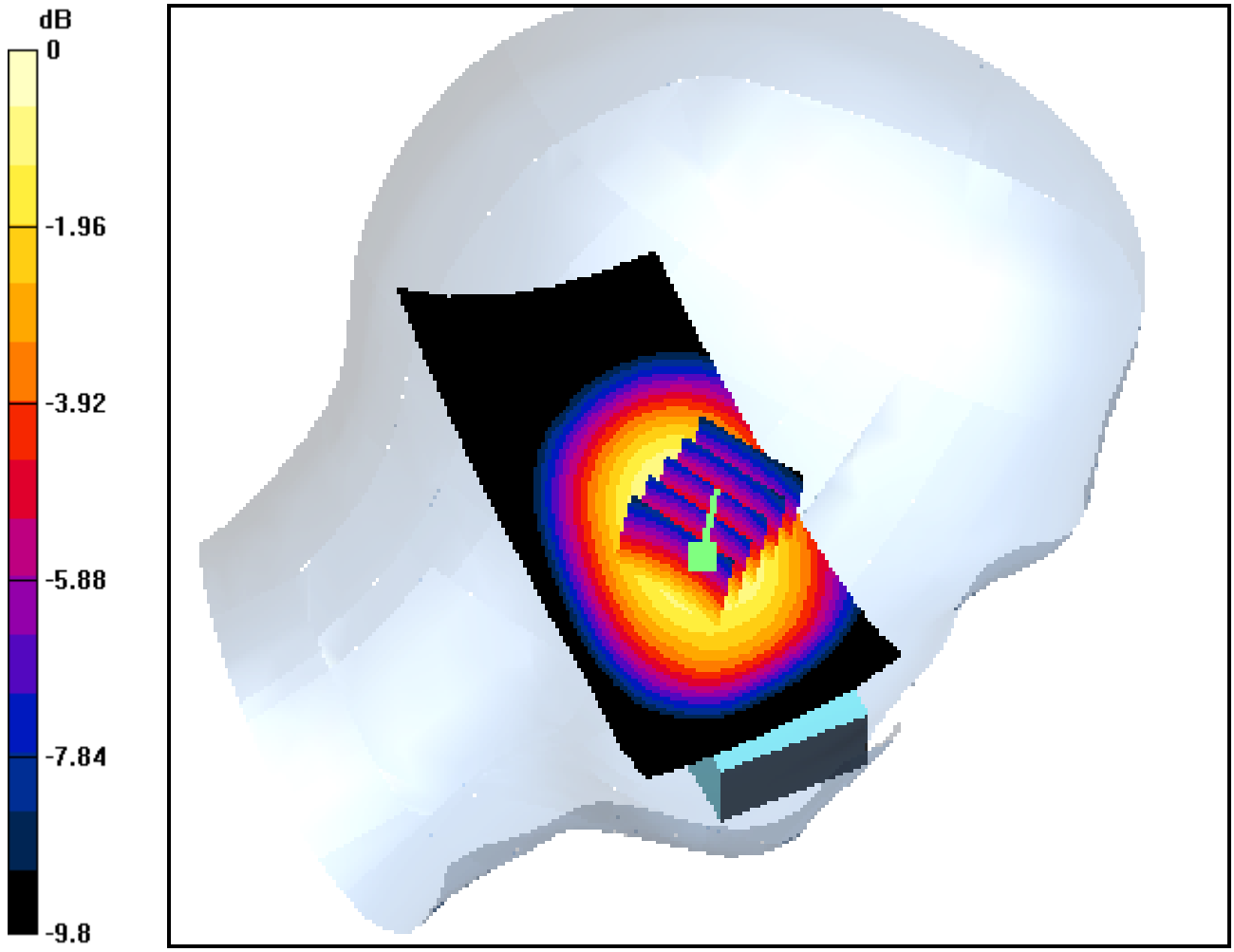

0 dB = 0.875mW/g

DIGITAL EMC CO., LTD

DUT: VK250C_slide up; Type: Tri-mode; Serial: FCC #2

Communication System: FCC AMPS; Frequency: 848.97 MHz;Duty Cycle: 1:1
Medium parameters used (interpolated): f = 848.97 MHz; σ = 0.927 mho/m; ε_r = 42.9; ρ = 1000 kg/m^3
Phantom section: Left Section

DASY4 Configuration:
Probe: ET3DV6 - SN1702; ConvF(6.52, 6.52, 6.52); Calibrated: 2004-02-17; Electronics: DAE3 Sn519
Phantom: SAM with 835MHz; Type: SAM; Serial: TP-1223
Measurement SW: DASY4, V4.4 Build 3; Postprocessing SW: SEMCAD, V1.8 Build 130

Date: 2004-12-17; Ambient Temp: 23.0; Tissue Temp:22.3

Left Touch, AMPS Ch.799, Ant In, Slide Down, Standard Battery

Area Scan (51x101x1): Measurement grid: dx=15mm, dy=15mm
Zoom Scan (5x5x7)/Cube 0: Measurement grid: dx=8mm, dy=8mm, dz=5mm
Power Drift = -0.2 dB
Peak SAR (extrapolated) = 1.01 W/kg
SAR(1 g) = 0.756 mW/g; SAR(10 g) = 0.541 mW/g

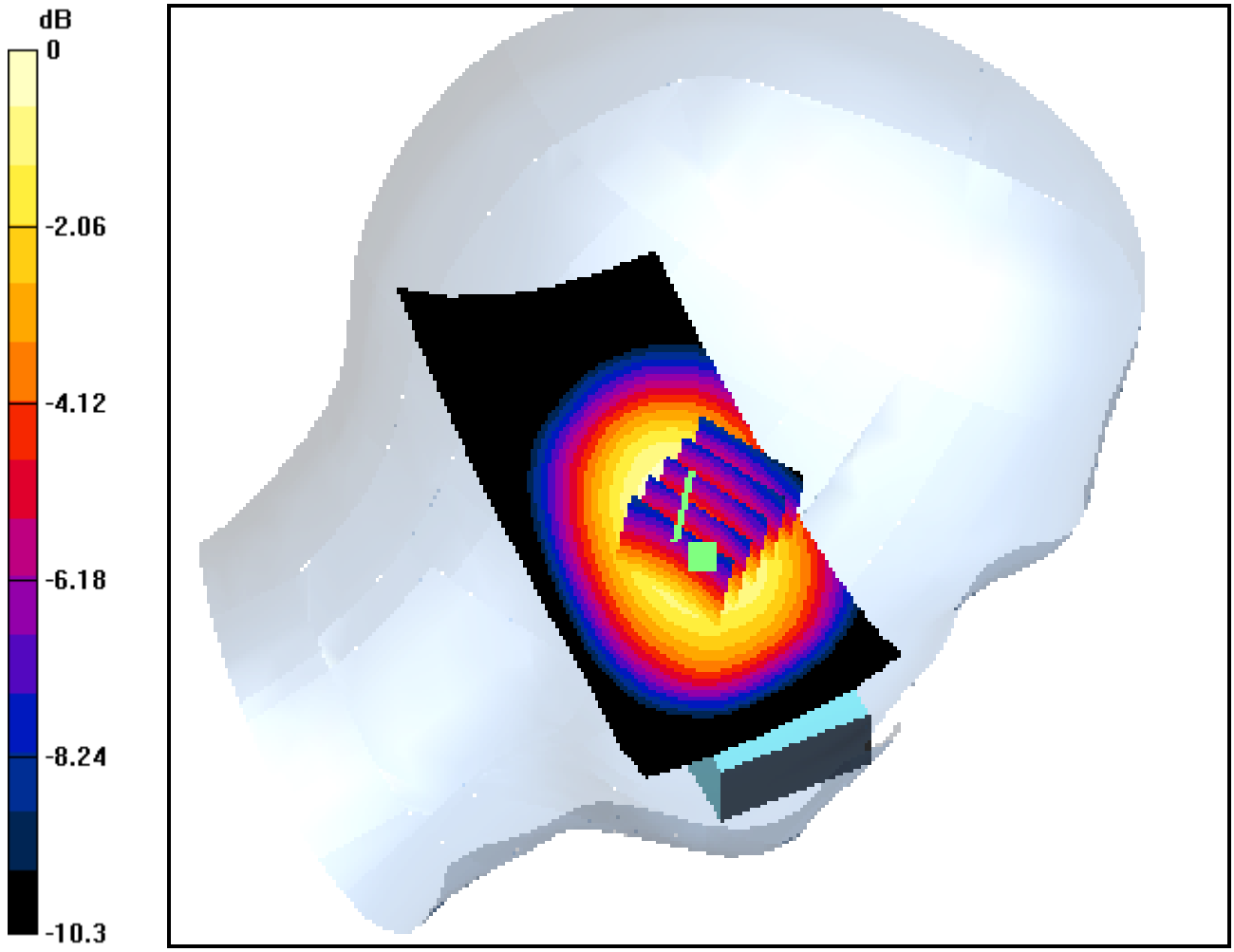

0 dB = 0.788mW/g

DIGITAL EMC CO., LTD

DUT: VK250C_slide up; Type: Tri-mode; Serial: FCC #2

Communication System: FCC AMPS; Frequency: 824.04 MHz;Duty Cycle: 1:1
Medium parameters used (interpolated): f = 824.04 MHz; σ = 0.905 mho/m; ε_r = 43.2; ρ = 1000 kg/m^3
Phantom section: Left Section

DASY4 Configuration:
Probe: ET3DV6 - SN1702; ConvF(6.52, 6.52, 6.52); Calibrated: 2004-02-17; Electronics: DAE3 Sn519
Phantom: SAM with 835MHz; Type: SAM; Serial: TP-1223
Measurement SW: DASY4, V4.4 Build 3; Postprocessing SW: SEMCAD, V1.8 Build 130

Date: 2004-12-17; Ambient Temp: 23.0; Tissue Temp:22.3

Left Tilt, AMPS Ch.991, Ant In, Slide Down, Standard Battery

Area Scan (51x101x1): Measurement grid: dx=15mm, dy=15mm
Zoom Scan (5x5x7)/Cube 0: Measurement grid: dx=8mm, dy=8mm, dz=5mm
Power Drift = -0.2 dB
Peak SAR (extrapolated) = 1.26 W/kg
SAR(1 g) = 0.830 mW/g; SAR(10 g) = 0.542 mW/g

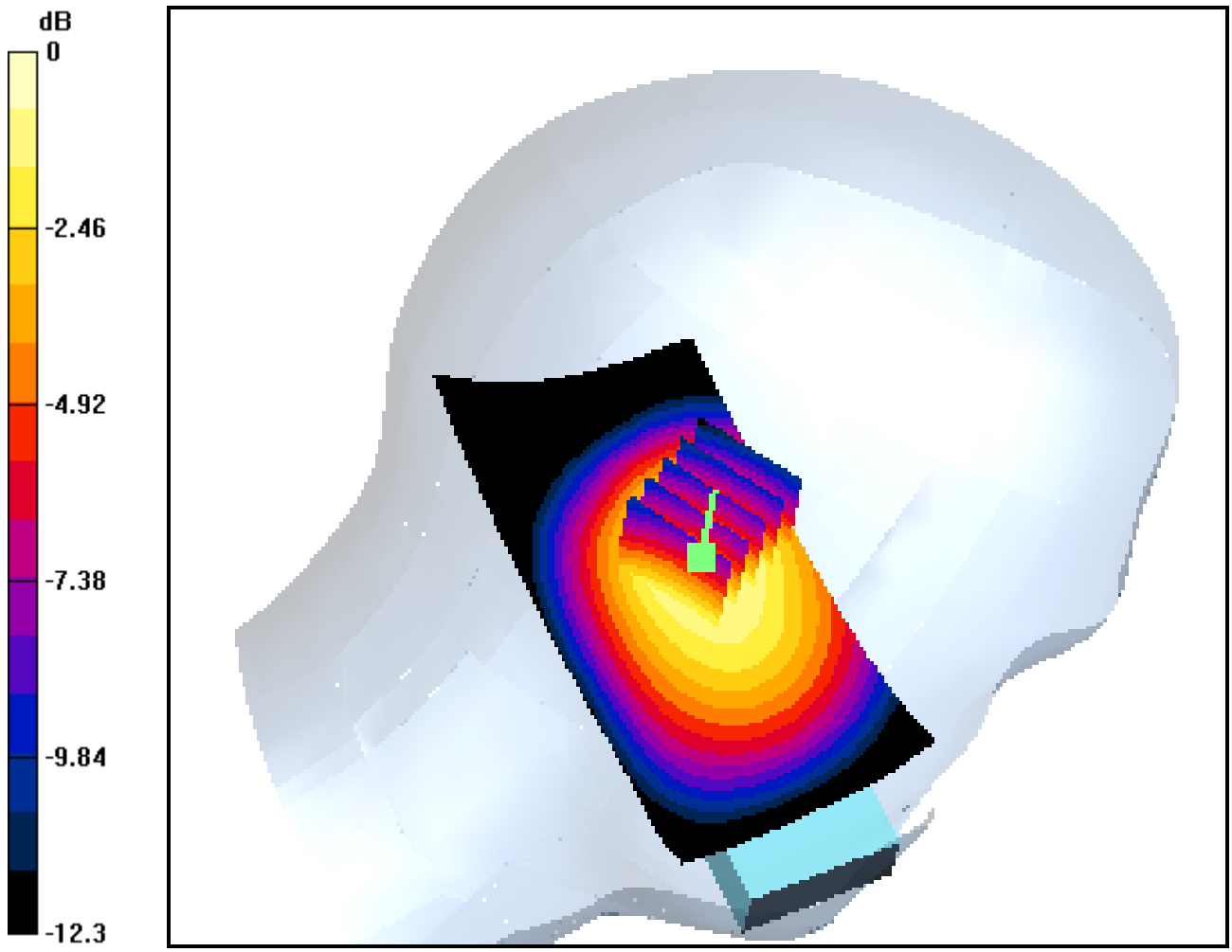

0 dB = 0.901mW/g

DIGITAL EMC CO., LTD

DUT: VK250C_slide up; Type: Tri-mode; Serial: FCC #2

Communication System: FCC AMPS; Frequency: 835.89 MHz;Duty Cycle: 1:1
Medium parameters used (interpolated): f = 835.89 MHz; σ = 0.914 mho/m; ε_r = 43; ρ = 1000 kg/m^3
Phantom section: Left Section

DASY4 Configuration:
Probe: ET3DV6 - SN1702; ConvF(6.52, 6.52, 6.52); Calibrated: 2004-02-17; Electronics: DAE3 Sn519
Phantom: SAM with 835MHz; Type: SAM; Serial: TP-1223
Measurement SW: DASY4, V4.4 Build 3; Postprocessing SW: SEMCAD, V1.8 Build 130

Date: 2004-12-17; Ambient Temp: 23.0; Tissue Temp:22.3

Left Tilt, AMPS Ch.363, Ant In, Slide Down, Standard Battery

Area Scan (51x101x1): Measurement grid: dx=15mm, dy=15mm
Scan (5x5x7)/Cube 0: Measurement grid: dx=8mm, dy=8mm, dz=5mm
Power Drift = -0.0 dB
Peak SAR (extrapolated) = 1.1 W/kg
SAR(1 g) = 0.714 mW/g; SAR(10 g) = 0.463 mW/g

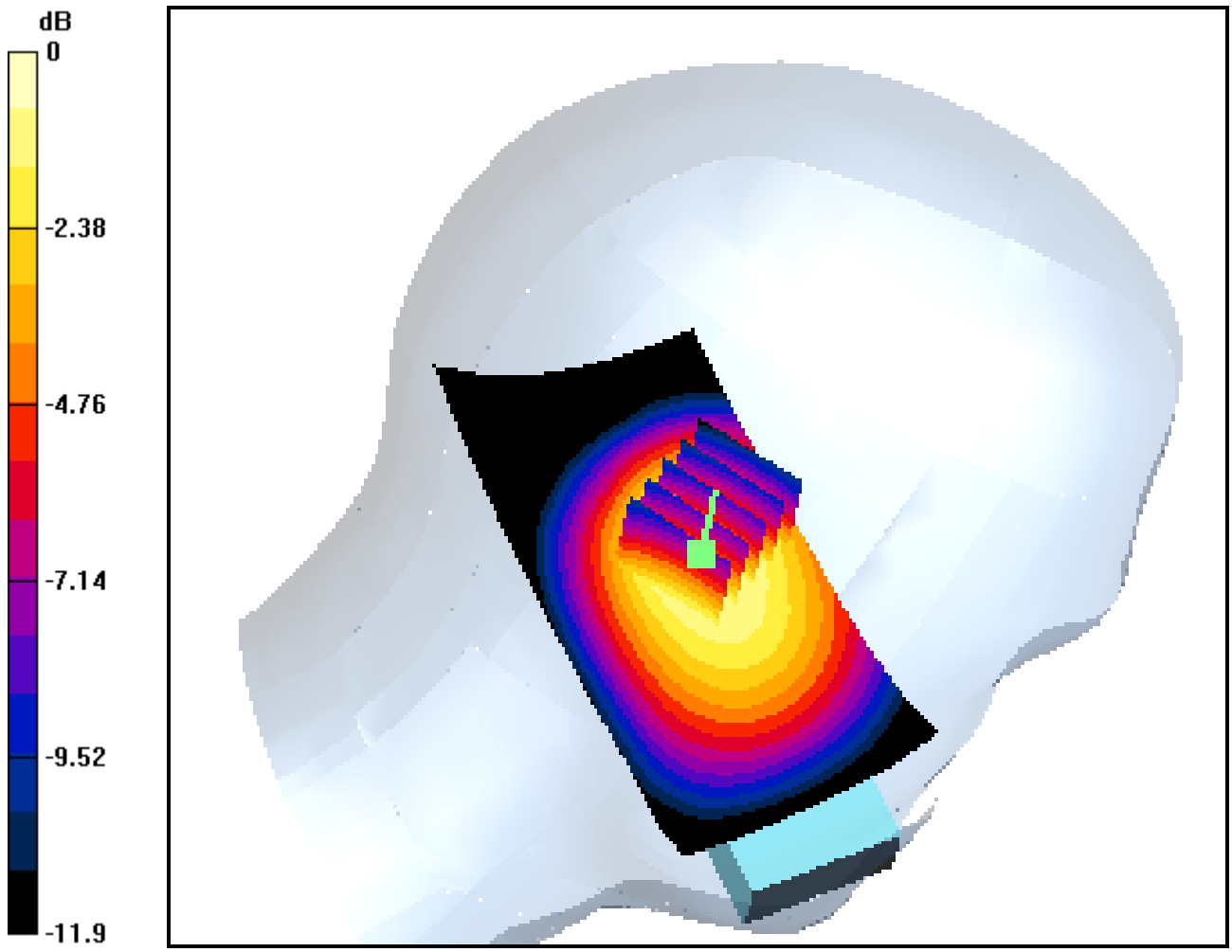

0 dB = 0.750mW/g

DIGITAL EMC CO., LTD

DUT: VK250C_slide up; Type: Tri-mode; Serial: FCC #2

Communication System: FCC AMPS; Frequency: 848.97 MHz;Duty Cycle: 1:1
Medium parameters used (interpolated): f = 848.97 MHz; σ = 0.927 mho/m; ε_r = 42.9; ρ = 1000 kg/m^3
Phantom section: Left Section

DASY4 Configuration:
Probe: ET3DV6 - SN1702; ConvF(6.52, 6.52, 6.52); Calibrated: 2004-02-17; Electronics: DAE3 Sn519
Phantom: SAM with 835MHz; Type: SAM; Serial: TP-1223
Measurement SW: DASY4, V4.4 Build 3; Postprocessing SW: SEMCAD, V1.8 Build 130

Date: 2004-12-17; Ambient Temp: 23.0; Tissue Temp:22.3

Left Tilt, AMPS Ch.799, Ant In, Slide Down, Standard Battery

Area Scan (51x101x1): Measurement grid: dx=15mm, dy=15mm
Zoom Scan (5x5x7)/Cube 0: Measurement grid: dx=8mm, dy=8mm, dz=5mm
Power Drift = -0.1 dB
Peak SAR (extrapolated) = 0.966 W/kg
SAR(1 g) = 0.637 mW/g; SAR(10 g) = 0.414 mW/g

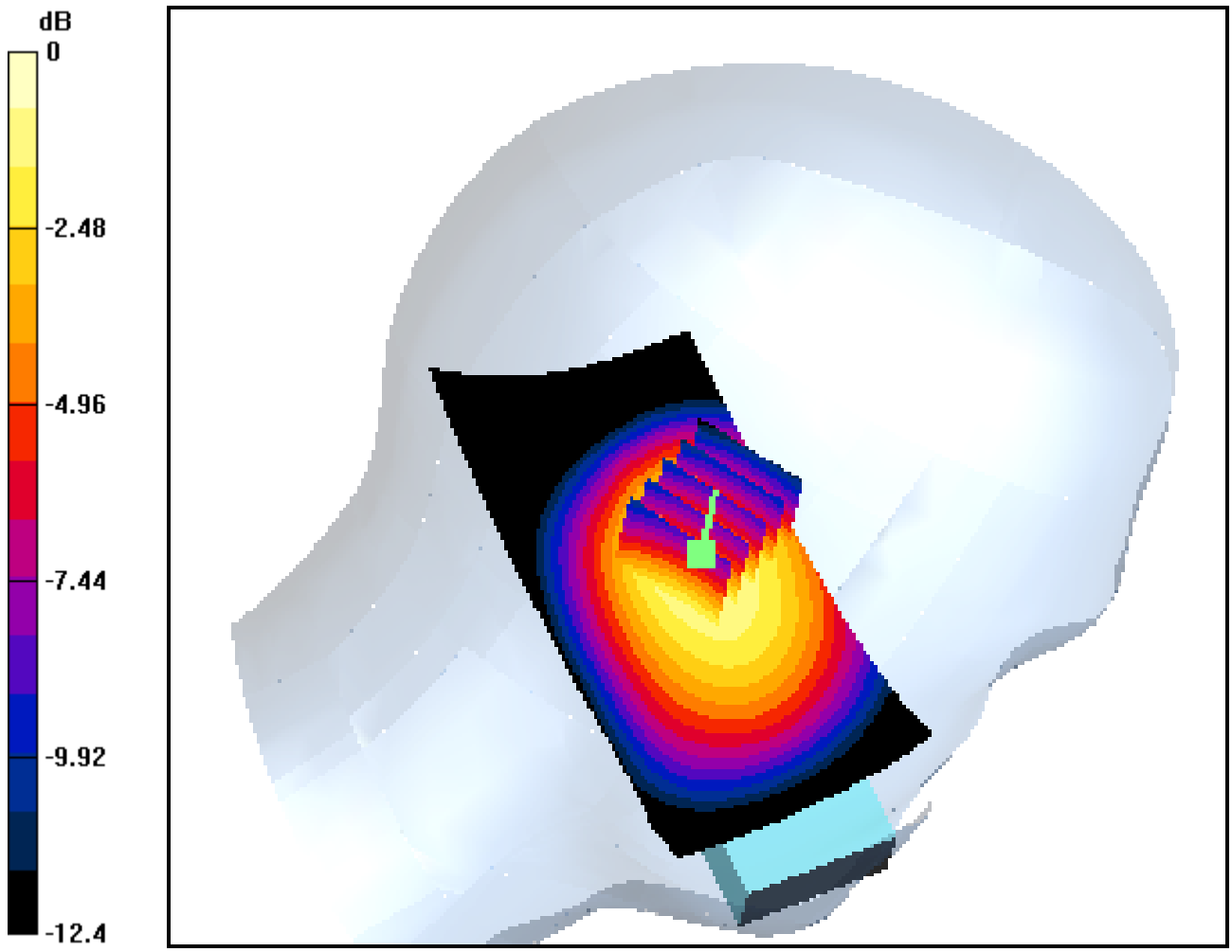

0 dB = 0.688mW/g

DIGITAL EMC CO., LTD

DUT: VK250C; Type: Tri-mode; Serial: FCC #2

Communication System: FCC AMPS; Frequency: 824.04 MHz;Duty Cycle: 1:1
Medium parameters used (interpolated): f = 824.04 MHz; σ = 0.905 mho/m; ε_r = 43.2; ρ = 1000 kg/m^3
Phantom section: Right Section

DASY4 Configuration:
Probe: ET3DV6 - SN1702; ConvF(6.52, 6.52, 6.52); Calibrated: 2004-02-17; Electronics: DAE3 Sn519
Phantom: SAM with 835MHz; Type: SAM; Serial: TP-1223
Measurement SW: DASY4, V4.4 Build 3; Postprocessing SW: SEMCAD, V1.8 Build 130

Date: 2004-12-16; Ambient Temp: 23.0; Tissue Temp:22.5

Right Touch, AMPS Ch.991, Ant Out, Slide Down, Standard Battery

Area Scan (51x121x1): Measurement grid: dx=15mm, dy=15mm
Zoom Scan (5x5x7)/Cube 0: Measurement grid: dx=8mm, dy=8mm, dz=5mm
Power Drift = -0.1 dB
Peak SAR (extrapolated) = 1.69 W/kg
SAR(1 g) = 1.3 mW/g; SAR(10 g) = 0.932 mW/g

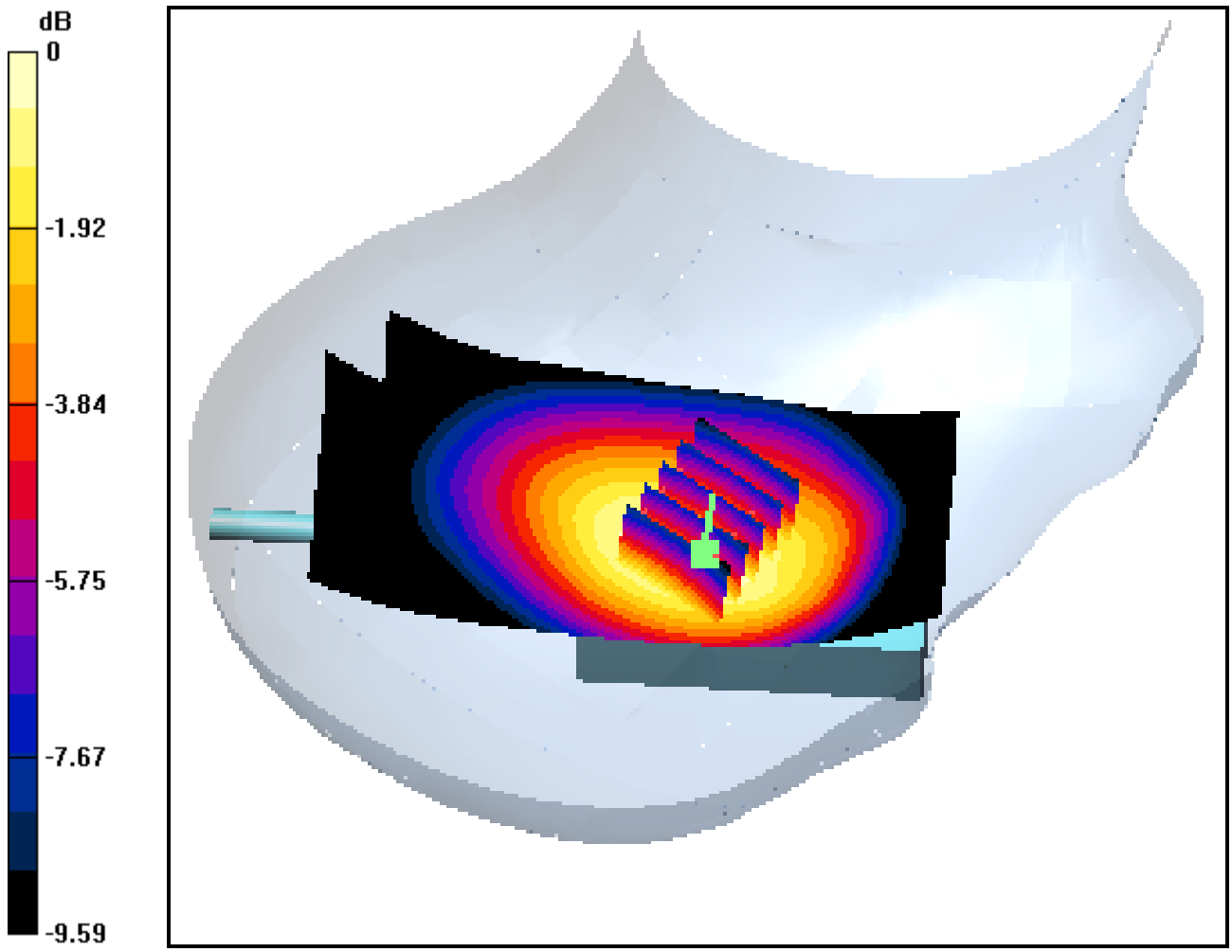

0 dB = 1.37mW/g

DIGITAL EMC CO., LTD

DUT: VK250C; Type: Tri-mode; Serial: FCC #2

Communication System: FCC AMPS; Frequency: 835.89 MHz;Duty Cycle: 1:1
Medium parameters used (interpolated): f = 835.89 MHz; σ = 0.914 mho/m; ε_r = 43; ρ = 1000 kg/m^3
Phantom section: Right Section

DASY4 Configuration:
Probe: ET3DV6 - SN1702; ConvF(6.52, 6.52, 6.52); Calibrated: 2004-02-17; Electronics: DAE3 Sn519
Phantom: SAM with 835MHz; Type: SAM; Serial: TP-1223
Measurement SW: DASY4, V4.4 Build 3; Postprocessing SW: SEMCAD, V1.8 Build 130

Date: 2004-12-16; Ambient Temp: 23.0; Tissue Temp:22.5

Right Touch, AMPS Ch.363, Ant Out, Slide Down, Standard Battery

Area Scan (51x121x1): Measurement grid: dx=15mm, dy=15mm
Zoom Scan (5x5x7)/Cube 0: Measurement grid: dx=8mm, dy=8mm, dz=5mm
Power Drift = -0.1 dB
Peak SAR (extrapolated) = 1.43 W/kg
SAR(1 g) = 1.1 mW/g; SAR(10 g) = 0.791 mW/g

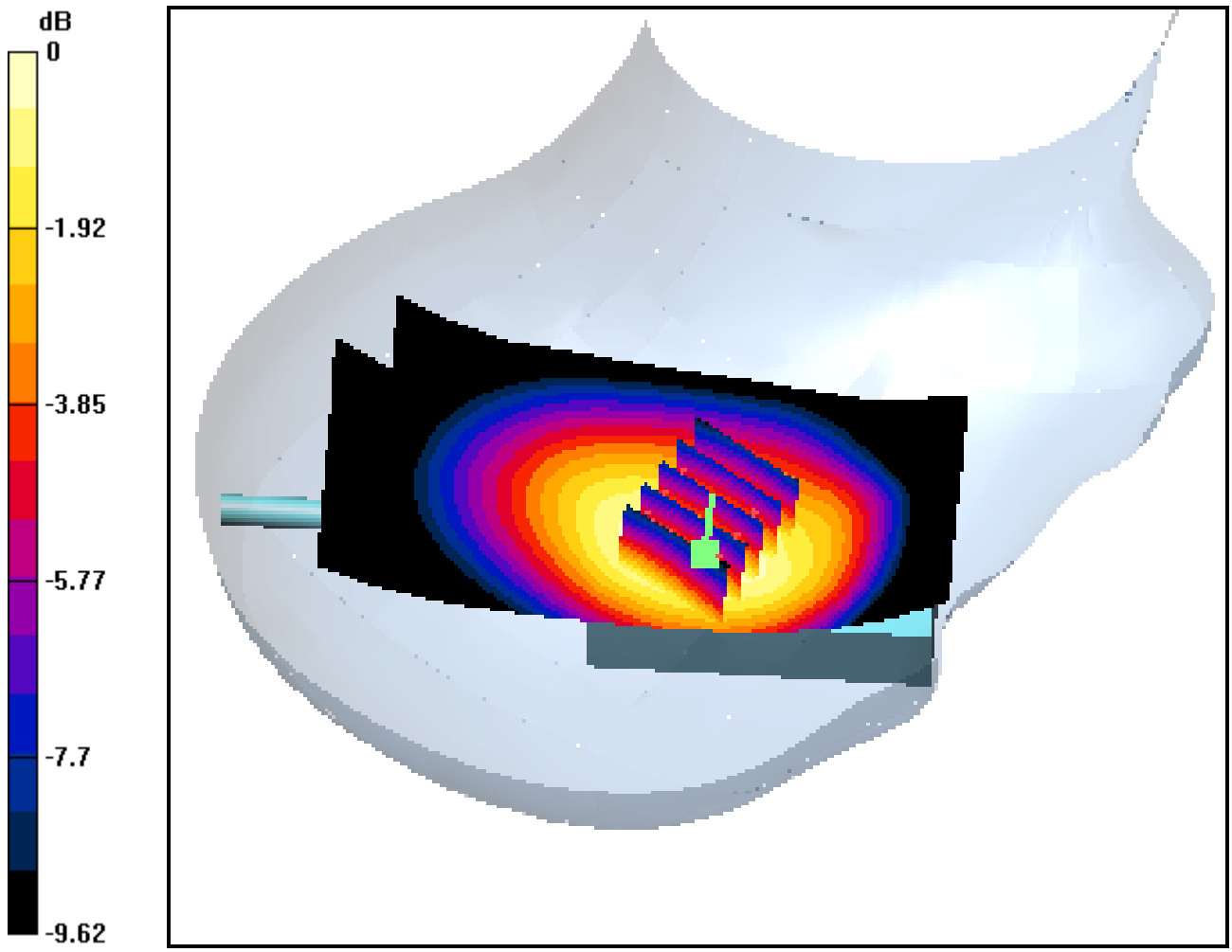

0 dB = 1.16mW/g

DIGITAL EMC CO., LTD

DUT: VK250C; Type: Tri-mode; Serial: FCC #2

Communication System: FCC AMPS; Frequency: 848.97 MHz;Duty Cycle: 1:1
Medium parameters used (interpolated): f = 848.97 MHz; σ = 0.927 mho/m; ε_r = 42.9; ρ = 1000 kg/m^3
Phantom section: Right Section

DASY4 Configuration:
Probe: ET3DV6 - SN1702; ConvF(6.52, 6.52, 6.52); Calibrated: 2004-02-17; Electronics: DAE3 Sn519
Phantom: SAM with 835MHz; Type: SAM; Serial: TP-1223
Measurement SW: DASY4, V4.4 Build 3; Postprocessing SW: SEMCAD, V1.8 Build 130

Date: 2004-12-16; Ambient Temp: 23.0; Tissue Temp:22.5

Right Touch, AMPS Ch.799, Ant Out, Slide Down, Standard Battery

Area Scan (51x121x1): Measurement grid: dx=15mm, dy=15mm
Zoom Scan (5x5x7)/Cube 0: Measurement grid: dx=8mm, dy=8mm, dz=5mm
Power Drift = -0.1 dB
Peak SAR (extrapolated) = 1.18 W/kg
SAR(1 g) = 0.909 mW/g; SAR(10 g) = 0.650 mW/g

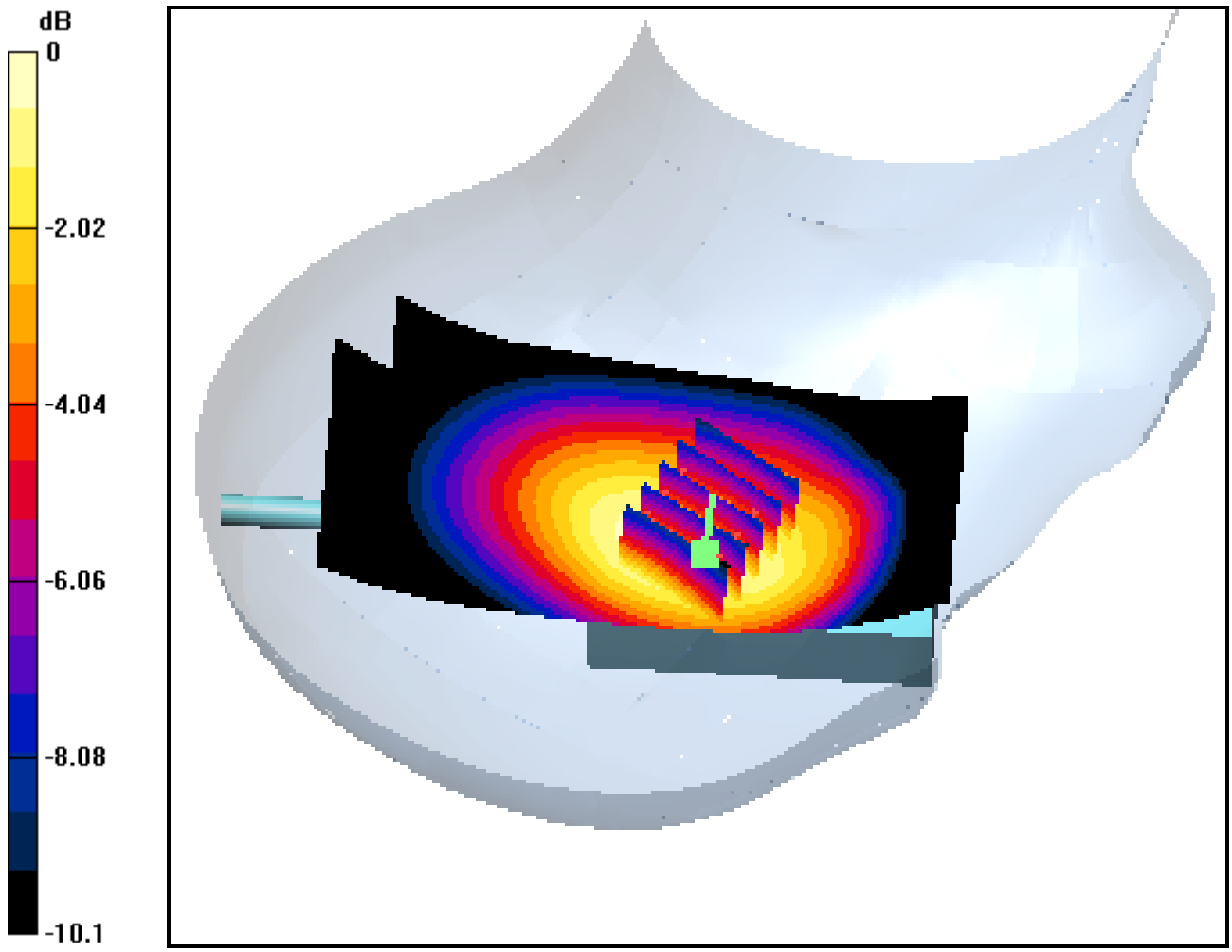

0 dB = 0.959mW/g

DIGITAL EMC CO., LTD

DUT: VK250C; Type: Tri-mode; Serial: FCC #2

Communication System: FCC AMPS; Frequency: 848.97 MHz;Duty Cycle: 1:1
Medium parameters used (interpolated): f = 848.97 MHz; σ = 0.927 mho/m; ε_r = 42.9; ρ = 1000 kg/m^3
Phantom section: Right Section

DASY4 Configuration:
Probe: ET3DV6 - SN1702; ConvF(6.52, 6.52, 6.52); Calibrated: 2004-02-17; Electronics: DAE3 Sn519
Phantom: SAM with 835MHz; Type: SAM; Serial: TP-1223
Measurement SW: DASY4, V4.4 Build 3; Postprocessing SW: SEMCAD, V1.8 Build 130

Date: 2004-12-16; Ambient Temp: 23.0; Tissue Temp:22.5

Right Tilt, AMPS Ch.991, Ant Out, Slide Down, Standard Battery

Area Scan (51x121x1): Measurement grid: dx=15mm, dy=15mm
Zoom Scan (5x5x7)/Cube 0: Measurement grid: dx=8mm, dy=8mm, dz=5mm
Power Drift = -0.1 dB
Peak SAR (extrapolated) = 1.62 W/kg
SAR(1 g) = 1.14 mW/g; SAR(10 g) = 0.776 mW/g

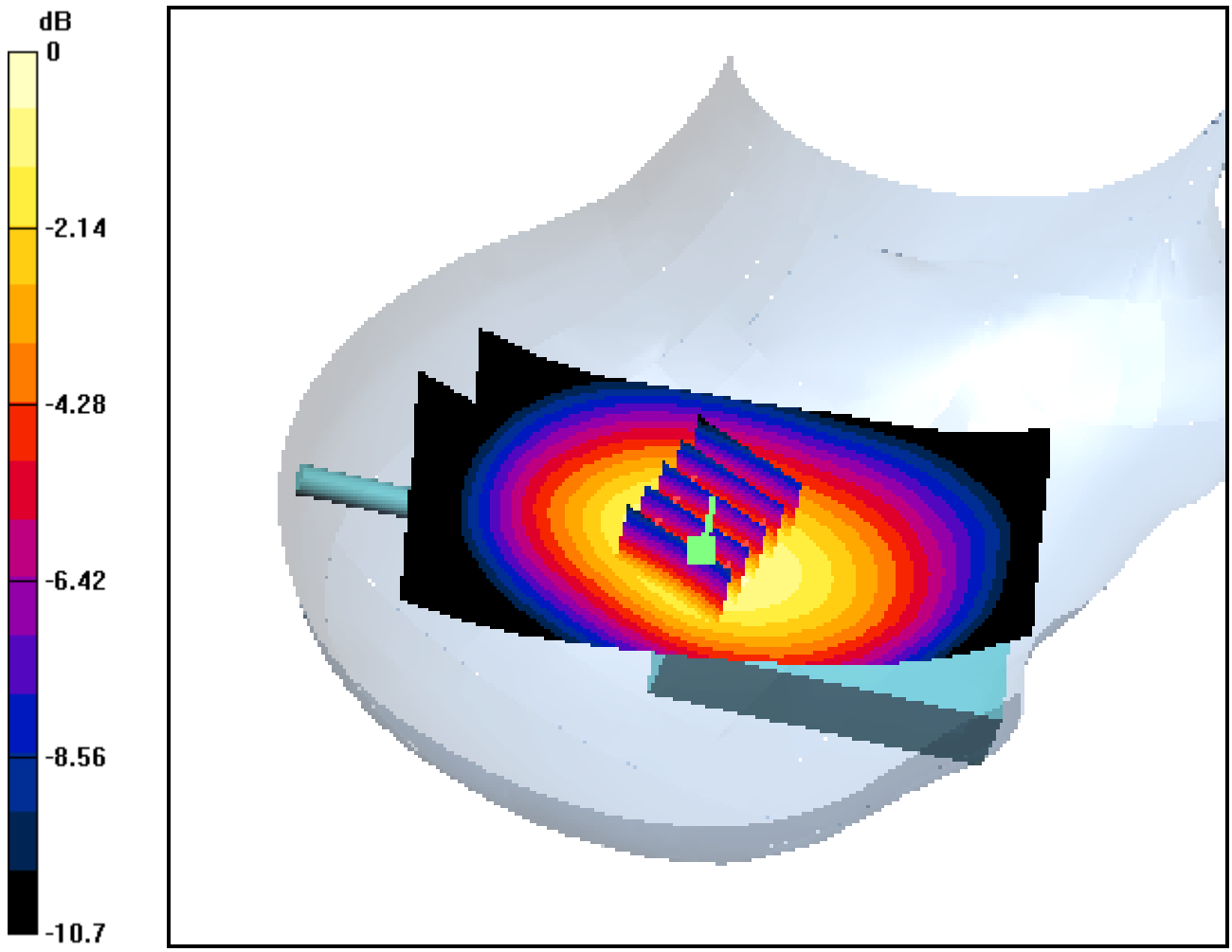

0 dB = 1.22mW/g

DIGITAL EMC CO., LTD

DUT: VK250C; Type: Tri-mode; Serial: FCC #2

Communication System: FCC AMPS; Frequency: 835.89 MHz;Duty Cycle: 1:1
Medium parameters used (interpolated): f = 835.89 MHz; σ = 0.914 mho/m; ε_r = 43; ρ = 1000 kg/m^3
Phantom section: Right Section

DASY4 Configuration:
Probe: ET3DV6 - SN1702; ConvF(6.52, 6.52, 6.52); Calibrated: 2004-02-17; Electronics: DAE3 Sn519
Phantom: SAM with 835MHz; Type: SAM; Serial: TP-1223
Measurement SW: DASY4, V4.4 Build 3; Postprocessing SW: SEMCAD, V1.8 Build 130

Date: 2004-12-16; Ambient Temp: 23.0; Tissue Temp:22.5

Right Tilt, AMPS Ch.363, Ant Out, Slide Down, Standard Battery

Area Scan (51x121x1): Measurement grid: dx=15mm, dy=15mm
Zoom Scan (5x5x7)/Cube 0: Measurement grid: dx=8mm, dy=8mm, dz=5mm
Power Drift = -0.3 dB
Peak SAR (extrapolated) = 1.2 W/kg
SAR(1 g) = 0.841 mW/g; SAR(10 g) = 0.570 mW/g

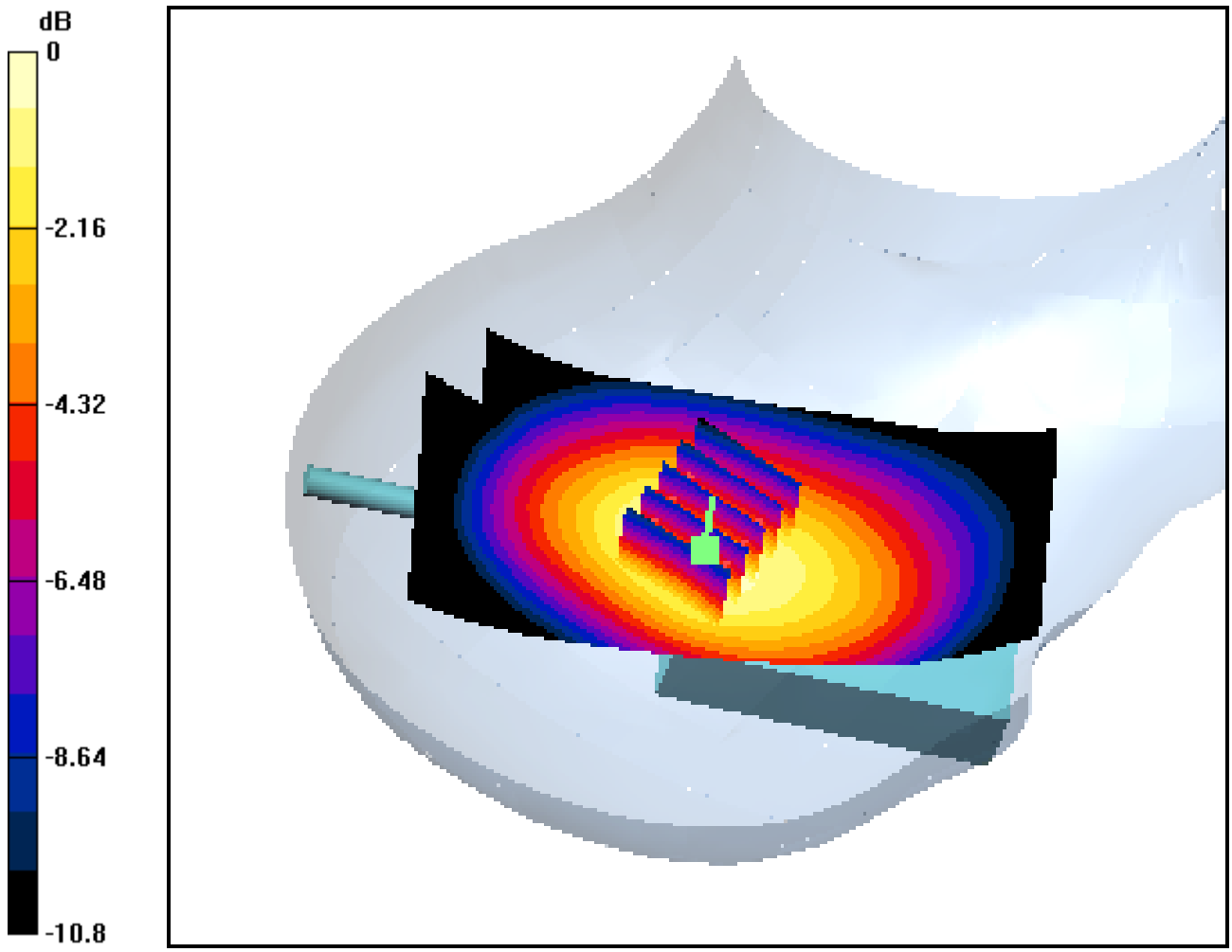

0 dB = 0.898mW/g

DIGITAL EMC CO., LTD

DUT: VK250C; Type: Tri-mode; Serial: FCC #2

Communication System: FCC AMPS; Frequency: 848.97 MHz;Duty Cycle: 1:1
Medium parameters used (interpolated): f = 848.97 MHz; σ = 0.927 mho/m; ε_r = 42.9; ρ = 1000 kg/m^3
Phantom section: Right Section

DASY4 Configuration:
Probe: ET3DV6 - SN1702; ConvF(6.52, 6.52, 6.52); Calibrated: 2004-02-17; Electronics: DAE3 Sn519
Phantom: SAM with 835MHz; Type: SAM; Serial: TP-1223
Measurement SW: DASY4, V4.4 Build 3; Postprocessing SW: SEMCAD, V1.8 Build 130

Date: 2004-12-16; Ambient Temp: 23.0; Tissue Temp:22.5

Right Tilt, AMPS Ch.799, Ant Out, Slide Down, Standard Battery

Area Scan (51x121x1): Measurement grid: dx=15mm, dy=15mm
Zoom Scan (5x5x7)/Cube 0: Measurement grid: dx=8mm, dy=8mm, dz=5mm
Power Drift = -0.2 dB
Peak SAR (extrapolated) = 0.981 W/kg
SAR(1 g) = 0.695 mW/g; SAR(10 g) = 0.471 mW/g

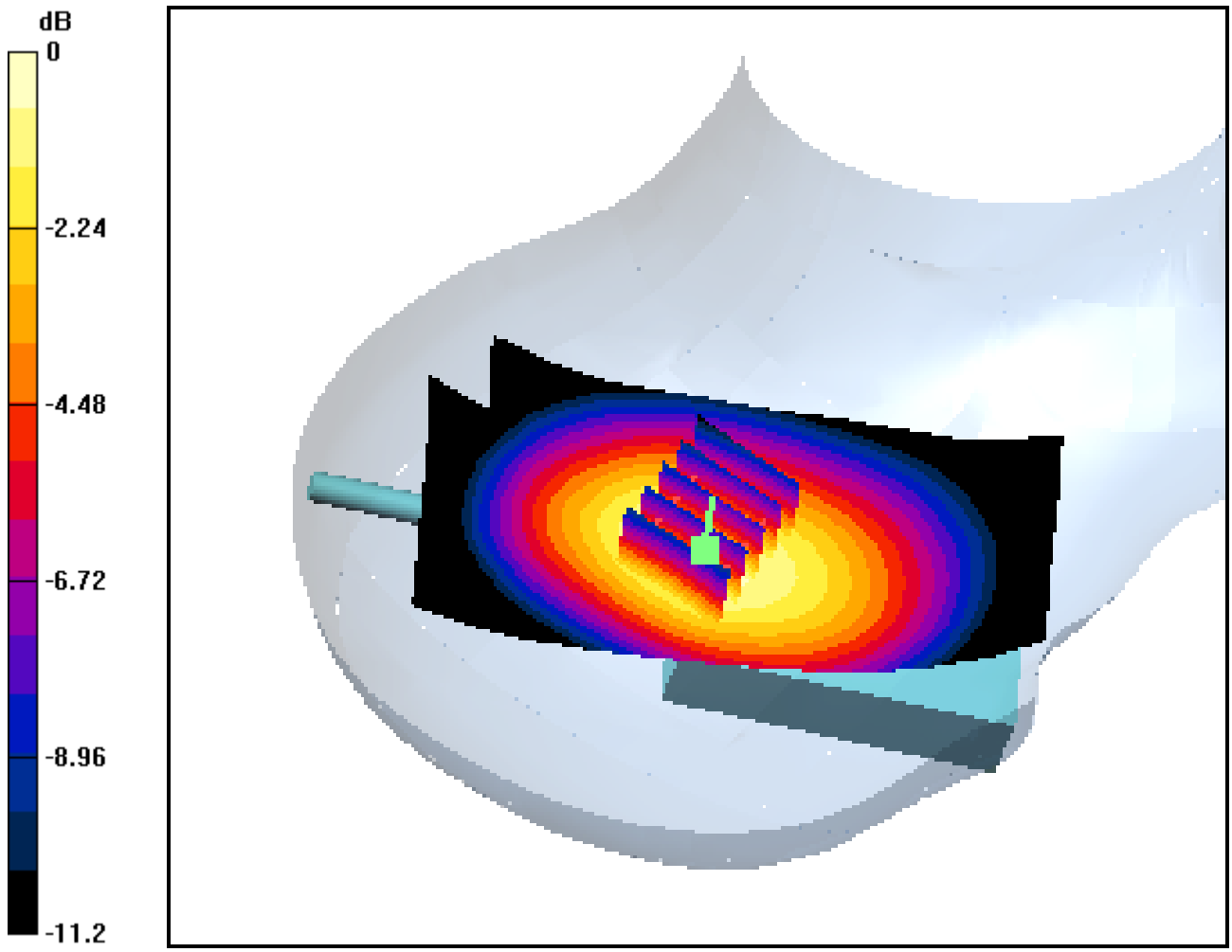

0 dB = 0.747mW/g

DIGITAL EMC CO., LTD

DUT: VK250C; Type: Tri-mode; Serial: FCC #2

Communication System: FCC AMPS; Frequency: 824.04 MHz;Duty Cycle: 1:1
Medium parameters used (interpolated): f = 824.04 MHz; σ = 0.905 mho/m; ε_r = 43.2; ρ = 1000 kg/m^3
Phantom section: Left Section

DASY4 Configuration:
Probe: ET3DV6 - SN1702; ConvF(6.52, 6.52, 6.52); Calibrated: 2004-02-17; Electronics: DAE3 Sn519
Phantom: SAM with 835MHz; Type: SAM; Serial: TP-1223
Measurement SW: DASY4, V4.4 Build 3; Postprocessing SW: SEMCAD, V1.8 Build 130

Date: 2004-12-16; Ambient Temp: 23.0; Tissue Temp:22.3

Left Touch, AMPS Ch.991, Ant Out, Slide Down, Standard Battery

Area Scan (41x121x1): Measurement grid: dx=15mm, dy=15mm
Zoom Scan (5x5x7)/Cube 0: Measurement grid: dx=8mm, dy=8mm, dz=5mm
Power Drift = -0.2 dB
Peak SAR (extrapolated) = 1.85 W/kg
SAR(1 g) = 1.39 mW/g; SAR(10 g) = 1 mW/g

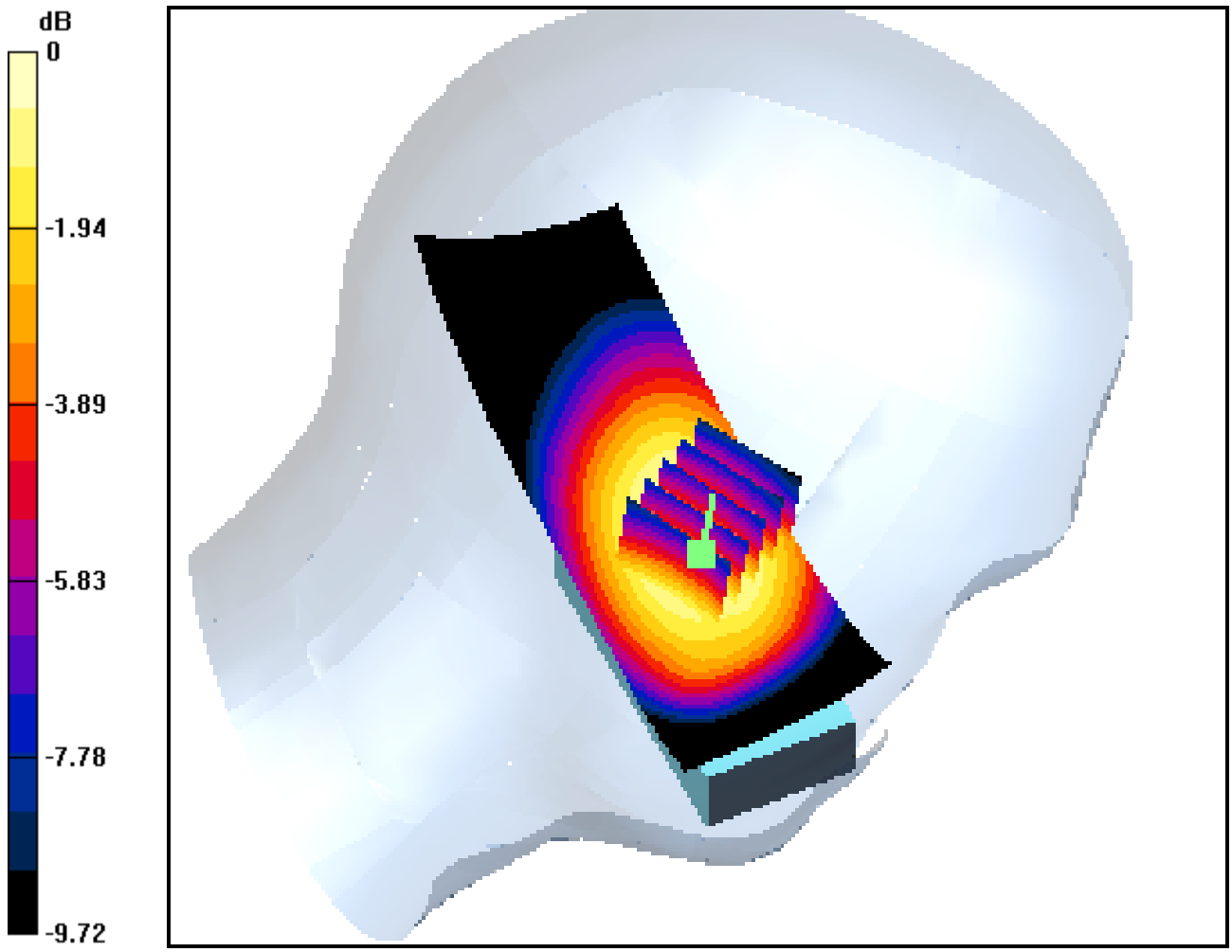

0 dB = 1.47mW/g

DIGITAL EMC CO., LTD

DUT: VK250C; Type: Tri-mode; Serial: FCC #2

Communication System: FCC AMPS; Frequency: 835.89 MHz;Duty Cycle: 1:1
Medium parameters used (interpolated): f = 835.89 MHz; σ = 0.914 mho/m; ε_r = 43; ρ = 1000 kg/m^3
Phantom section: Left Section

DASY4 Configuration:
Probe: ET3DV6 - SN1702; ConvF(6.52, 6.52, 6.52); Calibrated: 2004-02-17; Electronics: DAE3 Sn519
Phantom: SAM with 835MHz; Type: SAM; Serial: TP-1223
Measurement SW: DASY4, V4.4 Build 3; Postprocessing SW: SEMCAD, V1.8 Build 130

Date: 2004-12-16; Ambient Temp: 23.0; Tissue Temp:22.3

Left Touch, AMPS Ch.363, Ant Out, Slide Down, Standard Battery

Area Scan (41x121x1): Measurement grid: dx=15mm, dy=15mm
Zoom Scan (5x5x7)/Cube 0: Measurement grid: dx=8mm, dy=8mm, dz=5mm
Power Drift = -0.1 dB
Peak SAR (extrapolated) = 1.52 W/kg
SAR(1 g) = 1.14 mW/g; SAR(10 g) = 0.813 mW/g

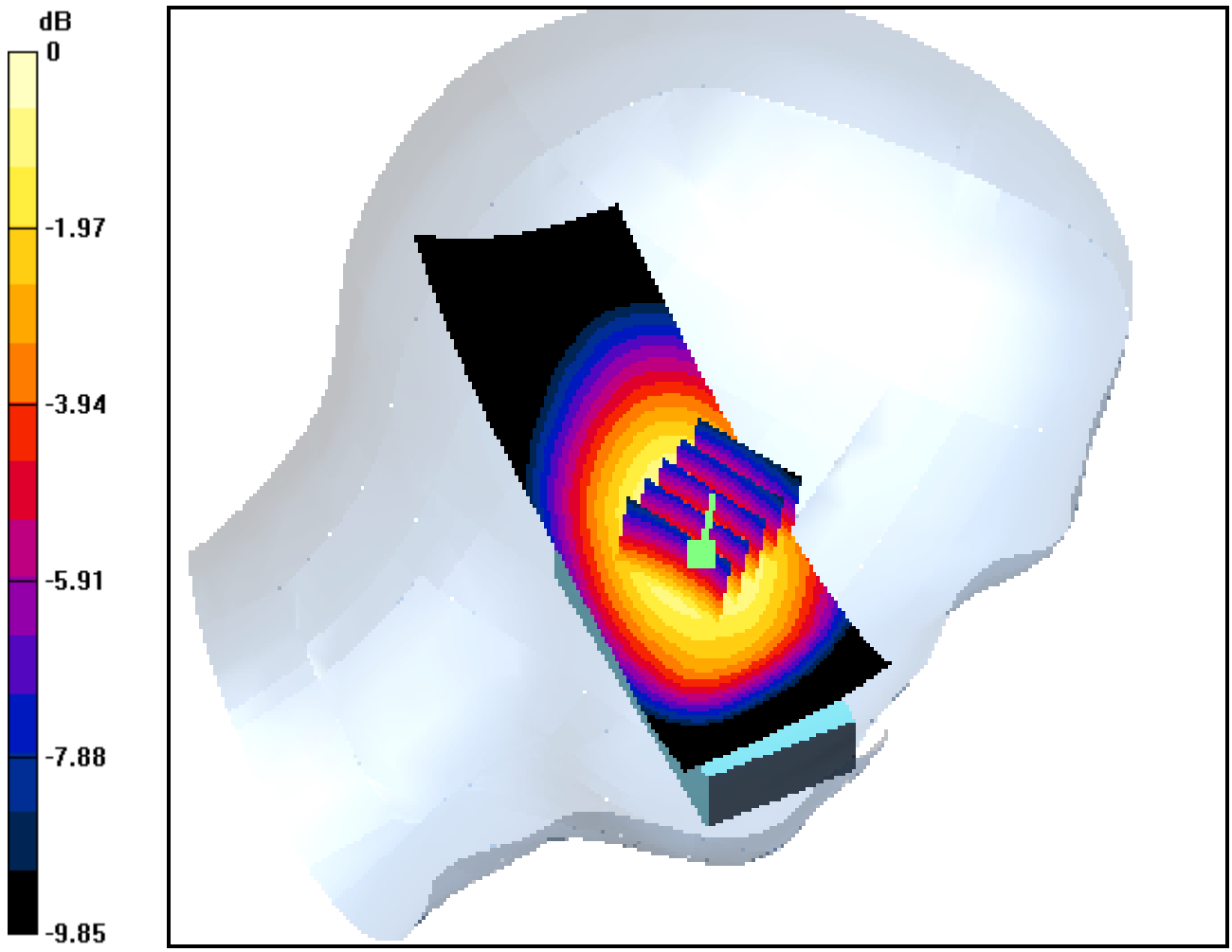

0 dB = 1.21mW/g

DIGITAL EMC CO., LTD

DUT: VK250C; Type: Tri-mode; Serial: FCC #2

Communication System: FCC AMPS; Frequency: 848.97 MHz;Duty Cycle: 1:1
Medium parameters used (interpolated): f = 848.97 MHz; σ = 0.927 mho/m; ε_r = 42.9; ρ = 1000 kg/m^3
Phantom section: Left Section

DASY4 Configuration:
Probe: ET3DV6 - SN1702; ConvF(6.52, 6.52, 6.52); Calibrated: 2004-02-17; Electronics: DAE3 Sn519
Phantom: SAM with 835MHz; Type: SAM; Serial: TP-1223
Measurement SW: DASY4, V4.4 Build 3; Postprocessing SW: SEMCAD, V1.8 Build 130

Date: 2004-12-16; Ambient Temp: 23.0; Tissue Temp:22.3

Left Touch, AMPS Ch.799, Ant Out, Slide Down, Standard Battery

Area Scan (41x121x1): Measurement grid: dx=15mm, dy=15mm
Zoom Scan (5x5x7)/Cube 0: Measurement grid: dx=8mm, dy=8mm, dz=5mm
Power Drift = -0.0 dB
Peak SAR (extrapolated) = 1.28 W/kg
SAR(1 g) = 0.952 mW/g; SAR(10 g) = 0.679 mW/g

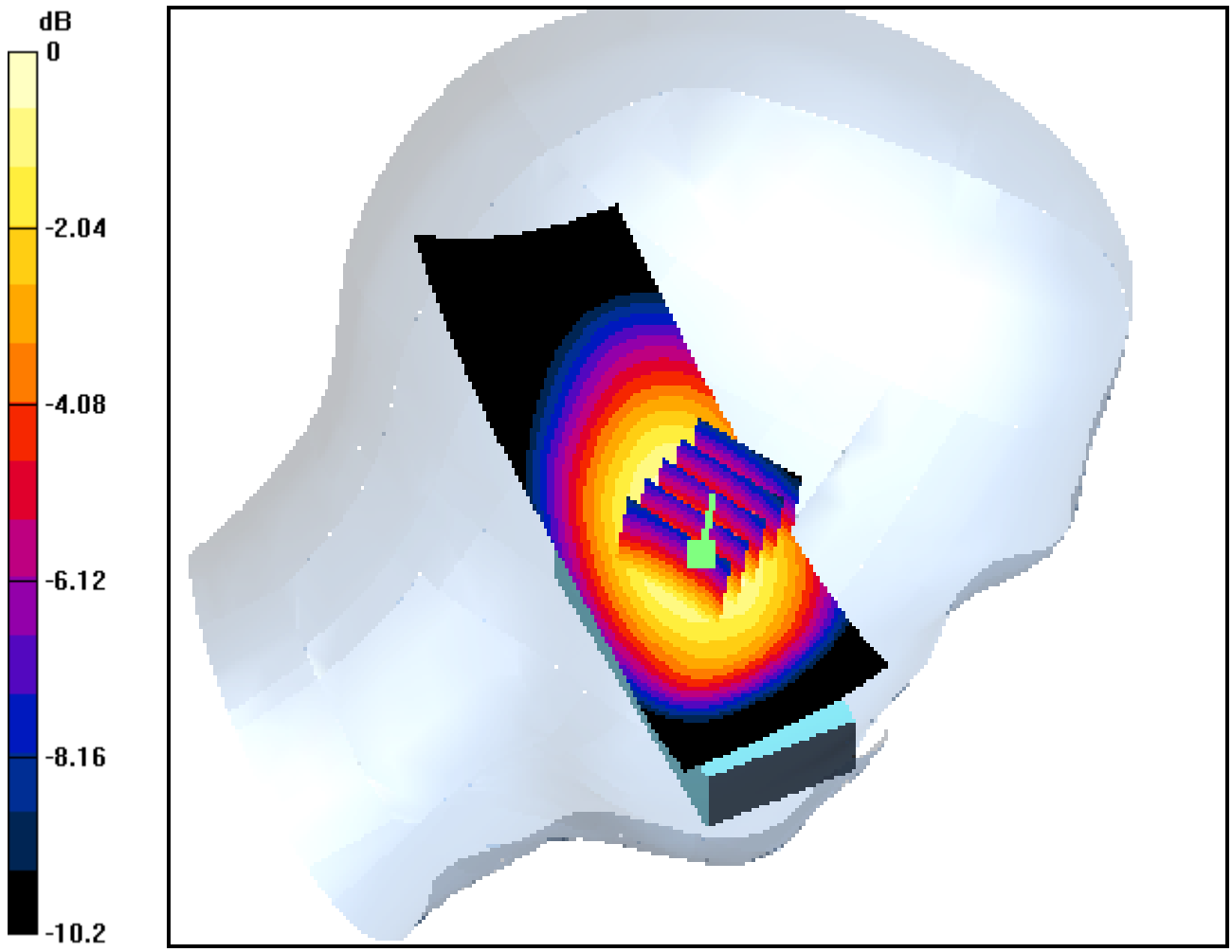

0 dB = 1.01mW/g

DIGITAL EMC CO., LTD

DUT: VK250C; Type: Tri-mode; Serial: FCC #2

Communication System: FCC AMPS; Frequency: 824.04 MHz;Duty Cycle: 1:1
Medium parameters used (interpolated): f = 824.04 MHz; σ = 0.905 mho/m; ε_r = 43.2; ρ = 1000 kg/m^3
Phantom section: Left Section

DASY4 Configuration:
Probe: ET3DV6 - SN1702; ConvF(6.52, 6.52, 6.52); Calibrated: 2004-02-17; Electronics: DAE3 Sn519
Phantom: SAM with 835MHz; Type: SAM; Serial: TP-1223
Measurement SW: DASY4, V4.4 Build 3; Postprocessing SW: SEMCAD, V1.8 Build 130

Date: 2004-12-16; Ambient Temp: 23.0; Tissue Temp:22.3

Left Tilt, AMPS Ch.991, Ant Out, Slide Down, Standard Battery

Area Scan (41x121x1): Measurement grid: dx=15mm, dy=15mm
Zoom Scan (5x5x7)/Cube 0: Measurement grid: dx=8mm, dy=8mm, dz=5mm
Power Drift = -0.1 dB
Peak SAR (extrapolated) = 1.77 W/kg
SAR(1 g) = 1.18 mW/g; SAR(10 g) = 0.772 mW/g

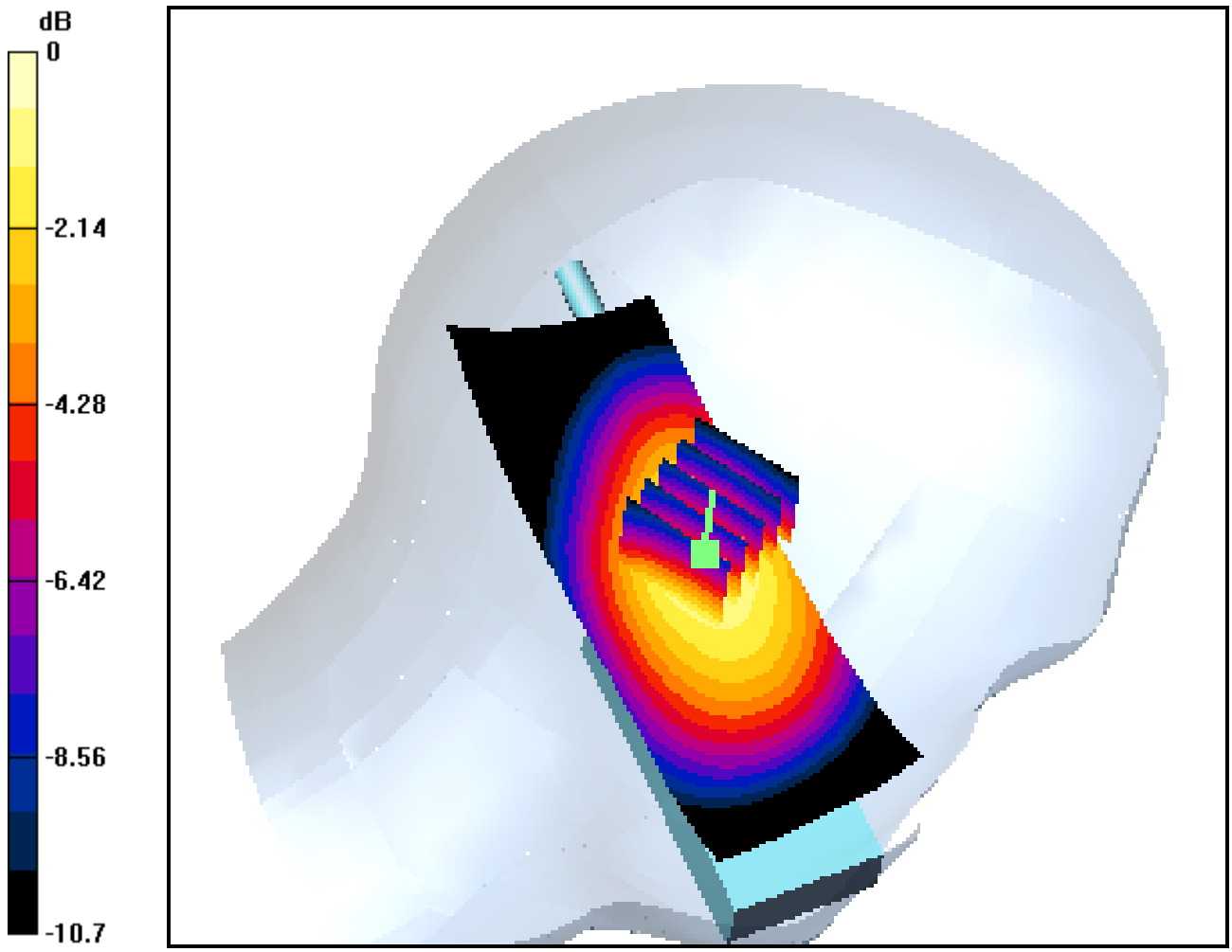

0 dB = 1.3mW/g

DIGITAL EMC CO., LTD

DUT: VK250C; Type: Tri-mode; Serial: FCC #2

Communication System: FCC AMPS; Frequency: 835.89 MHz;Duty Cycle: 1:1
Medium parameters used (interpolated): f = 835.89 MHz; σ = 0.914 mho/m; ε_r = 43; ρ = 1000 kg/m^3
Phantom section: Left Section

DASY4 Configuration:
Probe: ET3DV6 - SN1702; ConvF(6.52, 6.52, 6.52); Calibrated: 2004-02-17; Electronics: DAE3 Sn519
Phantom: SAM with 835MHz; Type: SAM; Serial: TP-1223
Measurement SW: DASY4, V4.4 Build 3; Postprocessing SW: SEMCAD, V1.8 Build 130

Date: 2004-12-16; Ambient Temp: 23.0; Tissue Temp:22.3

Left Tilt, AMPS Ch.363, Ant Out, Slide Down, Standard Battery

Area Scan (51x121x1): Measurement grid: dx=15mm, dy=15mm
Zoom Scan (5x5x7)/Cube 0: Measurement grid: dx=8mm, dy=8mm, dz=5mm
Power Drift = -0.2 dB
Peak SAR (extrapolated) = 1.49 W/kg
SAR(1 g) = 0.979 mW/g; SAR(10 g) = 0.638 mW/g

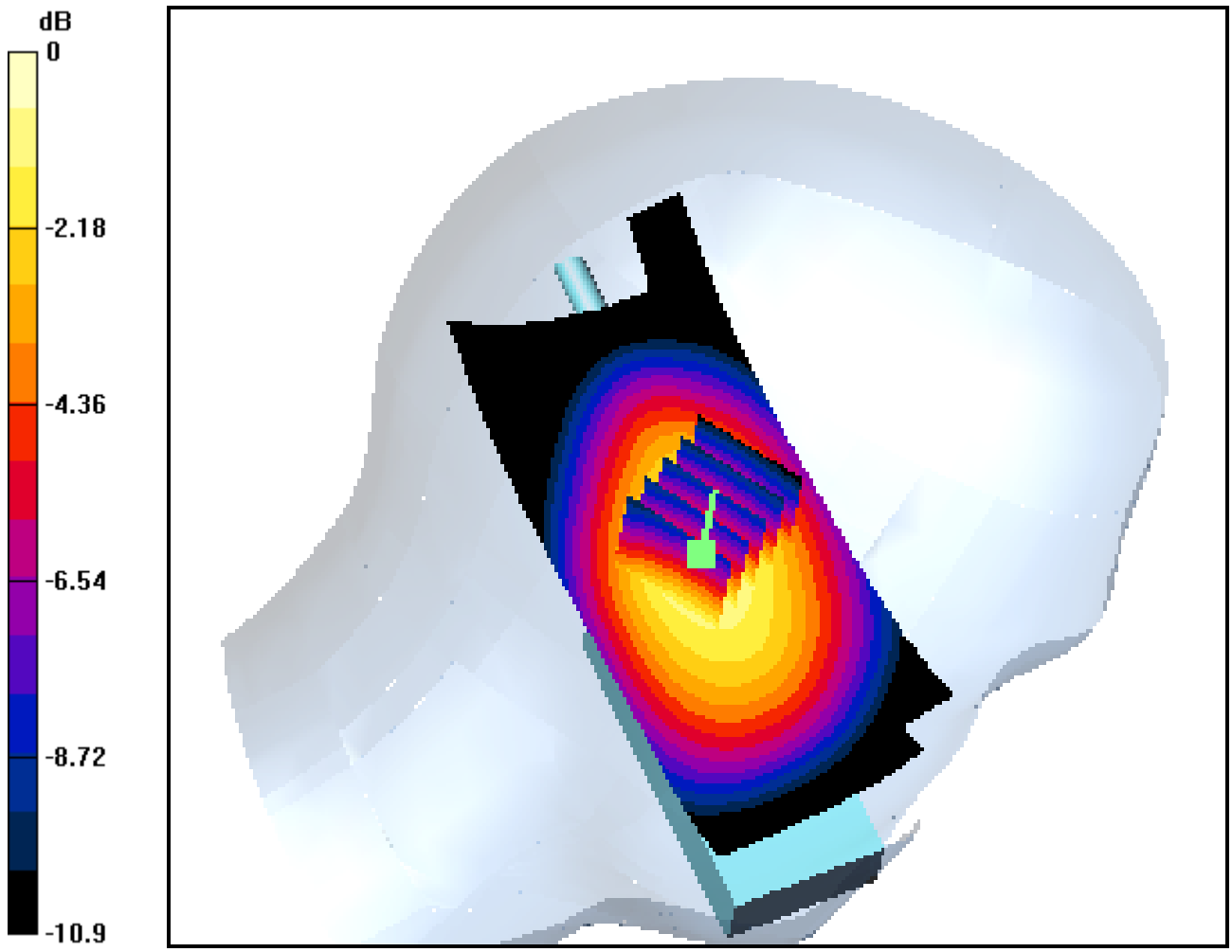

0 dB = 1.08mW/g

DIGITAL EMC CO., LTD

DUT: VK250C; Type: Tri-mode; Serial: FCC #2

Communication System: FCC AMPS; Frequency: 848.97 MHz;Duty Cycle: 1:1
Medium parameters used (interpolated): f = 848.97 MHz; σ = 0.927 mho/m; ε_r = 42.9; ρ = 1000 kg/m^3
Phantom section: Left Section

DASY4 Configuration:
Probe: ET3DV6 - SN1702; ConvF(6.52, 6.52, 6.52); Calibrated: 2004-02-17; Electronics: DAE3 Sn519
Phantom: SAM with 835MHz; Type: SAM; Serial: TP-1223
Measurement SW: DASY4, V4.4 Build 3; Postprocessing SW: SEMCAD, V1.8 Build 130

Date: 2004-12-16; Ambient Temp: 23.0; Tissue Temp:22.3

Left Tilt, AMPS Ch.799, Ant Out, Slide Down, Standard Battery

Area Scan (51x121x1): Measurement grid: dx=15mm, dy=15mm
Zoom Scan (5x5x7)/Cube 0: Measurement grid: dx=8mm, dy=8mm, dz=5mm
Power Drift = -0.1 dB
Peak SAR (extrapolated) = 1.19 W/kg
SAR(1 g) = 0.785 mW/g; SAR(10 g) = 0.508 mW/g

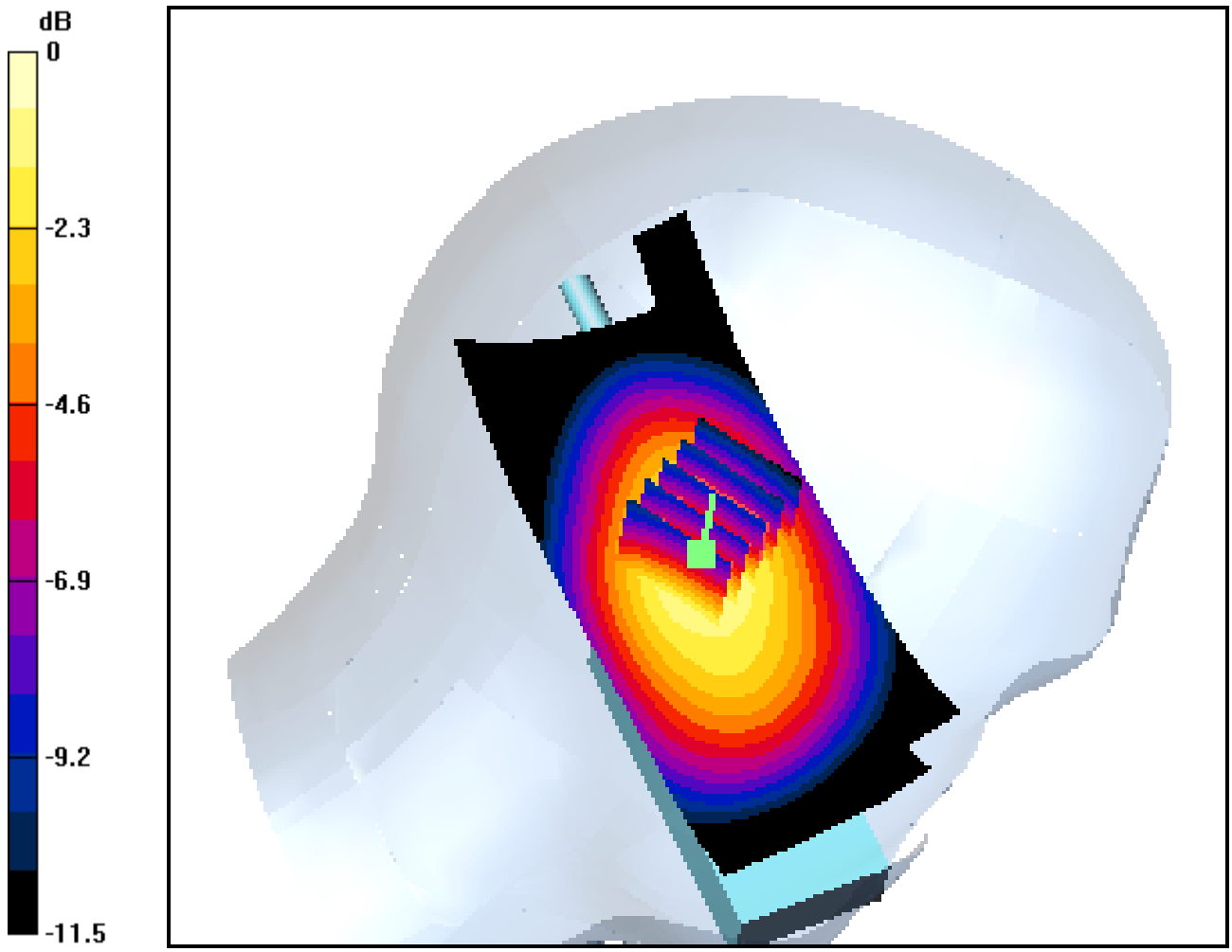

0 dB = 0.856mW/g

DIGITAL EMC CO., LTD

DUT: VK250C_slide up; Type: Tri-mode; Serial: FCC #2

Communication System: FCC AMPS; Frequency: 824.04 MHz;Duty Cycle: 1:1
Medium parameters used (interpolated): f = 824.04 MHz; σ = 0.905 mho/m; ε_r = 43.2; ρ = 1000 kg/m^3
Phantom section: Right Section

DASY4 Configuration:
Probe: ET3DV6 - SN1702; ConvF(6.52, 6.52, 6.52); Calibrated: 2004-02-17; Electronics: DAE3 Sn519
Phantom: SAM with 835MHz; Type: SAM; Serial: TP-1223
Measurement SW: DASY4, V4.4 Build 3; Postprocessing SW: SEMCAD, V1.8 Build 130

Date: 2004-12-17; Ambient Temp: 23.0; Tissue Temp:22.2

Right Touch, AMPS Ch.991, Ant In, Slide Up, Standard Battery

Area Scan (51x81x1): Measurement grid: dx=15mm, dy=15mm
Zoom Scan (5x5x7)/Cube 0: Measurement grid: dx=8mm, dy=8mm, dz=5mm
Power Drift = 0.1 dB
Peak SAR (extrapolated) = 0.273 W/kg
SAR(1 g) = 0.218 mW/g; SAR(10 g) = 0.164 mW/g

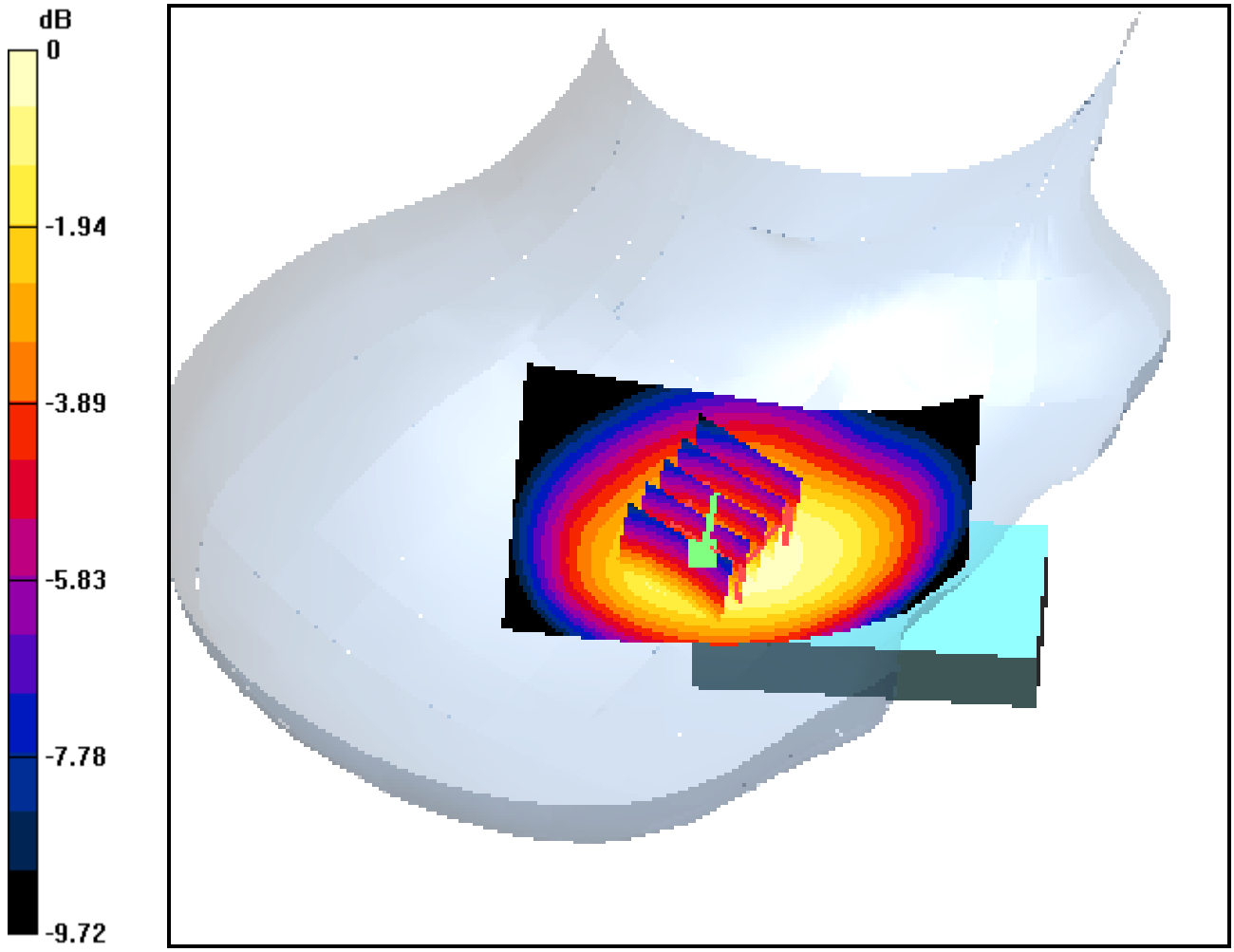

0 dB = 0.229mW/g

DIGITAL EMC CO., LTD

DUT: VK250C_slide up; Type: Tri-mode; Serial: FCC #2

Communication System: FCC AMPS; Frequency: 835.89 MHz;Duty Cycle: 1:1
Medium parameters used (interpolated): f = 835.89 MHz; σ = 0.914 mho/m; ε_r = 43; ρ = 1000 kg/m^3
Phantom section: Right Section

DASY4 Configuration:
Probe: ET3DV6 - SN1702; ConvF(6.52, 6.52, 6.52); Calibrated: 2004-02-17; Electronics: DAE3 Sn519
Phantom: SAM with 835MHz; Type: SAM; Serial: TP-1223
Measurement SW: DASY4, V4.4 Build 3; Postprocessing SW: SEMCAD, V1.8 Build 130

Date: 2004-12-17; Ambient Temp: 23.0; Tissue Temp:22.5

Right Touch, AMPS Ch.363, Ant In, Slide Up, Standard Battery

Area Scan (51x81x1): Measurement grid: dx=15mm, dy=15mm
Zoom Scan (5x5x7)/Cube 0: Measurement grid: dx=8mm, dy=8mm, dz=5mm
Power Drift = -0.1 dB
Peak SAR (extrapolated) = 0.229 W/kg
SAR(1 g) = 0.185 mW/g; SAR(10 g) = 0.140 mW/g

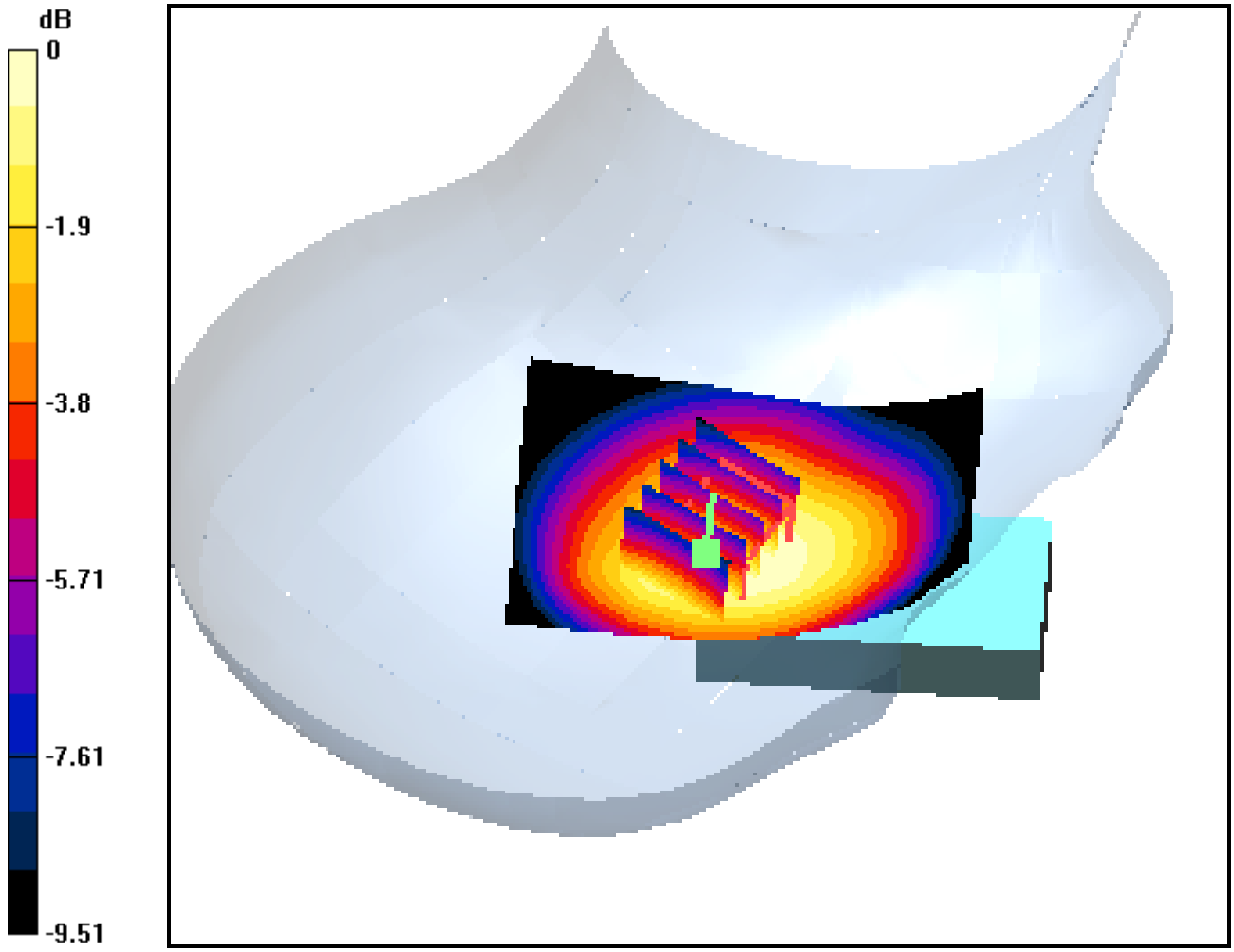

0 dB = 0.192mW/g

DIGITAL EMC CO., LTD

DUT: VK250C_slide up; Type: Tri-mode; Serial: FCC #2

Communication System: FCC AMPS; Frequency: 848.97 MHz;Duty Cycle: 1:1
Medium parameters used (interpolated): f = 848.97 MHz; σ = 0.927 mho/m; ε_r = 42.9; ρ = 1000 kg/m^3
Phantom section: Right Section

DASY4 Configuration:
Probe: ET3DV6 - SN1702; ConvF(6.52, 6.52, 6.52); Calibrated: 2004-02-17; Electronics: DAE3 Sn519
Phantom: SAM with 835MHz; Type: SAM; Serial: TP-1223
Measurement SW: DASY4, V4.4 Build 3; Postprocessing SW: SEMCAD, V1.8 Build 130

Date: 2004-12-17; Ambient Temp: 23.0; Tissue Temp:22.5

Right Touch, AMPS Ch.799, Ant In, Slide Up, Standard Battery

Area Scan (51x81x1): Measurement grid: dx=15mm, dy=15mm
Zoom Scan (5x5x7)/Cube 0: Measurement grid: dx=8mm, dy=8mm, dz=5mm
Power Drift = -0.1 dB
Peak SAR (extrapolated) = 0.206 W/kg
SAR(1 g) = 0.162 mW/g; SAR(10 g) = 0.121 mW/g

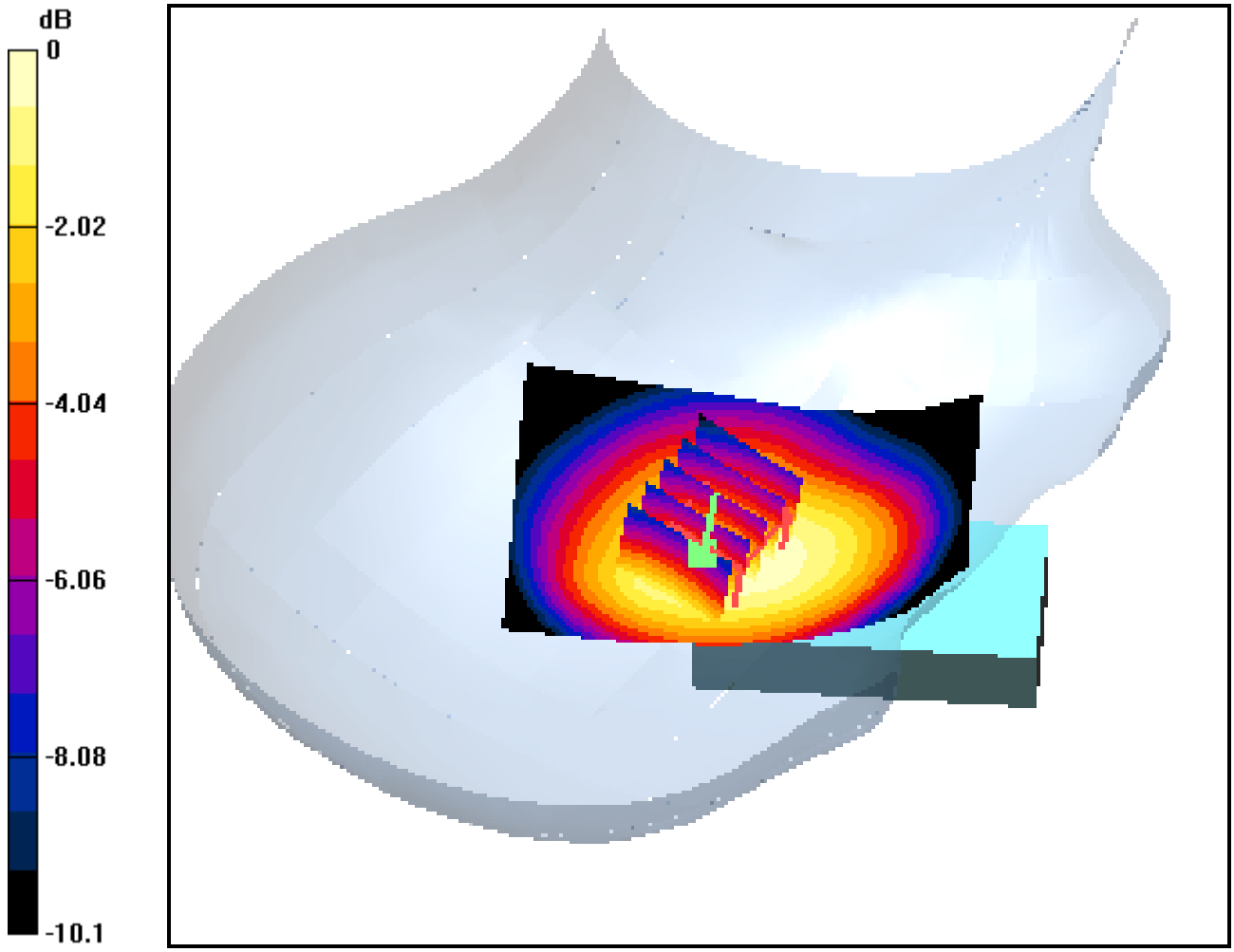

0 dB = 0.171mW/g

DIGITAL EMC CO., LTD

DUT: VK250C_slide up; Type: Tri-mode; Serial: FCC #2

Communication System: FCC AMPS; Frequency: 824.04 MHz;Duty Cycle: 1:1
Medium parameters used (interpolated): f = 824.04 MHz; σ = 0.905 mho/m; ε_r = 43.2; ρ = 1000 kg/m^3
Phantom section: Right Section

DASY4 Configuration:
Probe: ET3DV6 - SN1702; ConvF(6.52, 6.52, 6.52); Calibrated: 2004-02-17; Electronics: DAE3 Sn519
Phantom: SAM with 835MHz; Type: SAM; Serial: TP-1223
Measurement SW: DASY4, V4.4 Build 3; Postprocessing SW: SEMCAD, V1.8 Build 130

Date: 2004-12-17; Ambient Temp: 23.0; Tissue Temp:22.5

Right Tilt, AMPS Ch.991, Ant In, Slide Up, Standard Battery

Area Scan (51x81x1): Measurement grid: dx=15mm, dy=15mm
Zoom Scan (5x5x7)/Cube 0: Measurement grid: dx=8mm, dy=8mm, dz=5mm
Power Drift = 0.0 dB
Peak SAR (extrapolated) = 0.218 W/kg
SAR(1 g) = 0.170 mW/g; SAR(10 g) = 0.125 mW/g

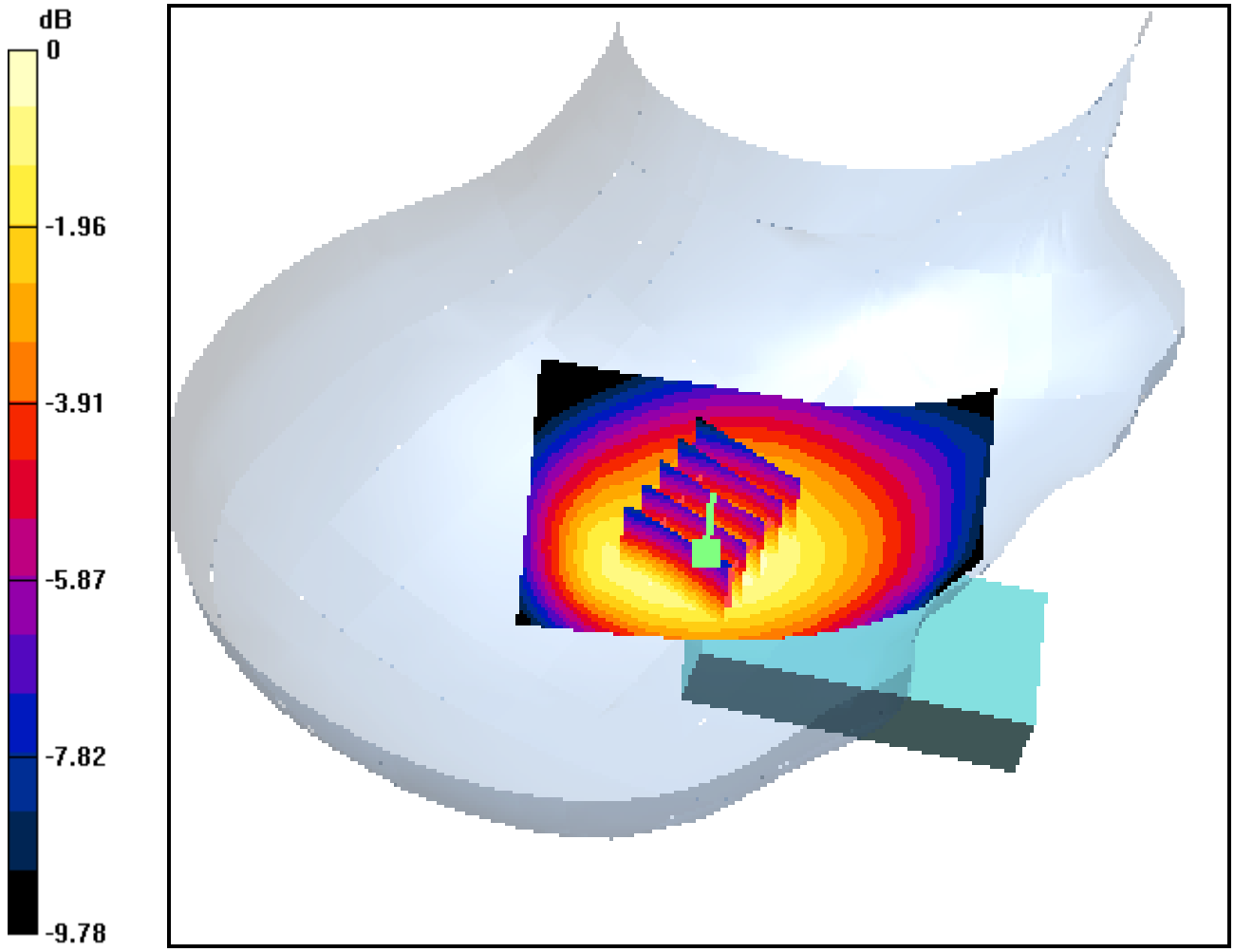

0 dB = 0.178mW/g

DIGITAL EMC CO., LTD

DUT: VK250C_slide up; Type: Tri-mode; Serial: FCC #2

Communication System: FCC AMPS; Frequency: 835.89 MHz;Duty Cycle: 1:1
Medium parameters used (interpolated): f = 835.89 MHz; σ = 0.914 mho/m; ε_r = 43; ρ = 1000 kg/m^3
Phantom section: Right Section

DASY4 Configuration:
Probe: ET3DV6 - SN1702; ConvF(6.52, 6.52, 6.52); Calibrated: 2004-02-17; Electronics: DAE3 Sn519
Phantom: SAM with 835MHz; Type: SAM; Serial: TP-1223
Measurement SW: DASY4, V4.4 Build 3; Postprocessing SW: SEMCAD, V1.8 Build 130

Date: 2004-12-17; Ambient Temp: 23.0; Tissue Temp:22.5

Right Tilt, AMPS Ch.363, Ant In, Slide Up, Standard Battery

Area Scan (51x81x1): Measurement grid: dx=15mm, dy=15mm
Zoom Scan (5x5x7)/Cube 0: Measurement grid: dx=8mm, dy=8mm, dz=5mm
Power Drift = -0.3 dB
Peak SAR (extrapolated) = 0.140 W/kg
SAR(1 g) = 0.109 mW/g; SAR(10 g) = 0.079 mW/g

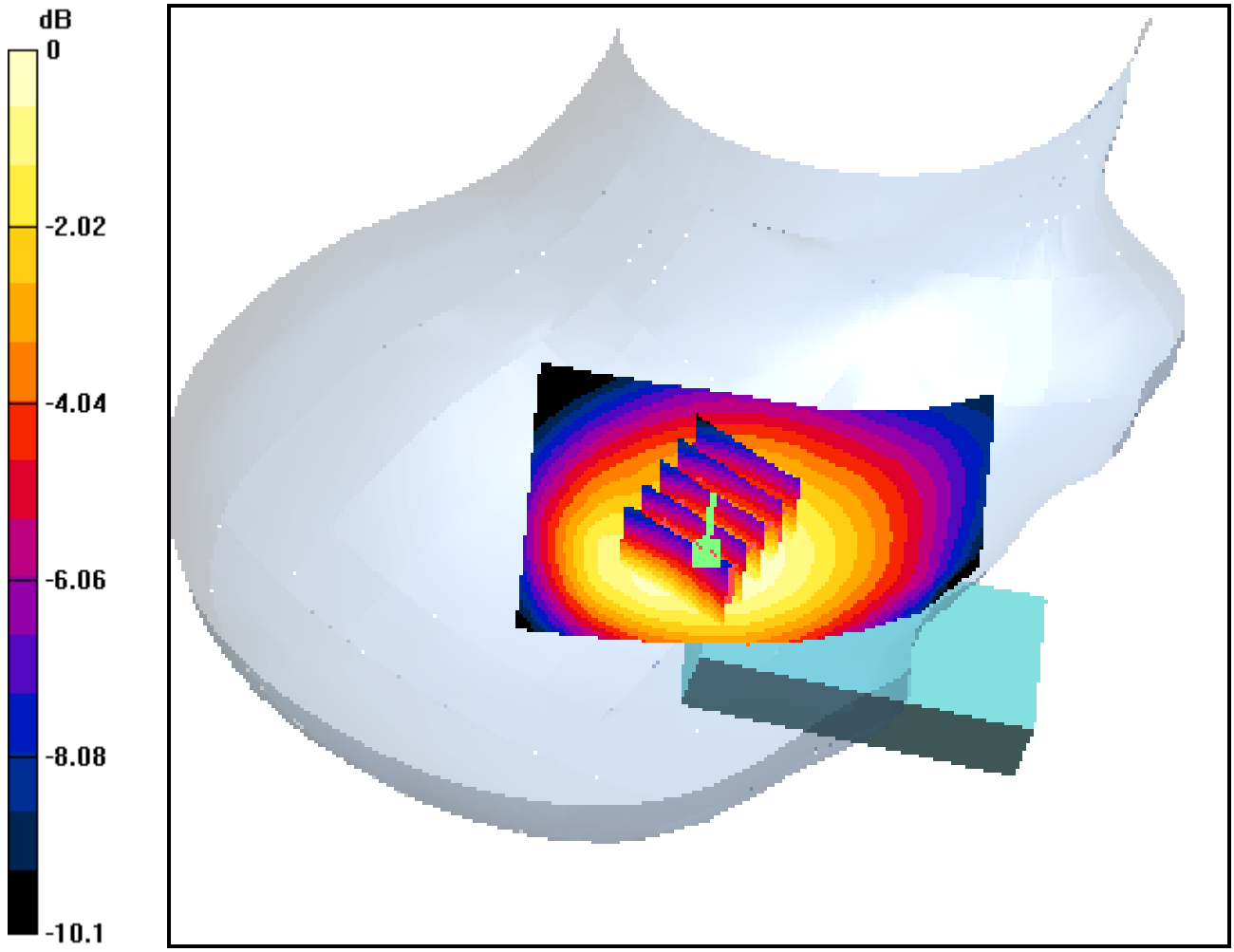

0 dB = 0.115mW/g

DIGITAL EMC CO., LTD

DUT: VK250C_slide up; Type: Tri-mode; Serial: FCC #2

Communication System: FCC AMPS; Frequency: 848.97 MHz;Duty Cycle: 1:1
Medium parameters used (interpolated): f = 848.97 MHz; σ = 0.927 mho/m; ε_r = 42.9; ρ = 1000 kg/m^3
Phantom section: Right Section

DASY4 Configuration:
Probe: ET3DV6 - SN1702; ConvF(6.52, 6.52, 6.52); Calibrated: 2004-02-17; Electronics: DAE3 Sn519
Phantom: SAM with 835MHz; Type: SAM; Serial: TP-1223
Measurement SW: DASY4, V4.4 Build 3; Postprocessing SW: SEMCAD, V1.8 Build 130

Date: 2004-12-17; Ambient Temp: 23.0; Tissue Temp:22.5

Right Tilt, AMPS Ch.799, Ant In, Slide Up, Standard Battery

Area Scan (51x81x1): Measurement grid: dx=15mm, dy=15mm
Zoom Scan (5x5x7)/Cube 0: Measurement grid: dx=8mm, dy=8mm, dz=5mm
Power Drift = -0.1 dB
Peak SAR (extrapolated) = 0.098 W/kg
SAR(1 g) = 0.078 mW/g; SAR(10 g) = 0.057 mW/g

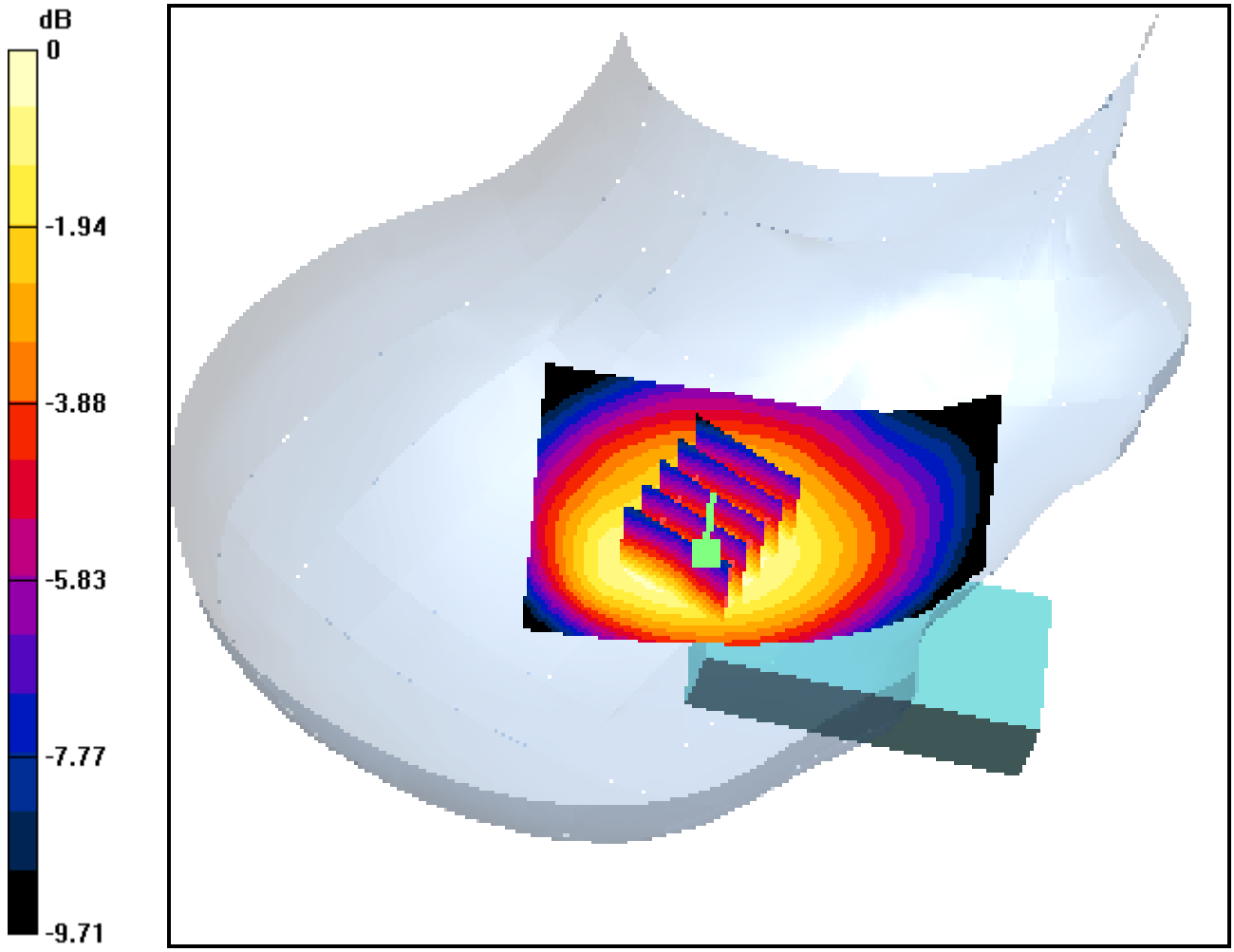

0 dB = 0.082mW/g

DIGITAL EMC CO., LTD

DUT: VK250C_slide up; Type: Tri-mode; Serial: FCC #2

Communication System: FCC AMPS; Frequency: 824.04 MHz;Duty Cycle: 1:1
Medium parameters used (interpolated): f = 824.04 MHz; σ = 0.905 mho/m; ε_r = 43.2; ρ = 1000 kg/m^3
Phantom section: Left Section

DASY4 Configuration:
Probe: ET3DV6 - SN1702; ConvF(6.52, 6.52, 6.52); Calibrated: 2004-02-17; Electronics: DAE3 Sn519
Phantom: SAM with 835MHz; Type: SAM; Serial: TP-1223
Measurement SW: DASY4, V4.4 Build 3; Postprocessing SW: SEMCAD, V1.8 Build 130

Date: 2004-12-18; Ambient Temp: 23.0; Tissue Temp:22.3

Left Touch, AMPS Ch.991, Ant In, Slide Up, Standard Battery

Area Scan (51x81x1): Measurement grid: dx=15mm, dy=15mm
Zoom Scan (5x5x7)/Cube 0: Measurement grid: dx=8mm, dy=8mm, dz=5mm
Power Drift = -0.3 dB
Peak SAR (extrapolated) = 0.418 W/kg
SAR(1 g) = 0.322 mW/g; SAR(10 g) = 0.236 mW/g

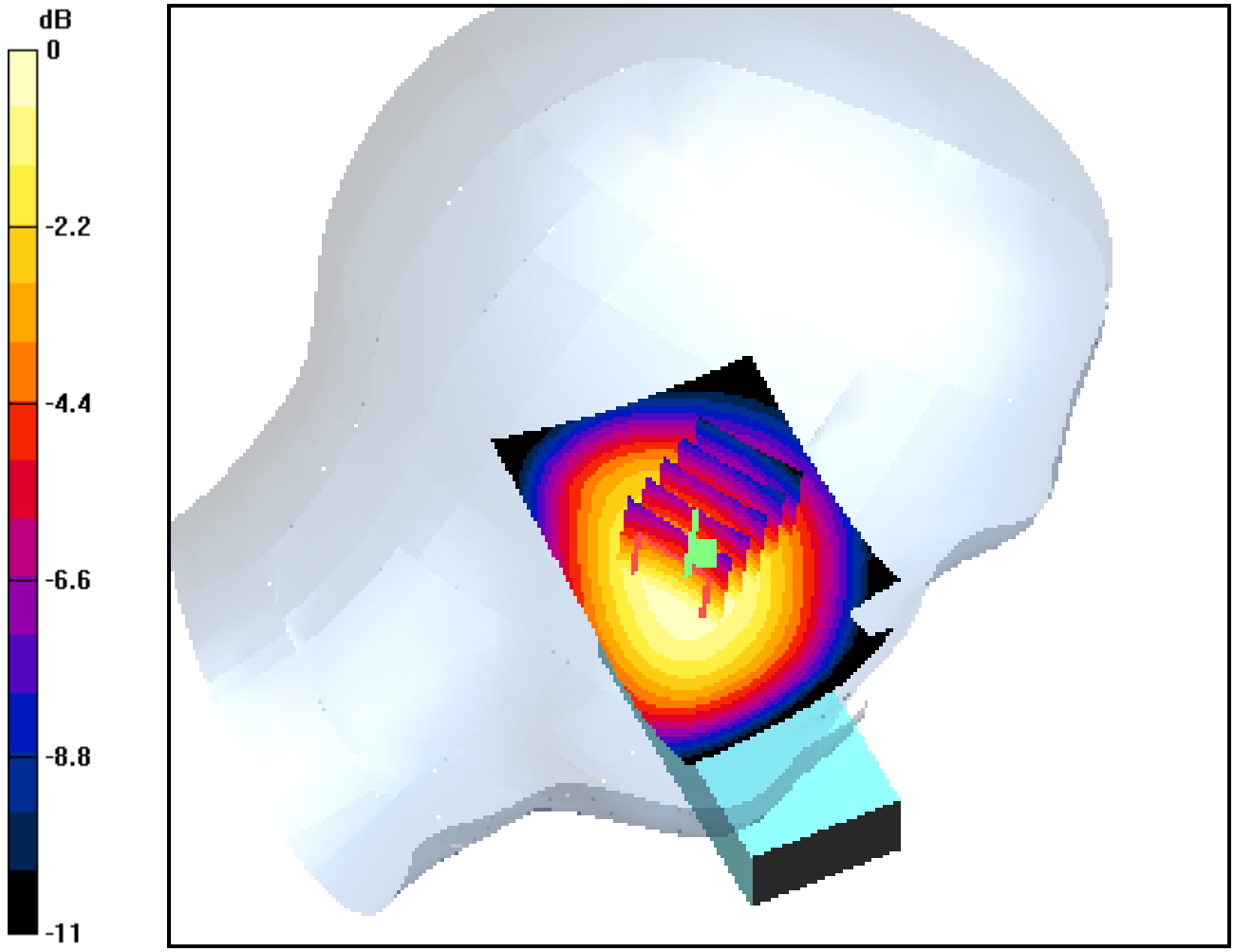

0 dB = 0.335mW/g

DIGITAL EMC CO., LTD

DUT: VK250C_slide up; Type: Tri-mode; Serial: FCC #2

Communication System: FCC AMPS; Frequency: 835.89 MHz;Duty Cycle: 1:1
Medium parameters used (interpolated): f = 835.89 MHz; σ = 0.914 mho/m; ε_r = 43; ρ = 1000 kg/m^3
Phantom section: Left Section

DASY4 Configuration:
Probe: ET3DV6 - SN1702; ConvF(6.52, 6.52, 6.52); Calibrated: 2004-02-17; Electronics: DAE3 Sn519
Phantom: SAM with 835MHz; Type: SAM; Serial: TP-1223
Measurement SW: DASY4, V4.4 Build 3; Postprocessing SW: SEMCAD, V1.8 Build 130

Date: 2004-12-18; Ambient Temp: 23.0; Tissue Temp:22.3

Left Touch, AMPS Ch.363, Ant In, Slide Up, Standard Battery

Area Scan (51x81x1): Measurement grid: dx=15mm, dy=15mm
Zoom Scan (5x5x7)/Cube 0: Measurement grid: dx=8mm, dy=8mm, dz=5mm
Power Drift = -0.1 dB
Peak SAR (extrapolated) = 0.338 W/kg
SAR(1 g) = 0.258 mW/g; SAR(10 g) = 0.188 mW/g

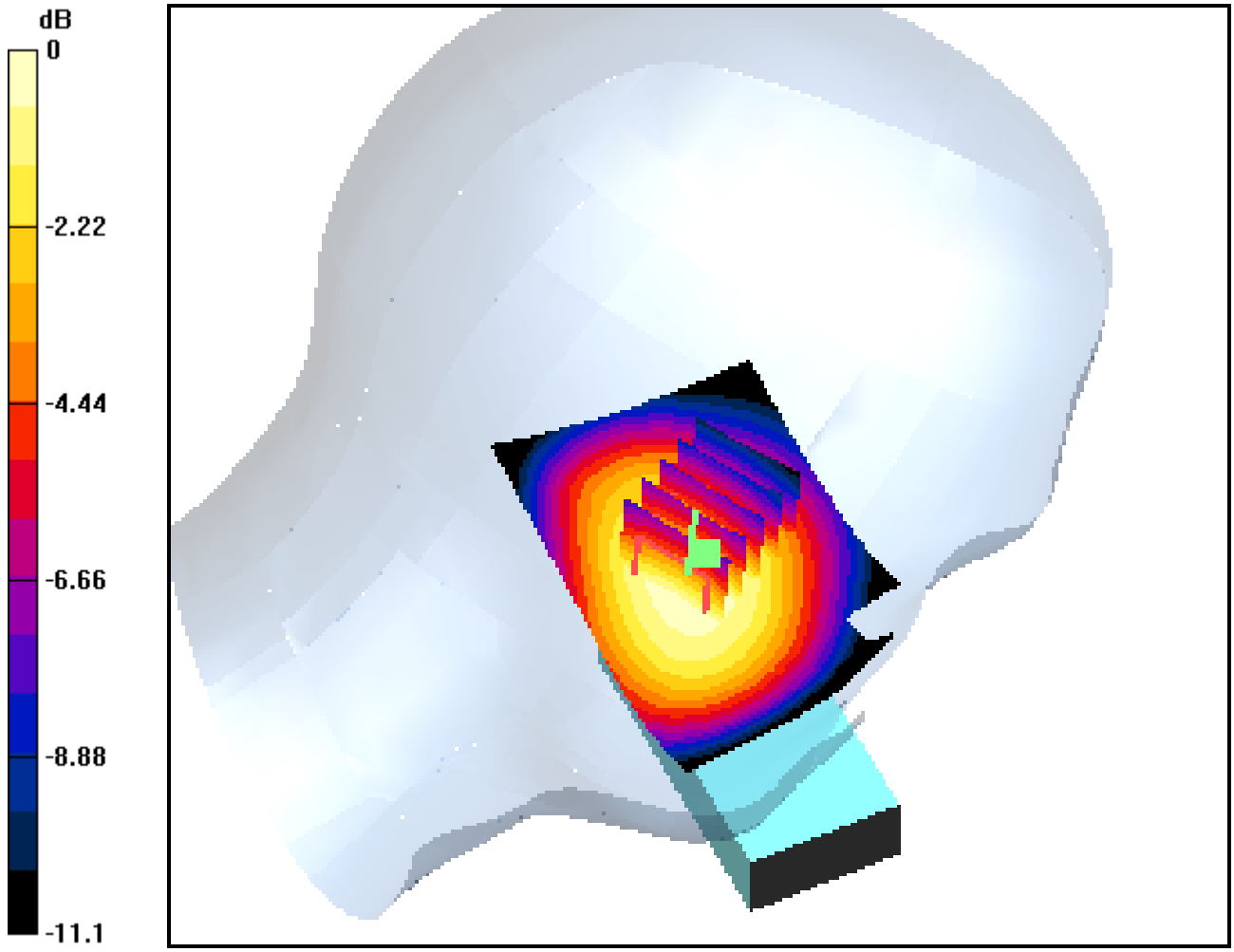

0 dB = 0.269mW/g

DIGITAL EMC CO., LTD

DUT: VK250C_slide up; Type: Tri-mode; Serial: FCC #2

Communication System: FCC AMPS; Frequency: 848.97 MHz;Duty Cycle: 1:1
Medium parameters used (interpolated): f = 848.97 MHz; σ = 0.927 mho/m; ε_r = 42.9; ρ = 1000 kg/m^3
Phantom section: Left Section

DASY4 Configuration:
Probe: ET3DV6 - SN1702; ConvF(6.52, 6.52, 6.52); Calibrated: 2004-02-17; Electronics: DAE3 Sn519
Phantom: SAM with 835MHz; Type: SAM; Serial: TP-1223
Measurement SW: DASY4, V4.4 Build 3; Postprocessing SW: SEMCAD, V1.8 Build 130

Date: 2004-12-18; Ambient Temp: 23.0; Tissue Temp:22.3

Left Touch, AMPS Ch.799, Ant In, Slide Up, Standard Battery

Area Scan (51x81x1): Measurement grid: dx=15mm, dy=15mm
Zoom Scan (5x5x7)/Cube 0: Measurement grid: dx=8mm, dy=8mm, dz=5mm
Power Drift = -0.3 dB
Peak SAR (extrapolated) = 0.325 W/kg
SAR(1 g) = 0.245 mW/g; SAR(10 g) = 0.178 mW/g

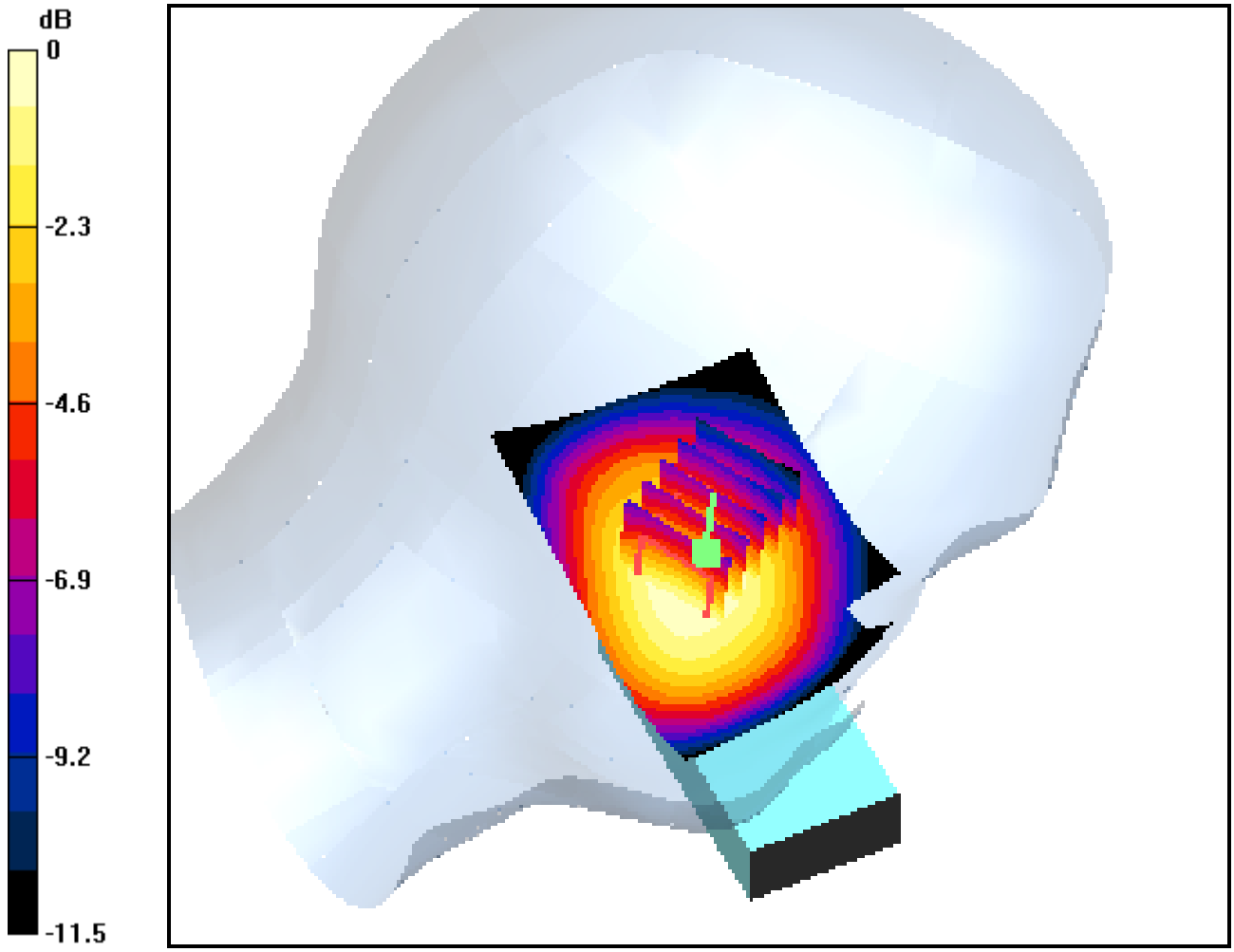

0 dB = 0.256mW/g

DIGITAL EMC CO., LTD

DUT: VK250C_slide up; Type: Tri-mode; Serial: FCC #2

Communication System: FCC AMPS; Frequency: 824.04 MHz;Duty Cycle: 1:1
Medium parameters used (interpolated): f = 824.04 MHz; σ = 0.905 mho/m; ε_r = 43.2; ρ = 1000 kg/m^3
Phantom section: Left Section

DASY4 Configuration:
Probe: ET3DV6 - SN1702; ConvF(6.52, 6.52, 6.52); Calibrated: 2004-02-17; Electronics: DAE3 Sn519
Phantom: SAM with 835MHz; Type: SAM; Serial: TP-1223
Measurement SW: DASY4, V4.4 Build 3; Postprocessing SW: SEMCAD, V1.8 Build 130

Date: 2004-12-18; Ambient Temp: 23.0; Tissue Temp:22.3

Left Tilt, AMPS Ch.991, Ant In, Slide Up, Standard Battery

Area Scan (51x81x1): Measurement grid: dx=15mm, dy=15mm
Zoom Scan (5x5x7)/Cube 0: Measurement grid: dx=8mm, dy=8mm, dz=5mm
Power Drift = -0.1 dB
Peak SAR (extrapolated) = 0.267 W/kg
SAR(1 g) = 0.210 mW/g; SAR(10 g) = 0.152 mW/g

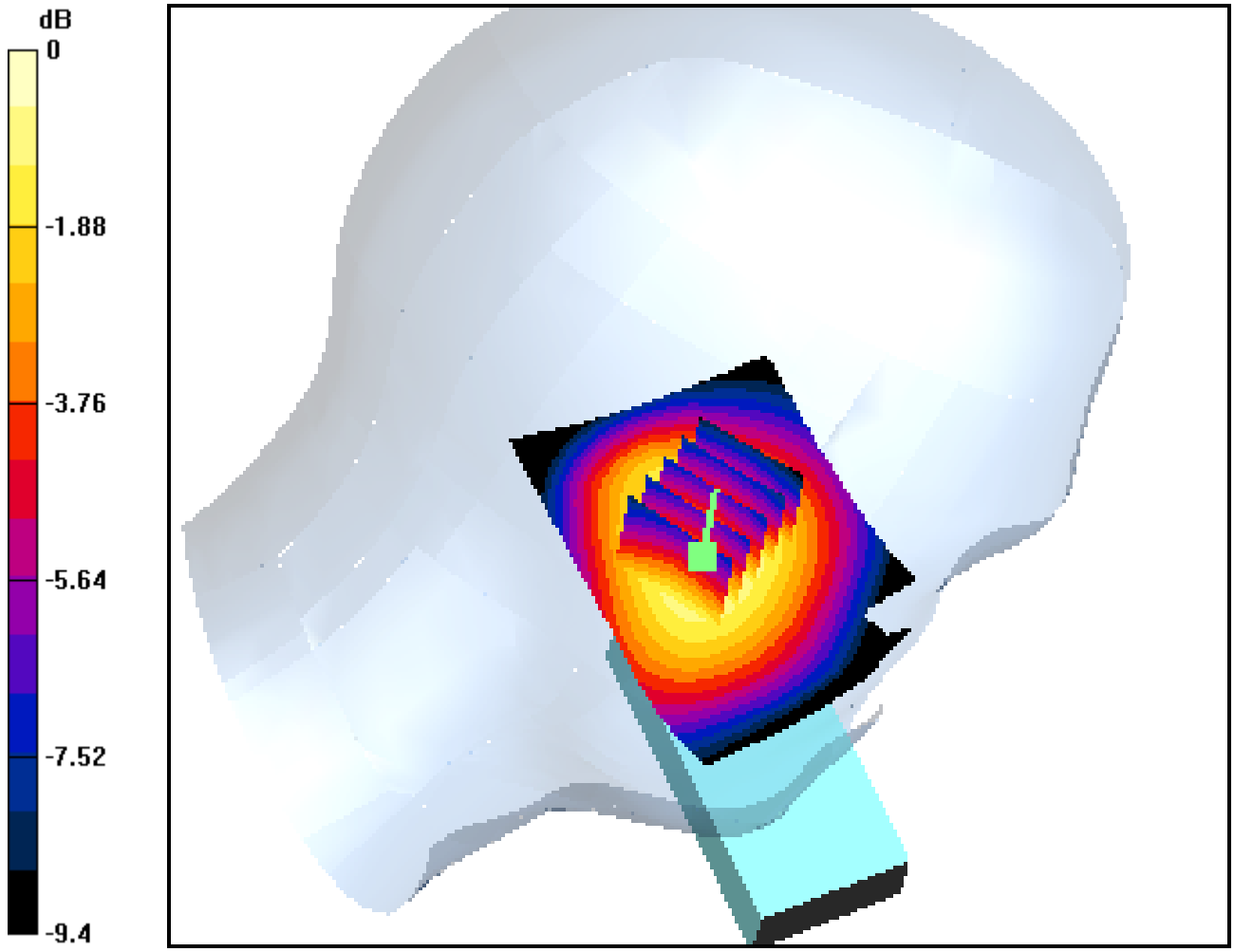

0 dB = 0.222mW/g

DIGITAL EMC CO., LTD

DUT: VK250C_slide up; Type: Tri-mode; Serial: FCC #2

Communication System: FCC AMPS; Frequency: 835.89 MHz;Duty Cycle: 1:1
Medium parameters used (interpolated): f = 835.89 MHz; σ = 0.914 mho/m; ε_r = 43; ρ = 1000 kg/m^3
Phantom section: Left Section

DASY4 Configuration:
Probe: ET3DV6 - SN1702; ConvF(6.52, 6.52, 6.52); Calibrated: 2004-02-17; Electronics: DAE3 Sn519
Phantom: SAM with 835MHz; Type: SAM; Serial: TP-1223
Measurement SW: DASY4, V4.4 Build 3; Postprocessing SW: SEMCAD, V1.8 Build 130

Date: 2004-12-18; Ambient Temp: 23.0; Tissue Temp:22.3

Left Tilt, AMPS Ch.363, Ant In, Slide Up, Standard Battery

Area Scan (51x81x1): Measurement grid: dx=15mm, dy=15mm
Zoom Scan (5x5x7)/Cube 0: Measurement grid: dx=8mm, dy=8mm, dz=5mm
Power Drift = -0.1 dB
Peak SAR (extrapolated) = 0.195 W/kg
SAR(1 g) = 0.151 mW/g; SAR(10 g) = 0.109 mW/g

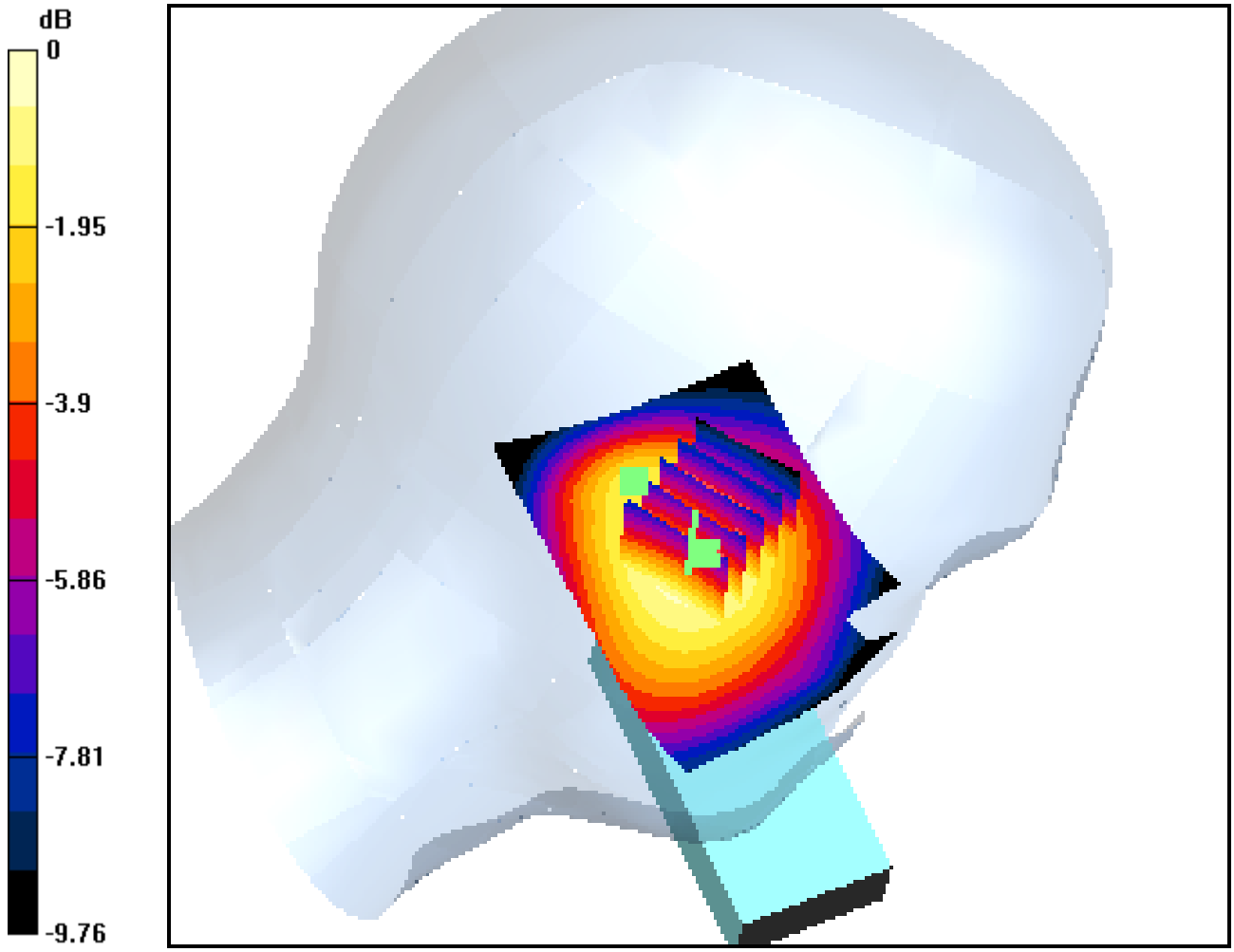

0 dB = 0.156mW/g

DIGITAL EMC CO., LTD

DUT: VK250C_slide up; Type: Tri-mode; Serial: FCC #2

Communication System: FCC AMPS; Frequency: 848.97 MHz;Duty Cycle: 1:1
Medium parameters used (interpolated): f = 848.97 MHz; σ = 0.927 mho/m; ε_r = 42.9; ρ = 1000 kg/m^3
Phantom section: Left Section

DASY4 Configuration:
Probe: ET3DV6 - SN1702; ConvF(6.52, 6.52, 6.52); Calibrated: 2004-02-17; Electronics: DAE3 Sn519
Phantom: SAM with 835MHz; Type: SAM; Serial: TP-1223
Measurement SW: DASY4, V4.4 Build 3; Postprocessing SW: SEMCAD, V1.8 Build 130

Date: 2004-12-18; Ambient Temp: 23.0; Tissue Temp:22.3

Left Tilt, AMPS Ch.799, Ant In, Slide Up, Standard Battery

Area Scan (51x81x1): Measurement grid: dx=15mm, dy=15mm
Zoom Scan (5x5x7)/Cube 0: Measurement grid: dx=8mm, dy=8mm, dz=5mm
Power Drift = -0.3 dB
Peak SAR (extrapolated) = 0.138 W/kg
SAR(1 g) = 0.106 mW/g; SAR(10 g) = 0.076 mW/g

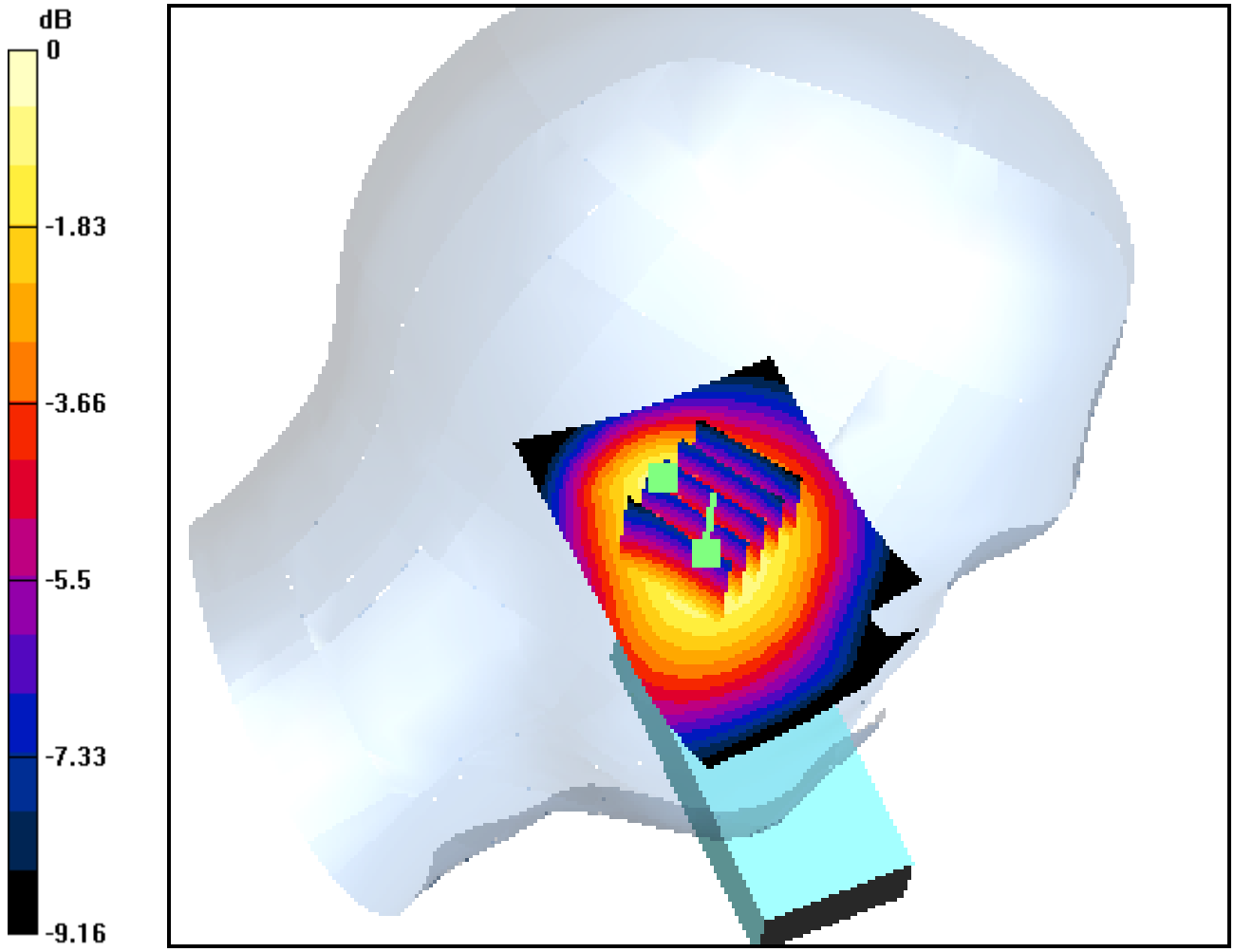

0 dB = 0.112mW/g

DIGITAL EMC CO., LTD

DUT: VK250C_slide up; Type: Tri-mode; Serial: FCC #2

Communication System: FCC AMPS; Frequency: 824.04 MHz;Duty Cycle: 1:1
Medium parameters used (interpolated): f = 824.04 MHz; σ = 0.905 mho/m; ε_r = 43.2; ρ = 1000 kg/m^3
Phantom section: Right Section

DASY4 Configuration:
Probe: ET3DV6 - SN1702; ConvF(6.52, 6.52, 6.52); Calibrated: 2004-02-17; Electronics: DAE3 Sn519
Phantom: SAM with 835MHz; Type: SAM; Serial: TP-1223
Measurement SW: DASY4, V4.4 Build 3; Postprocessing SW: SEMCAD, V1.8 Build 130

Date: 2004-12-18; Ambient Temp: 23.0; Tissue Temp:22.5

Right Touch, AMPS Ch.991, Ant Out, Slide Up, Standard Battery

Area Scan (51x101x1): Measurement grid: dx=15mm, dy=15mm
Zoom Scan (5x5x7)/Cube 0: Measurement grid: dx=8mm, dy=8mm, dz=5mm
Power Drift = -0.1 dB
Peak SAR (extrapolated) = 0.950 W/kg
SAR(1 g) = 0.752 mW/g; SAR(10 g) = 0.555 mW/g

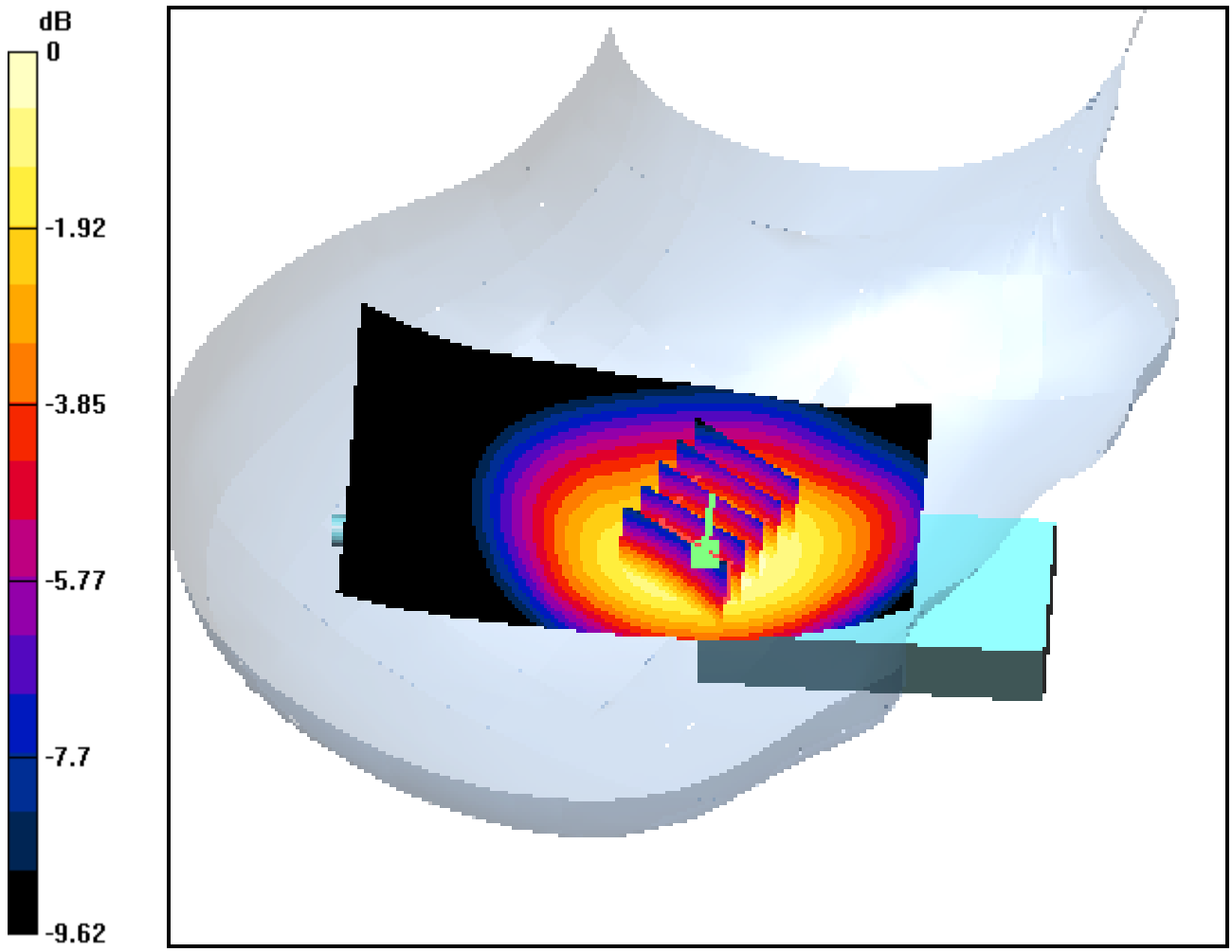

0 dB = 0.786mW/g

DIGITAL EMC CO., LTD

DUT: VK250C_slide up; Type: Tri-mode; Serial: FCC #2

Communication System: FCC AMPS; Frequency: 835.89 MHz;Duty Cycle: 1:1
Medium parameters used (interpolated): f = 835.89 MHz; σ = 0.914 mho/m; ε_r = 43; ρ = 1000 kg/m^3
Phantom section: Right Section

DASY4 Configuration:
Probe: ET3DV6 - SN1702; ConvF(6.52, 6.52, 6.52); Calibrated: 2004-02-17; Electronics: DAE3 Sn519
Phantom: SAM with 835MHz; Type: SAM; Serial: TP-1223
Measurement SW: DASY4, V4.4 Build 3; Postprocessing SW: SEMCAD, V1.8 Build 130

Date: 2004-12-18; Ambient Temp: 23.0; Tissue Temp:22.5

Right Touch, AMPS Ch.363Area Scan (51x101x1): Measurement grid: dx=15mm, dy=15mm
Zoom Scan (5x5x7)/Cube 0: Measurement grid: dx=8mm, dy=8mm, dz=5mm
Power Drift = -0.1 dB
Peak SAR (extrapolated) = 0.733 W/kg
SAR(1 g) = 0.577 mW/g; SAR(10 g) = 0.422 mW/g

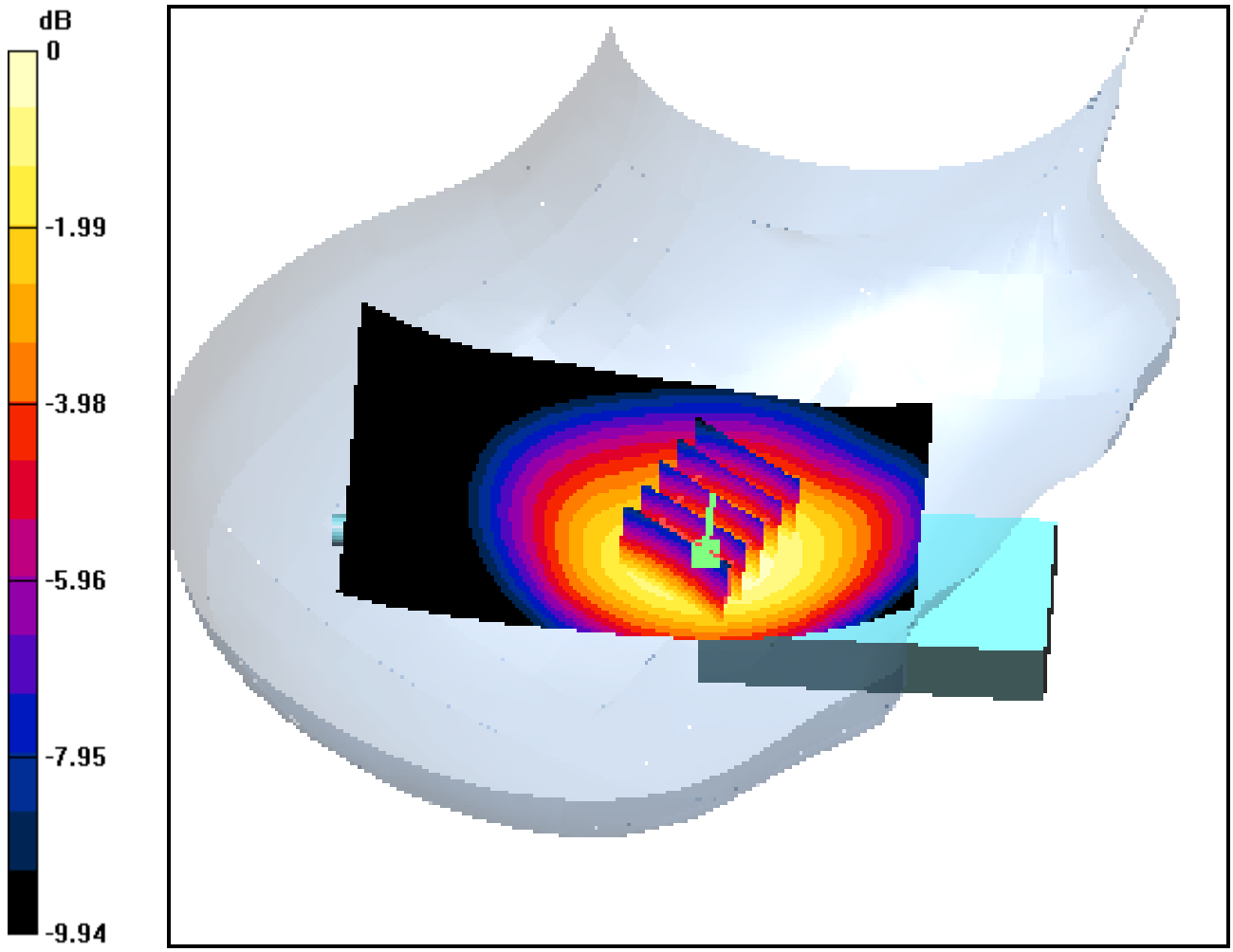

0 dB = 0.607mW/g

DIGITAL EMC CO., LTD

DUT: VK250C_slide up; Type: Tri-mode; Serial: FCC #2

Communication System: FCC AMPS; Frequency: 848.97 MHz;Duty Cycle: 1:1
Medium parameters used (interpolated): f = 848.97 MHz; σ = 0.927 mho/m; ε_r = 42.9; ρ = 1000 kg/m^3
Phantom section: Right Section

DASY4 Configuration:
Probe: ET3DV6 - SN1702; ConvF(6.52, 6.52, 6.52); Calibrated: 2004-02-17; Electronics: DAE3 Sn519
Phantom: SAM with 835MHz; Type: SAM; Serial: TP-1223
Measurement SW: DASY4, V4.4 Build 3; Postprocessing SW: SEMCAD, V1.8 Build 130

Date: 2004-12-18; Ambient Temp: 23.0; Tissue Temp:22.5

Right Touch, AMPS Ch.799, Ant Out, Slide Up, Standard Battery

Area Scan (51x101x1): Measurement grid: dx=15mm, dy=15mm
Zoom Scan (5x5x7)/Cube 0: Measurement grid: dx=8mm, dy=8mm, dz=5mm
Power Drift = -0.2 dB
Peak SAR (extrapolated) = 0.686 W/kg
SAR(1 g) = 0.538 mW/g; SAR(10 g) = 0.390 mW/g

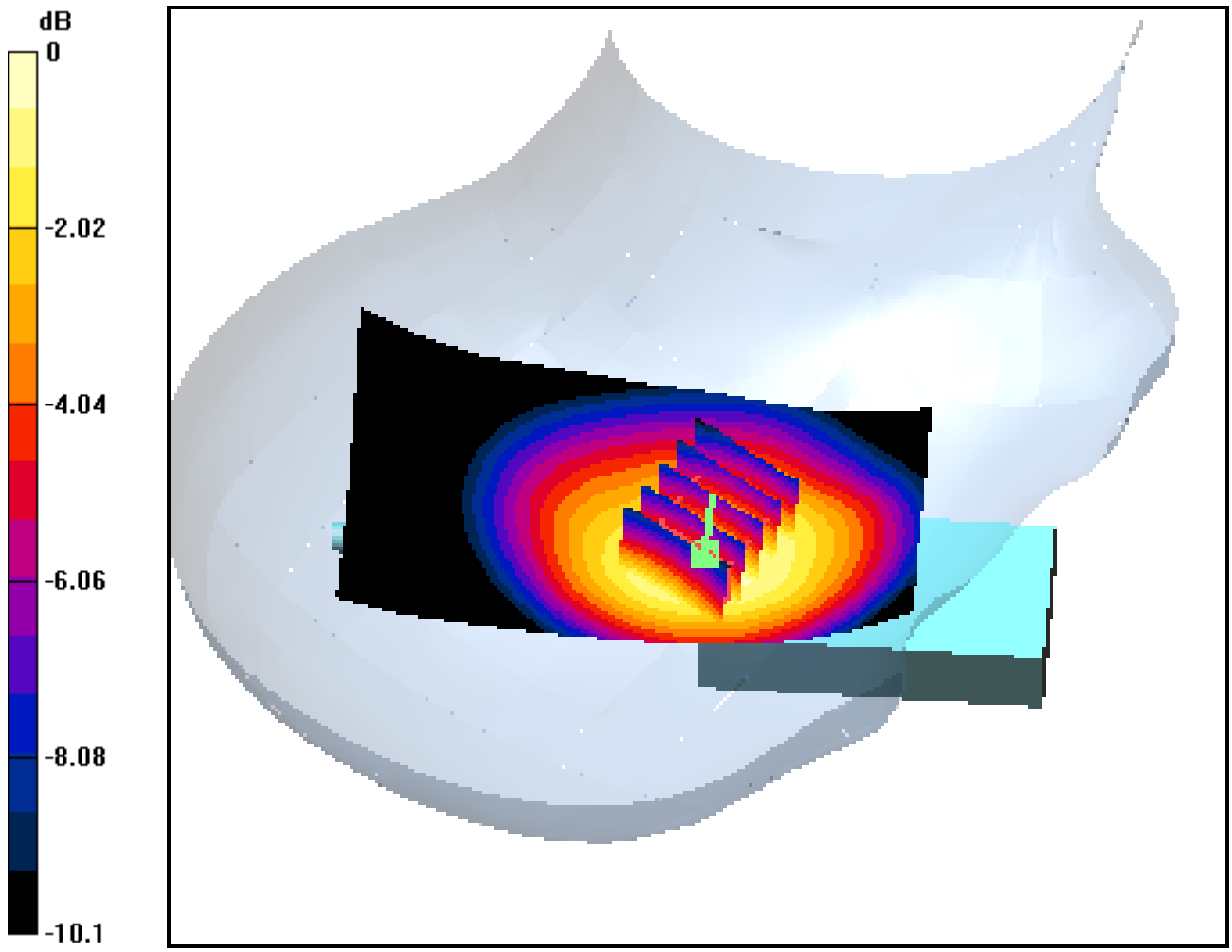

0 dB = 0.569mW/g

DIGITAL EMC CO., LTD

DUT: VK250C_slide up; Type: Tri-mode; Serial: FCC #2

Communication System: FCC AMPS; Frequency: 824.04 MHz;Duty Cycle: 1:1
Medium parameters used (interpolated): f = 824.04 MHz; σ = 0.905 mho/m; ε_r = 43.2; ρ = 1000 kg/m^3
Phantom section: Right Section

DASY4 Configuration:
Probe: ET3DV6 - SN1702; ConvF(6.52, 6.52, 6.52); Calibrated: 2004-02-17; Electronics: DAE3 Sn519
Phantom: SAM with 835MHz; Type: SAM; Serial: TP-1223
Measurement SW: DASY4, V4.4 Build 3; Postprocessing SW: SEMCAD, V1.8 Build 130

Date: 2004-12-18; Ambient Temp: 23.0; Tissue Temp:22.5

Right Tilt, AMPS Ch.991, Ant Out, Slide Up, Standard Battery

Area Scan (51x101x1): Measurement grid: dx=15mm, dy=15mm
Zoom Scan (5x5x7)/Cube 0: Measurement grid: dx=8mm, dy=8mm, dz=5mm
Power Drift = -0.2 dB
Peak SAR (extrapolated) = 0.638 W/kg
SAR(1 g) = 0.497 mW/g; SAR(10 g) = 0.363 mW/g

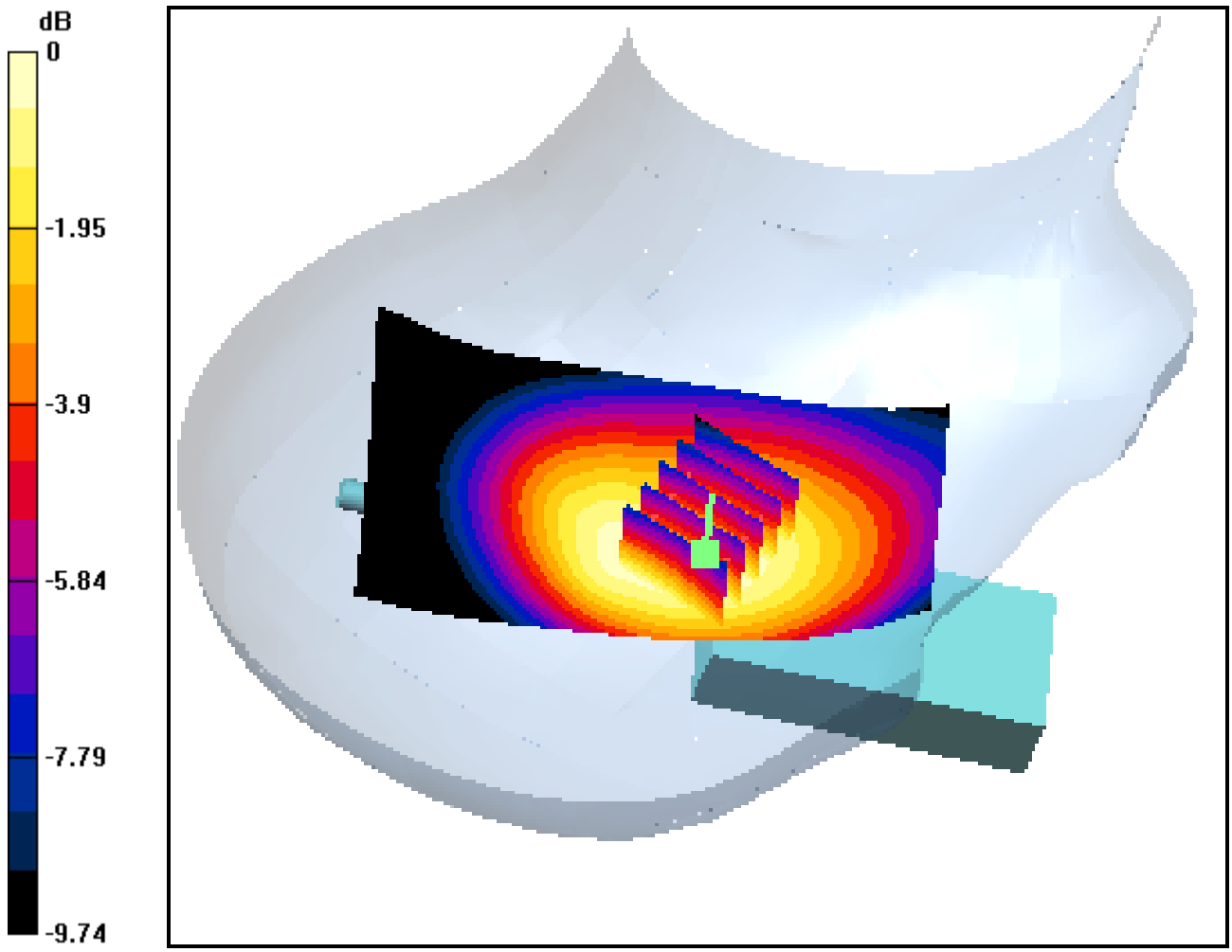

0 dB = 0.523mW/g

DIGITAL EMC CO., LTD

DUT: VK250C_slide up; Type: Tri-mode; Serial: FCC #2

Communication System: FCC AMPS; Frequency: 835.89 MHz;Duty Cycle: 1:1
Medium parameters used (interpolated): f = 835.89 MHz; σ = 0.914 mho/m; ε_r = 43; ρ = 1000 kg/m^3
Phantom section: Right Section

DASY4 Configuration:
Probe: ET3DV6 - SN1702; ConvF(6.52, 6.52, 6.52); Calibrated: 2004-02-17; Electronics: DAE3 Sn519
Phantom: SAM with 835MHz; Type: SAM; Serial: TP-1223
Measurement SW: DASY4, V4.4 Build 3; Postprocessing SW: SEMCAD, V1.8 Build 130

Date: 2004-12-18; Ambient Temp: 23.0; Tissue Temp:22.5

Right Tilt, AMPS Ch.363, Ant Out, Slide Up, Standard Battery

Area Scan (51x101x1): Measurement grid: dx=15mm, dy=15mm
Zoom Scan (5x5x7)/Cube 0: Measurement grid: dx=8mm, dy=8mm, dz=5mm
Power Drift = -0.3 dB
Peak SAR (extrapolated) = 0.456 W/kg
SAR(1 g) = 0.352 mW/g; SAR(10 g) = 0.256 mW/g

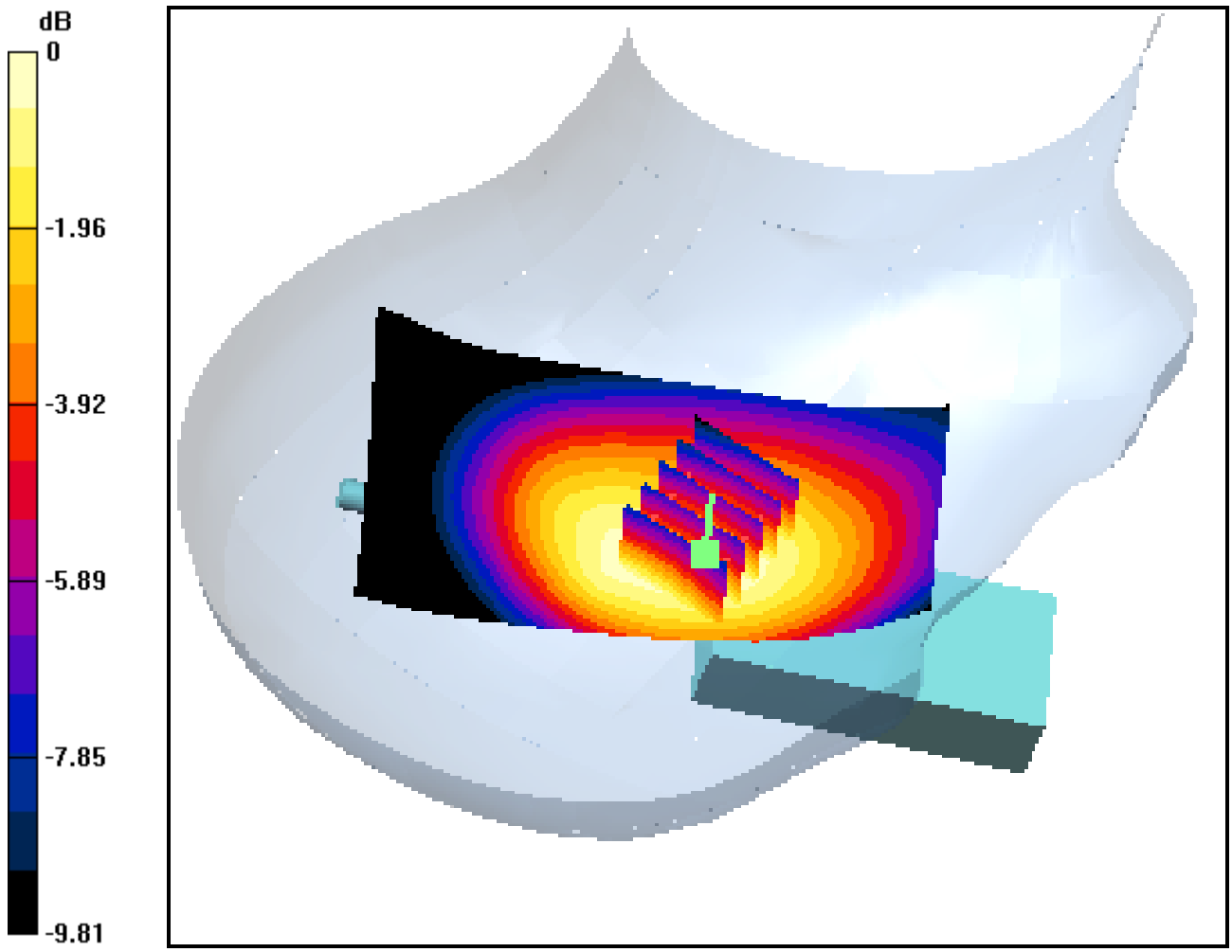

0 dB = 0.371mW/g

DIGITAL EMC CO., LTD

DUT: VK250C_slide up; Type: Tri-mode; Serial: FCC #2

Communication System: FCC AMPS; Frequency: 848.97 MHz;Duty Cycle: 1:1
Medium parameters used (interpolated): f = 848.97 MHz; σ = 0.927 mho/m; ε_r = 42.9; ρ = 1000 kg/m^3
Phantom section: Right Section

DASY4 Configuration:
Probe: ET3DV6 - SN1702; ConvF(6.52, 6.52, 6.52); Calibrated: 2004-02-17; Electronics: DAE3 Sn519
Phantom: SAM with 835MHz; Type: SAM; Serial: TP-1223
Measurement SW: DASY4, V4.4 Build 3; Postprocessing SW: SEMCAD, V1.8 Build 130

Date: 2004-12-18; Ambient Temp: 23.0; Tissue Temp:22.5

Right Tilt, AMPS Ch.799, Ant Out, Slide Up, Standard Battery

Area Scan (51x101x1): Measurement grid: dx=15mm, dy=15mm
Zoom Scan (5x5x7)/Cube 0: Measurement grid: dx=8mm, dy=8mm, dz=5mm
Power Drift = -0.1 dB
Peak SAR (extrapolated) = 0.324 W/kg
SAR(1 g) = 0.251 mW/g; SAR(10 g) = 0.182 mW/g

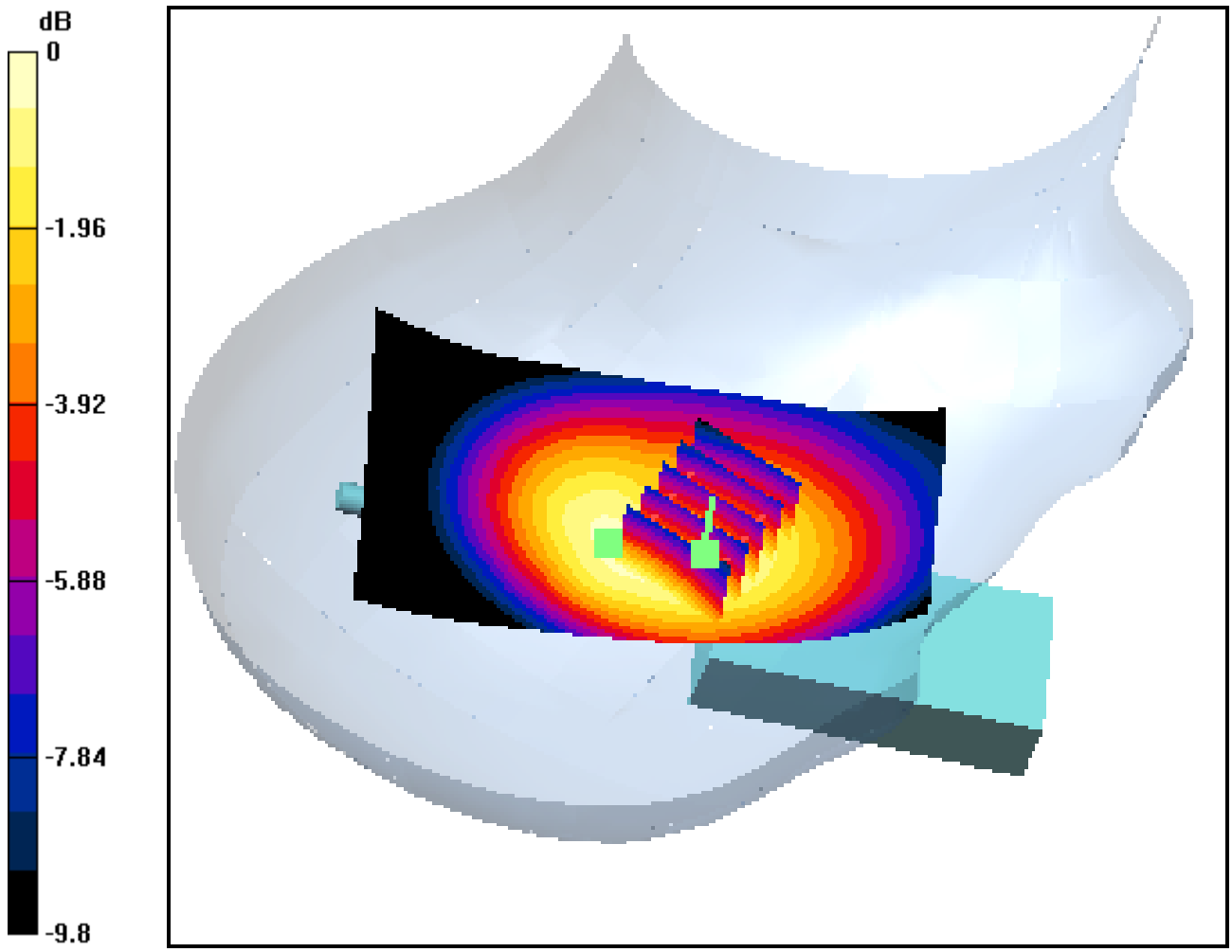

0 dB = 0.265mW/g

DIGITAL EMC CO., LTD

DUT: VK250C_slide up_ant out; Type: Tri-mode; Serial: FCC #2

Communication System: FCC AMPS; Frequency: 824.04 MHz;Duty Cycle: 1:1
Medium parameters used (interpolated): f = 824.04 MHz; σ = 0.905 mho/m; ε_r = 43.2; ρ = 1000 kg/m^3
Phantom section: Left Section

DASY4 Configuration:
Probe: ET3DV6 - SN1702; ConvF(6.52, 6.52, 6.52); Calibrated: 2004-02-17; Electronics: DAE3 Sn519
Phantom: SAM with 835MHz; Type: SAM; Serial: TP-1223
Measurement SW: DASY4, V4.4 Build 3; Postprocessing SW: SEMCAD, V1.8 Build 130

Date: 2004-12-18; Ambient Temp: 23.0; Tissue Temp:22.3

Left Touch, AMPS Ch.991, Ant Out, Slide Up, Standard Battery

Area Scan (51x101x1): Measurement grid: dx=15mm, dy=15mm
Zoom Scan (5x5x7)/Cube 0: Measurement grid: dx=8mm, dy=8mm, dz=5mm
Power Drift = -0.2 dB
Peak SAR (extrapolated) = 1.2 W/kg
SAR(1 g) = 0.910 mW/g; SAR(10 g) = 0.655 mW/g

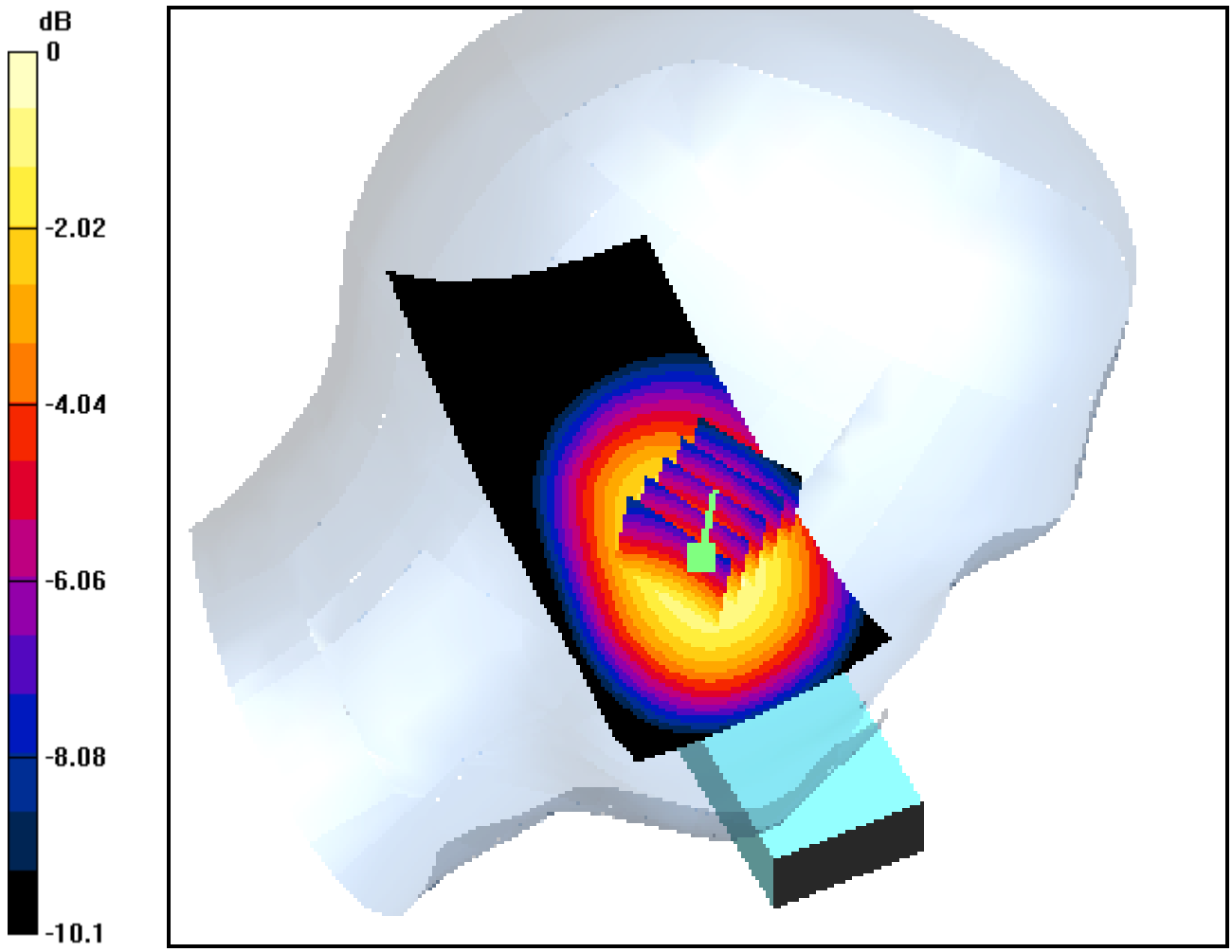

0 dB = 0.969mW/g

DIGITAL EMC CO., LTD

DUT: VK250C_slide up_ant out; Type: Tri-mode; Serial: FCC #2

Communication System: FCC AMPS; Frequency: 835.89 MHz;Duty Cycle: 1:1
Medium parameters used (interpolated): f = 835.89 MHz; σ = 0.914 mho/m; ε_r = 43; ρ = 1000 kg/m^3
Phantom section: Left Section

DASY4 Configuration:
Probe: ET3DV6 - SN1702; ConvF(6.52, 6.52, 6.52); Calibrated: 2004-02-17; Electronics: DAE3 Sn519
Phantom: SAM with 835MHz; Type: SAM; Serial: TP-1223
Measurement SW: DASY4, V4.4 Build 3; Postprocessing SW: SEMCAD, V1.8 Build 130

Date: 2004-12-18; Ambient Temp: 23.0; Tissue Temp:22.3

Left Touch, AMPS Ch.363, Ant Out, Slide Up, Standard Battery

Area Scan (51x101x1): Measurement grid: dx=15mm, dy=15mm
Zoom Scan (5x5x7)/Cube 0: Measurement grid: dx=8mm, dy=8mm, dz=5mm
Power Drift = -0.2 dB
Peak SAR (extrapolated) = 0.916 W/kg
SAR(1 g) = 0.694 mW/g; SAR(10 g) = 0.499 mW/g

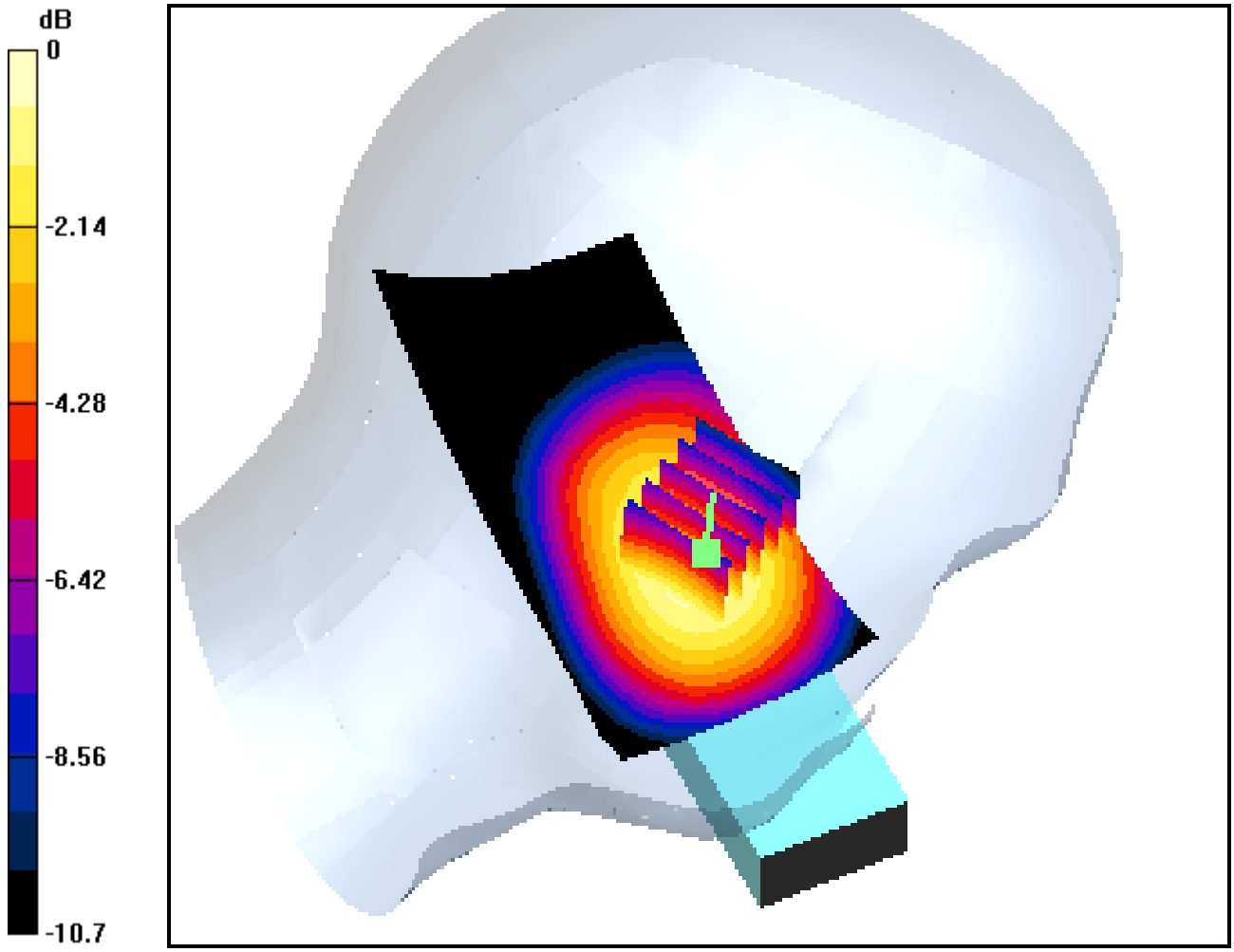

0 dB = 0.728mW/g

DIGITAL EMC CO., LTD

DUT: VK250C_slide up_ant out; Type: Tri-mode; Serial: FCC #2

Communication System: FCC AMPS; Frequency: 848.97 MHz;Duty Cycle: 1:1
Medium parameters used (interpolated): f = 848.97 MHz; σ = 0.927 mho/m; ε_r = 42.9; ρ = 1000 kg/m^3
Phantom section: Left Section

DASY4 Configuration:
Probe: ET3DV6 - SN1702; ConvF(6.52, 6.52, 6.52); Calibrated: 2004-02-17; Electronics: DAE3 Sn519
Phantom: SAM with 835MHz; Type: SAM; Serial: TP-1223
Measurement SW: DASY4, V4.4 Build 3; Postprocessing SW: SEMCAD, V1.8 Build 130

Date: 2004-12-18; Ambient Temp: 23.0; Tissue Temp:22.3

Left Touch, AMPS Ch.799, Ant Out, Slide Up, Standard Battery

Area Scan (51x101x1): Measurement grid: dx=15mm, dy=15mm
Zoom Scan (5x5x7)/Cube 0: Measurement grid: dx=8mm, dy=8mm, dz=5mm
Power Drift = -0.1 dB
Peak SAR (extrapolated) = 0.741 W/kg
SAR(1 g) = 0.563 mW/g; SAR(10 g) = 0.402 mW/g

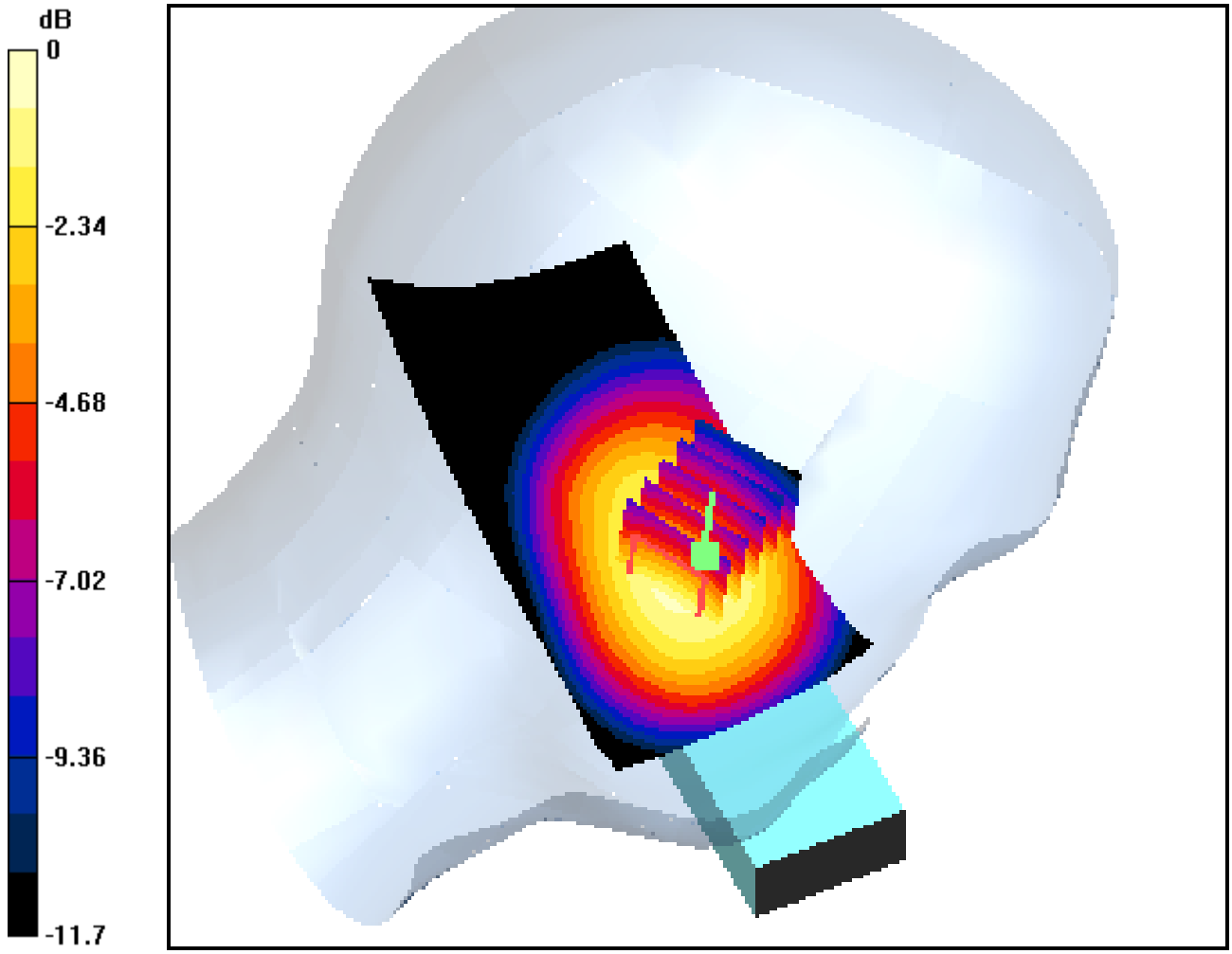

0 dB = 0.589mW/g

DIGITAL EMC CO., LTD

DUT: VK250C_slide up_ant out; Type: Tri-mode; Serial: FCC #2

Communication System: FCC AMPS; Frequency: 824.04 MHz;Duty Cycle: 1:1
Medium parameters used (interpolated): f = 824.04 MHz; σ = 0.905 mho/m; ε_r = 43.2; ρ = 1000 kg/m^3
Phantom section: Left Section

DASY4 Configuration:
Probe: ET3DV6 - SN1702; ConvF(6.52, 6.52, 6.52); Calibrated: 2004-02-17; Electronics: DAE3 Sn519
Phantom: SAM with 835MHz; Type: SAM; Serial: TP-1223
Measurement SW: DASY4, V4.4 Build 3; Postprocessing SW: SEMCAD, V1.8 Build 130

Date: 2004-12-18; Ambient Temp: 23.0; Tissue Temp:22.3

Left Tilt, AMPS Ch.991, Ant Out, Slide Up, Standard Battery

Area Scan (51x101x1): Measurement grid: dx=15mm, dy=15mm
Zoom Scan (5x5x7)/Cube 0: Measurement grid: dx=8mm, dy=8mm, dz=5mm
Power Drift = -0.2 dB
Peak SAR (extrapolated) = 0.606 W/kg
SAR(1 g) = 0.466 mW/g; SAR(10 g) = 0.338 mW/g

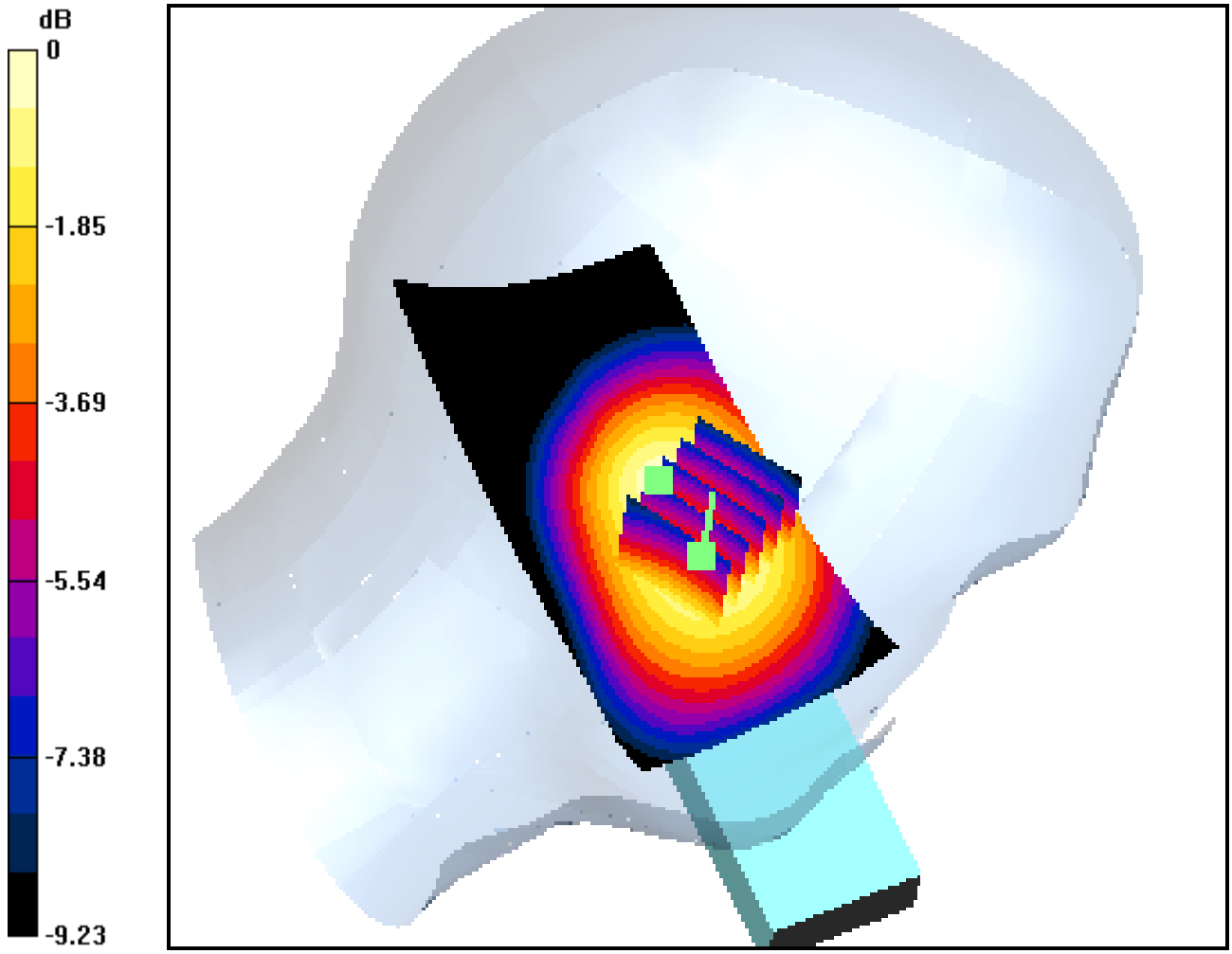

0 dB = 0.495mW/g

DIGITAL EMC CO., LTD

DUT: VK250C_slide up_ant out; Type: Tri-mode; Serial: FCC #2

Communication System: FCC AMPS; Frequency: 835.89 MHz;Duty Cycle: 1:1
Medium parameters used (interpolated): f = 835.89 MHz; σ = 0.914 mho/m; ε_r = 43; ρ = 1000 kg/m^3
Phantom section: Left Section

DASY4 Configuration:
Probe: ET3DV6 - SN1702; ConvF(6.52, 6.52, 6.52); Calibrated: 2004-02-17; Electronics: DAE3 Sn519
Phantom: SAM with 835MHz; Type: SAM; Serial: TP-1223
Measurement SW: DASY4, V4.4 Build 3; Postprocessing SW: SEMCAD, V1.8 Build 130

Date: 2004-12-18; Ambient Temp: 23.0; Tissue Temp:22.3

Left Tilt, AMPS Ch.363, Ant Out, Slide Up, Standard Battery

Area Scan (51x101x1): Measurement grid: dx=15mm, dy=15mm
Zoom Scan (5x5x7)/Cube 0: Measurement grid: dx=8mm, dy=8mm, dz=5mm
Power Drift = -0.1 dB
Peak SAR (extrapolated) = 0.536 W/kg
SAR(1 g) = 0.409 mW/g; SAR(10 g) = 0.295 mW/g

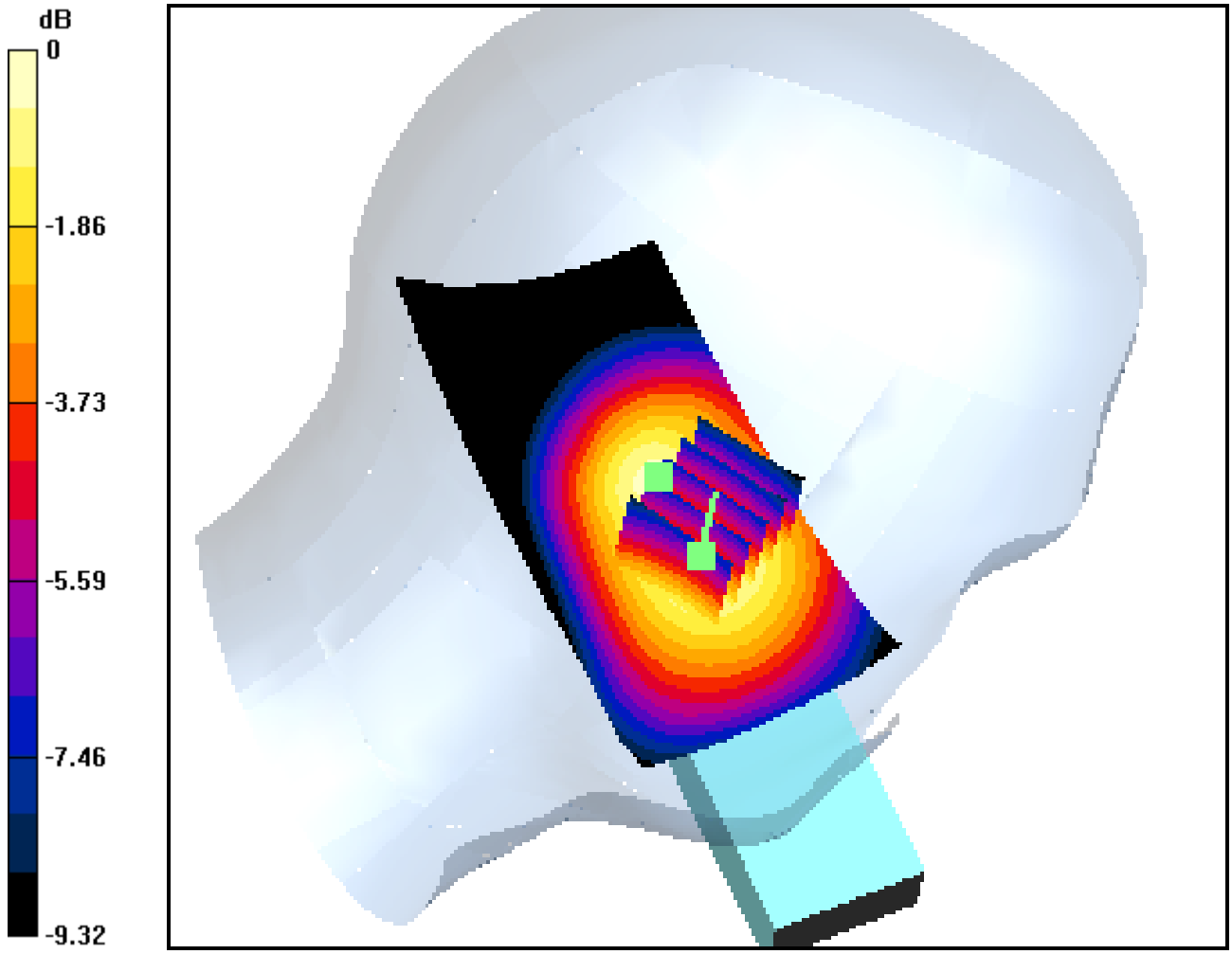

0 dB = 0.435mW/g

DIGITAL EMC CO., LTD

DUT: VK250C_slide up_ant out; Type: Tri-mode; Serial: FCC #2

Communication System: FCC AMPS; Frequency: 848.97 MHz;Duty Cycle: 1:1
Medium parameters used (interpolated): f = 848.97 MHz; σ = 0.927 mho/m; ε_r = 42.9; ρ = 1000 kg/m^3
Phantom section: Left Section

DASY4 Configuration:
Probe: ET3DV6 - SN1702; ConvF(6.52, 6.52, 6.52); Calibrated: 2004-02-17; Electronics: DAE3 Sn519
Phantom: SAM with 835MHz; Type: SAM; Serial: TP-1223
Measurement SW: DASY4, V4.4 Build 3; Postprocessing SW: SEMCAD, V1.8 Build 130

Date: 2004-12-18; Ambient Temp: 23.0; Tissue Temp:22.3

Left Tilt, AMPS Ch.799, Ant Out, Slide Up, Standard Battery

Area Scan (51x101x1): Measurement grid: dx=15mm, dy=15mm
Zoom Scan (5x5x7)/Cube 0: Measurement grid: dx=8mm, dy=8mm, dz=5mm
Power Drift = -0.1 dB
Peak SAR (extrapolated) = 0.462 W/kg
SAR(1 g) = 0.271 mW/g; SAR(10 g) = 0.182 mW/g

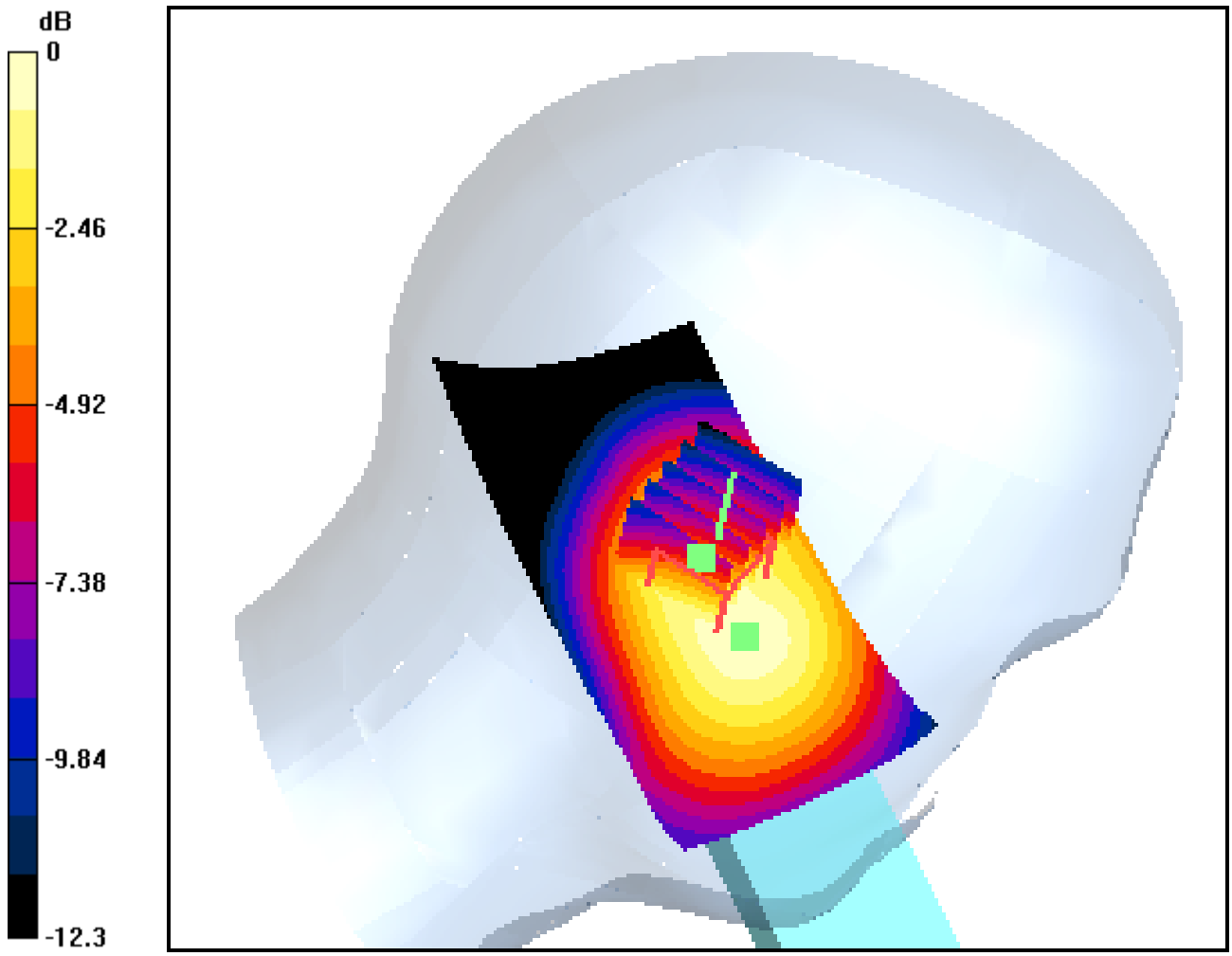

0 dB = 0.301mW/g

DIGITAL EMC CO., LTD

DUT: VK250C; Type: Tri-mode; Serial: FCC #2

Communication System: FCC AMPS; Frequency: 824.04 MHz;Duty Cycle: 1:1
Medium parameters used (interpolated): f = 824.04 MHz; σ = 0.998 mho/m; ε_r = 54.6; ρ = 1000 kg/m^3
Phantom section: Flat Section

DASY4 Configuration:
Probe: ET3DV6 - SN1702; ConvF(6.3, 6.3, 6.3); Calibrated: 2004-02-17; Electronics: DAE3 Sn519
Phantom: SAM with 835MHz; Type: SAM; Serial: TP-1223
Measurement SW: DASY4, V4.4 Build 3; Postprocessing SW: SEMCAD, V1.8 Build 130

Test Date: 2004-12-30; Ambient Temp: 23.0; Tissue Temp: 22.1

1.5cm from Body, AMPS Ch.991, Ant In, Slide Down, Standard Battery

Area Scan (51x101x1): Measurement grid: dx=15mm, dy=15mm
Zoom Scan (5x5x7)/Cube 0: Measurement grid: dx=8mm, dy=8mm, dz=5mm
Power Drift = -0.1 dB
Peak SAR (extrapolated) = 1.66 W/kg
SAR(1 g) = 1.06 mW/g; SAR(10 g) = 0.718 mW/g

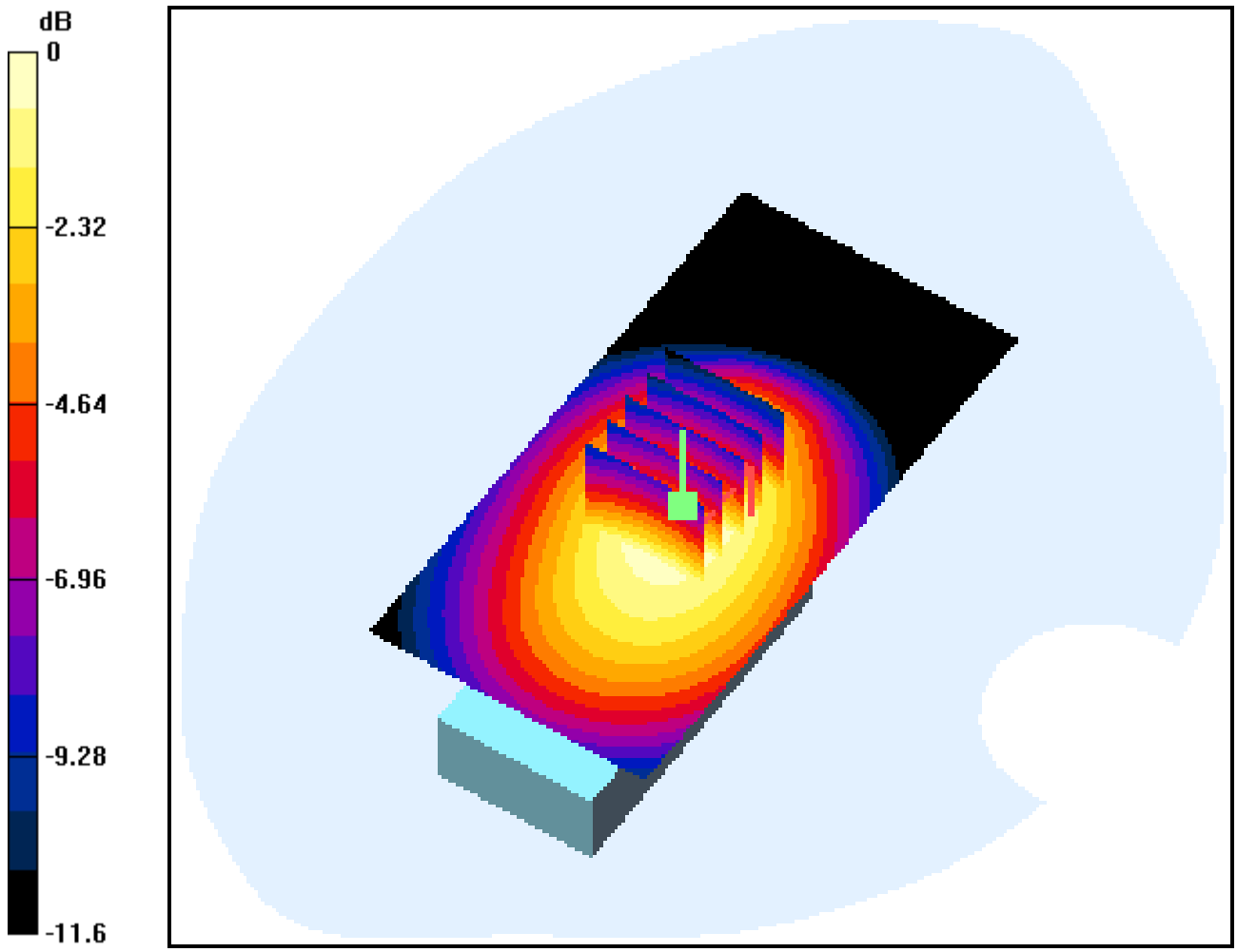

0 dB = 1.12mW/g

DIGITAL EMC CO., LTD

DUT: VK250C; Type: Tri-mode; Serial: FCC #2

Communication System: FCC AMPS; Frequency: 835.89 MHz;Duty Cycle: 1:1
Medium parameters used (interpolated): f = 835.89 MHz; σ = 1.01 mho/m; ε_r = 54.5; ρ = 1000 kg/m^3
Phantom section: Flat Section

DASY4 Configuration:
Probe: ET3DV6 - SN1702; ConvF(6.3, 6.3, 6.3); Calibrated: 2004-02-17; Electronics: DAE3 Sn519
Phantom: SAM with 835MHz; Type: SAM; Serial: TP-1223
Measurement SW: DASY4, V4.4 Build 3; Postprocessing SW: SEMCAD, V1.8 Build 130

Test Date: 2004-12-30; Ambient Temp: 23.0; Tissue Temp: 22.1

1.5cm from Body, AMPS Ch.363, Ant In, Slide Down, Standard Battery

Area Scan (51x101x1): Measurement grid: dx=15mm, dy=15mm
Zoom Scan (5x5x7)/Cube 0: Measurement grid: dx=8mm, dy=8mm, dz=5mm
Power Drift = -0.2 dB
Peak SAR (extrapolated) = 1.66 W/kg
SAR(1 g) = 1.05 mW/g; SAR(10 g) = 0.713 mW/g

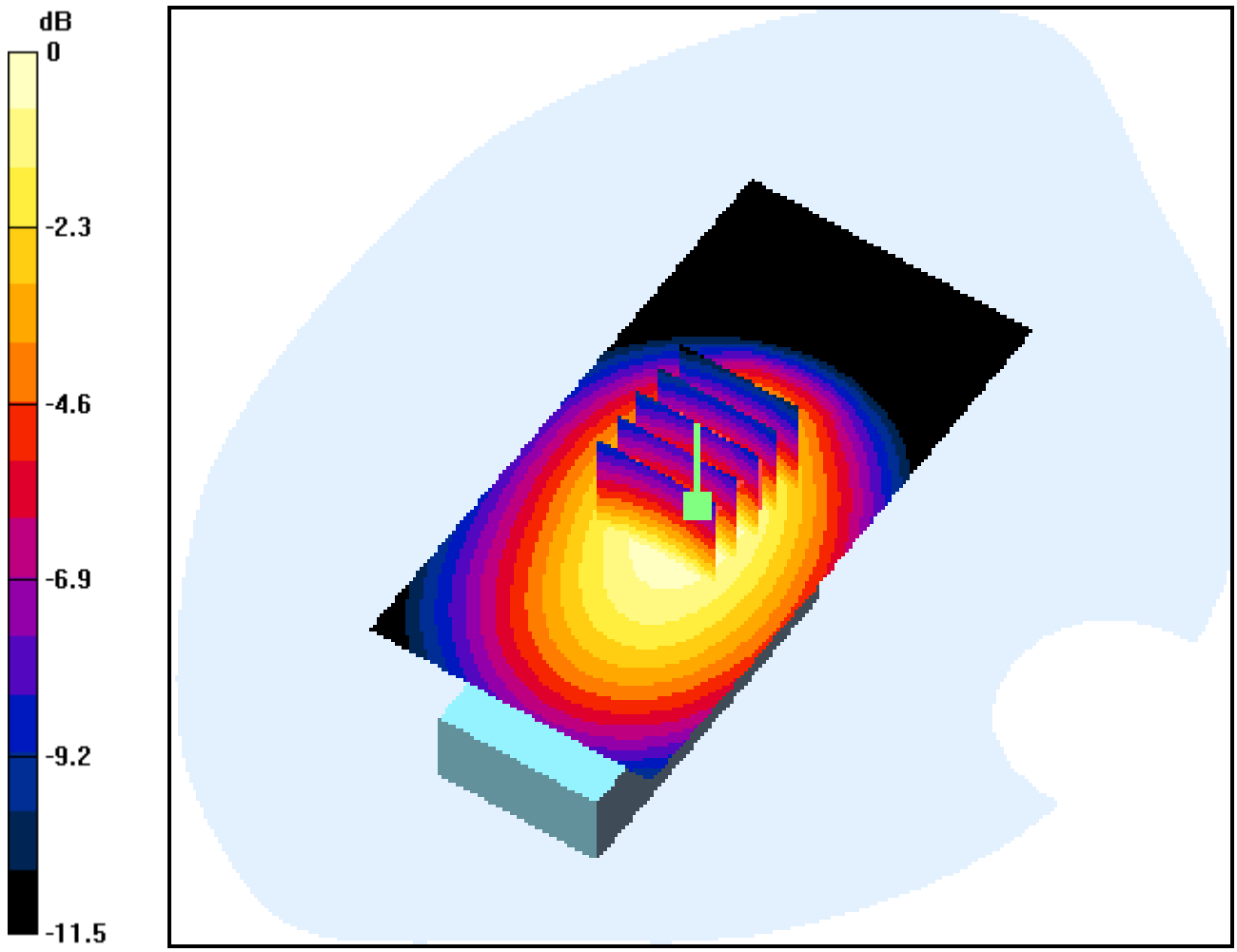

0 dB = 1.11mW/g

DIGITAL EMC CO., LTD

DUT: VK250C; Type: Tri-mode; Serial: FCC #2

Communication System: FCC AMPS; Frequency: 848.97 MHz;Duty Cycle: 1:1
Medium parameters used (interpolated): f = 848.97 MHz; σ = 1.02 mho/m; ε_r = 54.3; ρ = 1000 kg/m^3
Phantom section: Flat Section

DASY4 Configuration:
Probe: ET3DV6 - SN1702; ConvF(6.3, 6.3, 6.3); Calibrated: 2004-02-17; Electronics: DAE3 Sn519
Phantom: SAM with 835MHz; Type: SAM; Serial: TP-1223
Measurement SW: DASY4, V4.4 Build 3; Postprocessing SW: SEMCAD, V1.8 Build 130

Test Date: 2004-12-30; Ambient Temp: 23.0; Tissue Temp: 22.1

1.5cm from Body, AMPS Ch.799, Ant In, Slide Down, Standard Battery

Area Scan (51x101x1): Measurement grid: dx=15mm, dy=15mm
Zoom Scan (5x5x7)/Cube 0: Measurement grid: dx=8mm, dy=8mm, dz=5mm
Power Drift = -0.3 dB
Peak SAR (extrapolated) = 1.57 W/kg
SAR(1 g) = 0.996 mW/g; SAR(10 g) = 0.675 mW/g

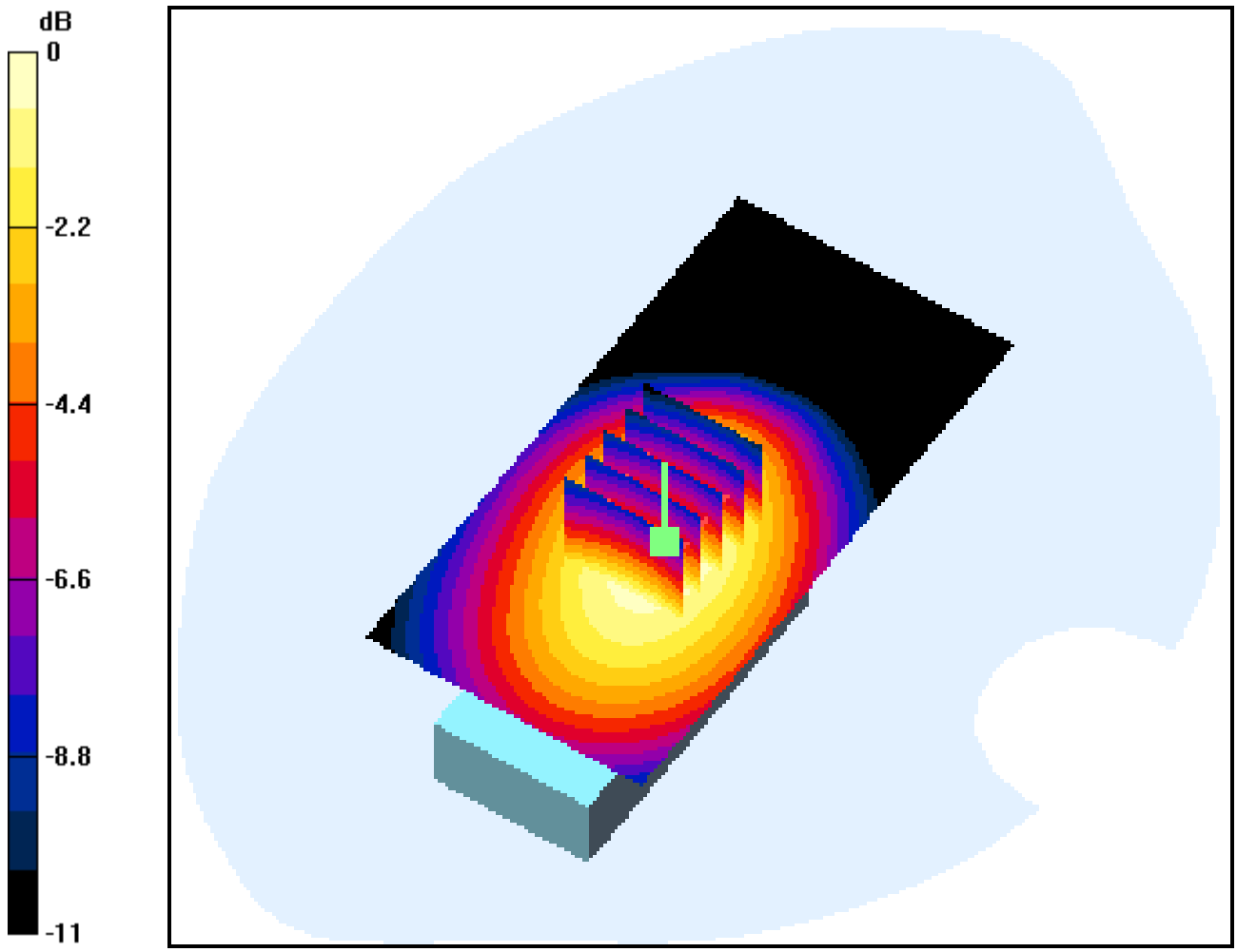

0 dB = 1.05mW/g

DIGITAL EMC CO., LTD

DUT: VK250C; Type: Tri-mode; Serial: FCC #2

Communication System: FCC AMPS; Frequency: 824.04 MHz;Duty Cycle: 1:1
Medium parameters used (interpolated): f = 824.04 MHz; σ = 0.998 mho/m; ε_r = 54.6; ρ = 1000 kg/m^3
Phantom section: Flat Section

DASY4 Configuration:
Probe: ET3DV6 - SN1702; ConvF(6.3, 6.3, 6.3); Calibrated: 2004-02-17; Electronics: DAE3 Sn519
Phantom: SAM with 835MHz; Type: SAM; Serial: TP-1223
Measurement SW: DASY4, V4.4 Build 3; Postprocessing SW: SEMCAD, V1.8 Build 130

Test Date: 2004-12-30; Ambient Temp: 23.0; Tissue Temp: 22.1

1.5cm from Body, AMPS Ch.991, Ant Out, Slide Down, Standard Battery

Area Scan (51x111x1): Measurement grid: dx=15mm, dy=15mm
Zoom Scan (5x5x7)/Cube 0: Measurement grid: dx=8mm, dy=8mm, dz=5mm
Power Drift = -0.2 dB
Peak SAR (extrapolated) = 2.01 W/kg
SAR(1 g) = 1.26 mW/g; SAR(10 g) = 0.855 mW/g

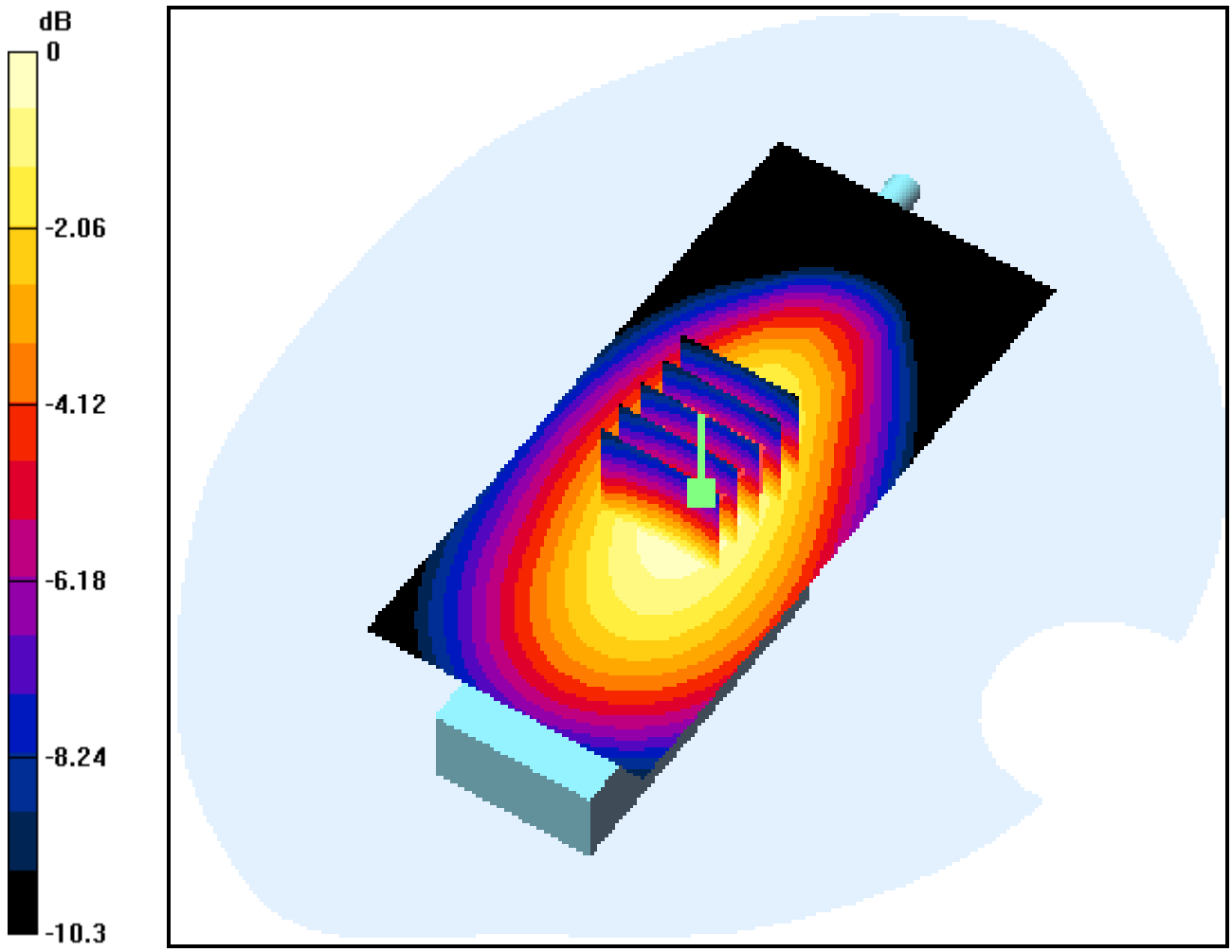

0 dB = 1.33mW/g

DIGITAL EMC CO., LTD

DUT: VK250C; Type: Tri-mode; Serial: FCC #2

Communication System: FCC AMPS; Frequency: 835.89 MHz;Duty Cycle: 1:1
Medium parameters used (interpolated): f = 835.89 MHz; σ = 1.01 mho/m; ε_r = 54.5; ρ = 1000 kg/m^3
Phantom section: Flat Section

DASY4 Configuration:
Probe: ET3DV6 - SN1702; ConvF(6.3, 6.3, 6.3); Calibrated: 2004-02-17; Electronics: DAE3 Sn519
Phantom: SAM with 835MHz; Type: SAM; Serial: TP-1223
Measurement SW: DASY4, V4.4 Build 3; Postprocessing SW: SEMCAD, V1.8 Build 130

Test Date: 2004-12-30; Ambient Temp: 23.0; Tissue Temp: 22.1

1.5cm from Body, AMPS Ch.363, Ant Out, Slide Down, Standard Battery

Area Scan (51x111x1): Measurement grid: dx=15mm, dy=15mm
Zoom Scan (5x5x7)/Cube 0: Measurement grid: dx=8mm, dy=8mm, dz=5mm
Power Drift = -0.1 dB
Peak SAR (extrapolated) = 2 W/kg
SAR(1 g) = 1.26 mW/g; SAR(10 g) = 0.855 mW/g

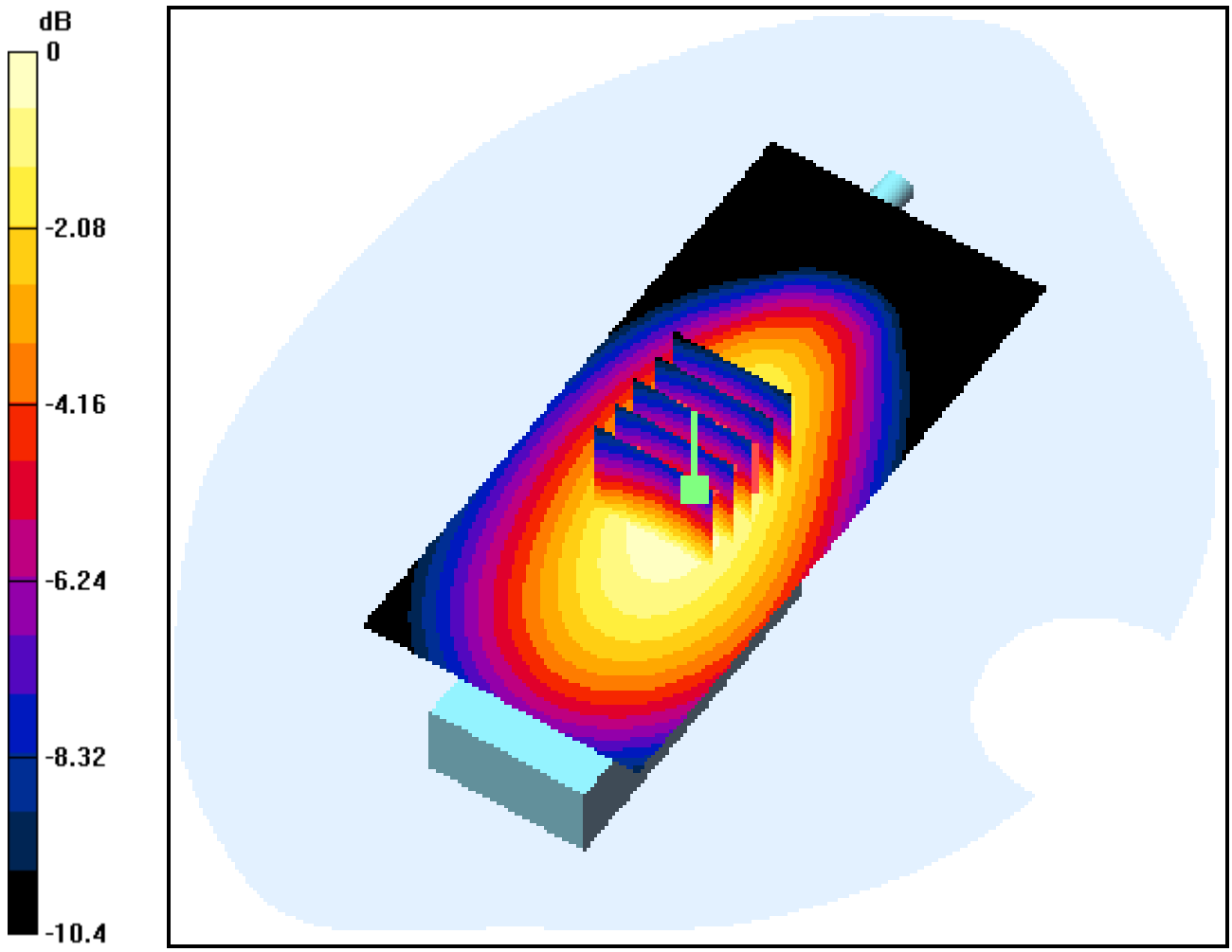

0 dB = 1.33mW/g

DIGITAL EMC CO., LTD

DUT: VK250C; Type: Tri-mode; Serial: FCC #2

Communication System: FCC AMPS; Frequency: 848.97 MHz;Duty Cycle: 1:1
Medium parameters used (interpolated): f = 848.97 MHz; σ = 1.02 mho/m; ε_r = 54.3; ρ = 1000 kg/m^3
Phantom section: Flat Section

DASY4 Configuration:
Probe: ET3DV6 - SN1702; ConvF(6.3, 6.3, 6.3); Calibrated: 2004-02-17; Electronics: DAE3 Sn519
Phantom: SAM with 835MHz; Type: SAM; Serial: TP-1223
Measurement SW: DASY4, V4.4 Build 3; Postprocessing SW: SEMCAD, V1.8 Build 130

Test Date: 2004-12-30; Ambient Temp: 23.0; Tissue Temp: 22.1

1.5cm from Body, AMPS Ch.799, Ant Out, Slide Down, Standard Battery

Area Scan (51x111x1): Measurement grid: dx=15mm, dy=15mm
Zoom Scan (5x5x7)/Cube 0: Measurement grid: dx=8mm, dy=8mm, dz=5mm
Power Drift = 0.2 dB
Peak SAR (extrapolated) = 1.96 W/kg
SAR(1 g) = 1.25 mW/g; SAR(10 g) = 0.854 mW/g

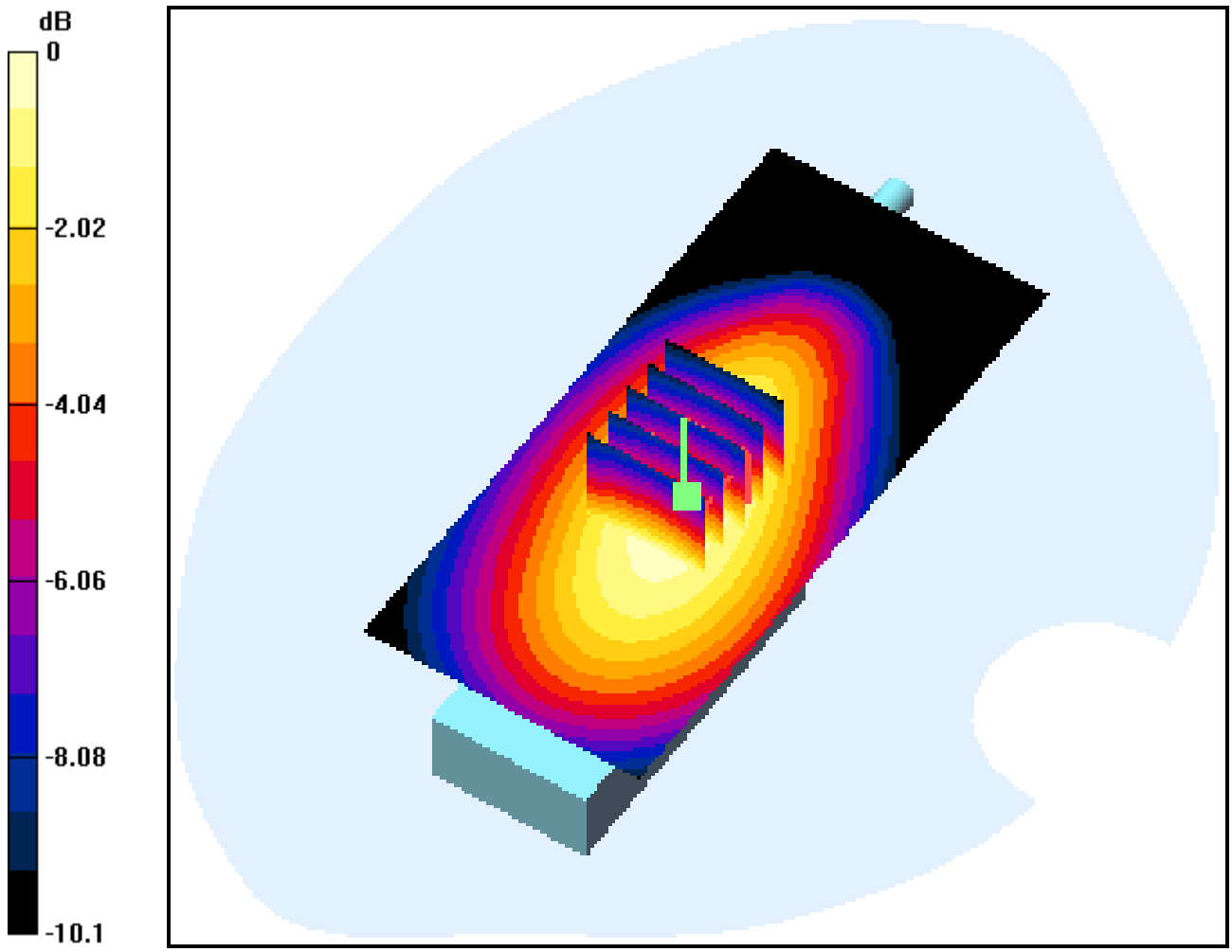

0 dB = 1.32mW/g

DIGITAL EMC CO., LTD

DUT: VK250C; Type: Tri-mode; Serial: FCC #2

Communication System: FCC AMPS; Frequency: 824.04 MHz;Duty Cycle: 1:1
Medium parameters used (interpolated): f = 824.04 MHz; σ = 0.998 mho/m; ε_r = 54.6; ρ = 1000 kg/m^3
Phantom section: Flat Section

DASY4 Configuration:
Probe: ET3DV6 - SN1702; ConvF(6.3, 6.3, 6.3); Calibrated: 2004-02-17; Electronics: DAE3 Sn519
Phantom: SAM with 835MHz; Type: SAM; Serial: TP-1223
Measurement SW: DASY4, V4.4 Build 3; Postprocessing SW: SEMCAD, V1.8 Build 130

Test Date: 2004-12-30; Ambient Temp: 23.0; Tissue Temp: 22.1

1.5cm from Body, AMPS Ch.991, Ant In, Slide Up, Standard Battery

Area Scan (51x101x1): Measurement grid: dx=15mm, dy=15mm
Zoom Scan (5x5x7)/Cube 0: Measurement grid: dx=8mm, dy=8mm, dz=5mm
Power Drift = -0.2 dB
Peak SAR (extrapolated) = 0.917 W/kg
SAR(1 g) = 0.562 mW/g; SAR(10 g) = 0.372 mW/g

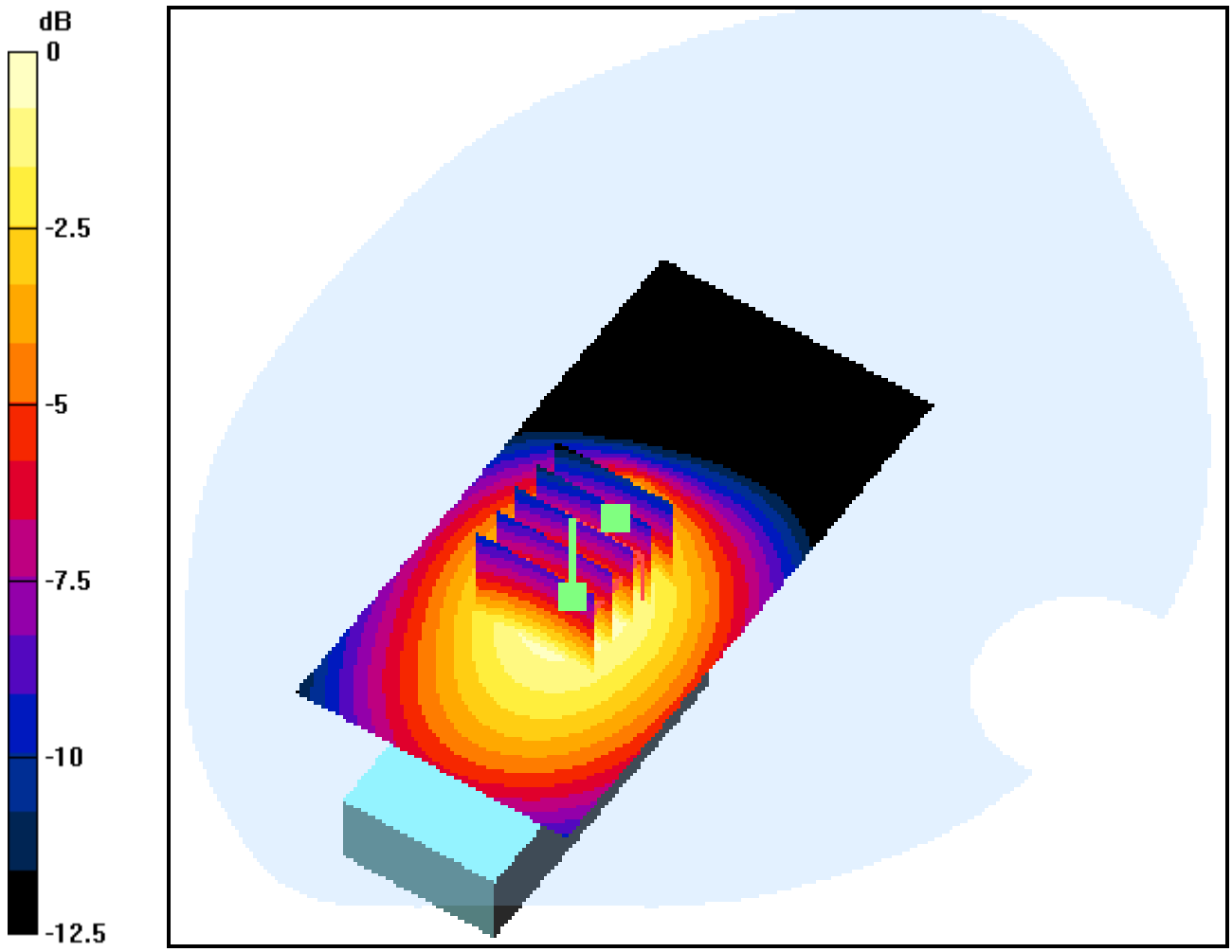

0 dB = 0.596mW/g

DIGITAL EMC CO., LTD

DUT: VK250C; Type: Tri-mode; Serial: FCC #2

Communication System: FCC AMPS; Frequency: 848.97 MHz;Duty Cycle: 1:1
Medium parameters used (interpolated): f = 848.97 MHz; σ = 1.02 mho/m; ε_r = 54.3; ρ = 1000 kg/m^3
Phantom section: Flat Section

DASY4 Configuration:
Probe: ET3DV6 - SN1702; ConvF(6.3, 6.3, 6.3); Calibrated: 2004-02-17; Electronics: DAE3 Sn519
Phantom: SAM with 835MHz; Type: SAM; Serial: TP-1223
Measurement SW: DASY4, V4.4 Build 3; Postprocessing SW: SEMCAD, V1.8 Build 130

Test Date: 2004-12-30; Ambient Temp: 23.0; Tissue Temp: 22.1

1.5cm from Body, AMPS Ch.799, Ant In, Slide Up, Standard Battery

Area Scan (51x101x1): Measurement grid: dx=15mm, dy=15mm
Zoom Scan (5x5x7)/Cube 0: Measurement grid: dx=8mm, dy=8mm, dz=5mm
Power Drift = -0.1 dB
Peak SAR (extrapolated) = 1.07 W/kg
SAR(1 g) = 0.659 mW/g; SAR(10 g) = 0.437 mW/g

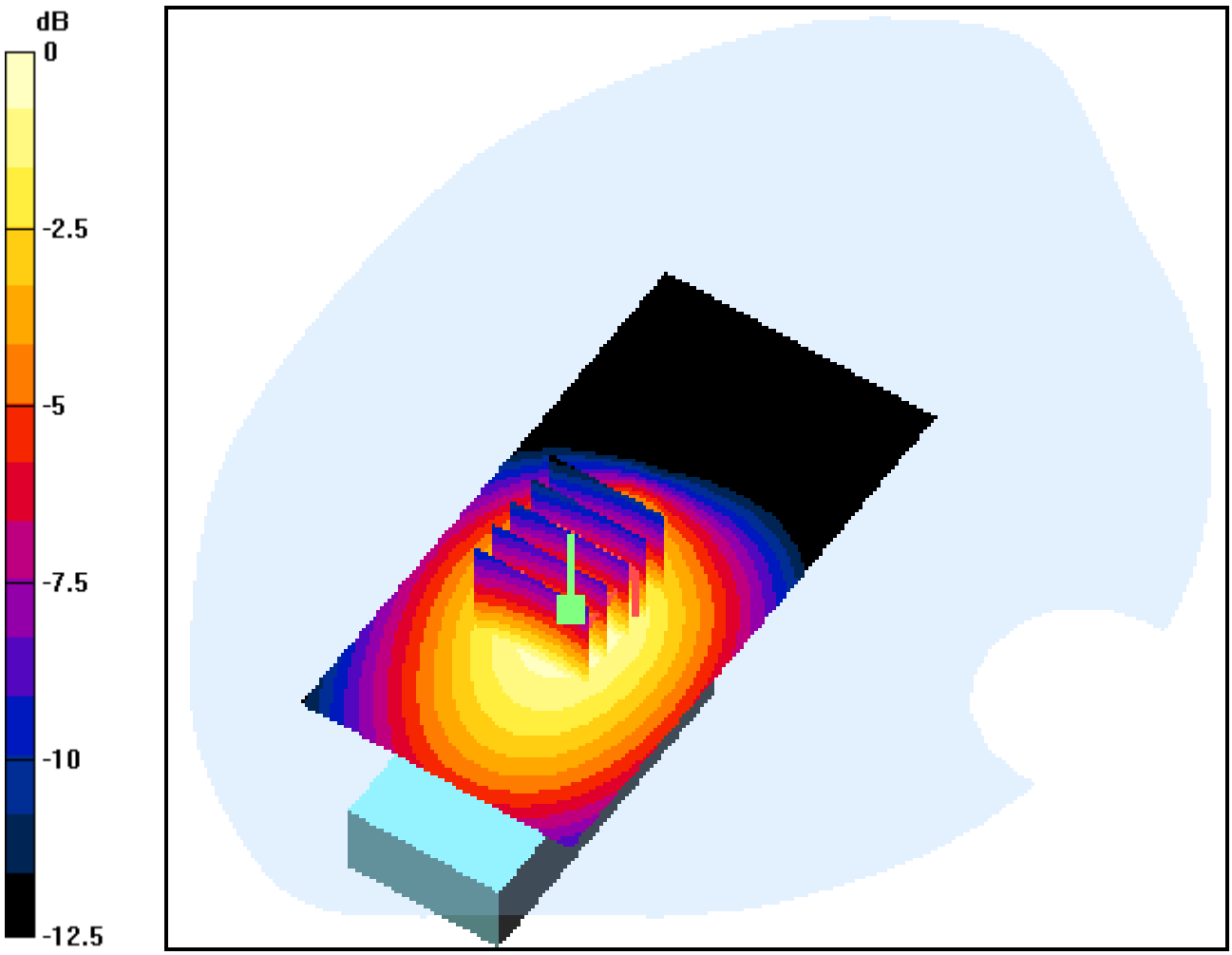

0 dB = 0.697mW/g

DIGITAL EMC CO., LTD

DUT: VK250C; Type: Tri-mode; Serial: FCC #2

Communication System: FCC AMPS; Frequency: 835.89 MHz;Duty Cycle: 1:1
Medium parameters used (interpolated): f = 835.89 MHz; σ = 1.01 mho/m; ε_r = 54.5; ρ = 1000 kg/m^3
Phantom section: Flat Section

DASY4 Configuration:
Probe: ET3DV6 - SN1702; ConvF(6.3, 6.3, 6.3); Calibrated: 2004-02-17; Electronics: DAE3 Sn519
Phantom: SAM with 835MHz; Type: SAM; Serial: TP-1223
Measurement SW: DASY4, V4.4 Build 3; Postprocessing SW: SEMCAD, V1.8 Build 130

Test Date: 2004-12-30; Ambient Temp: 23.0; Tissue Temp: 22.1

1.5cm from Body, AMPS Ch.363, Ant In, Slide Up, Standard Battery

Area Scan (51x101x1): Measurement grid: dx=15mm, dy=15mm
Zoom Scan (5x5x7)/Cube 0: Measurement grid: dx=8mm, dy=8mm, dz=5mm
Power Drift = -0.3 dB
Peak SAR (extrapolated) = 1.02 W/kg
SAR(1 g) = 0.626 mW/g; SAR(10 g) = 0.414 mW/g

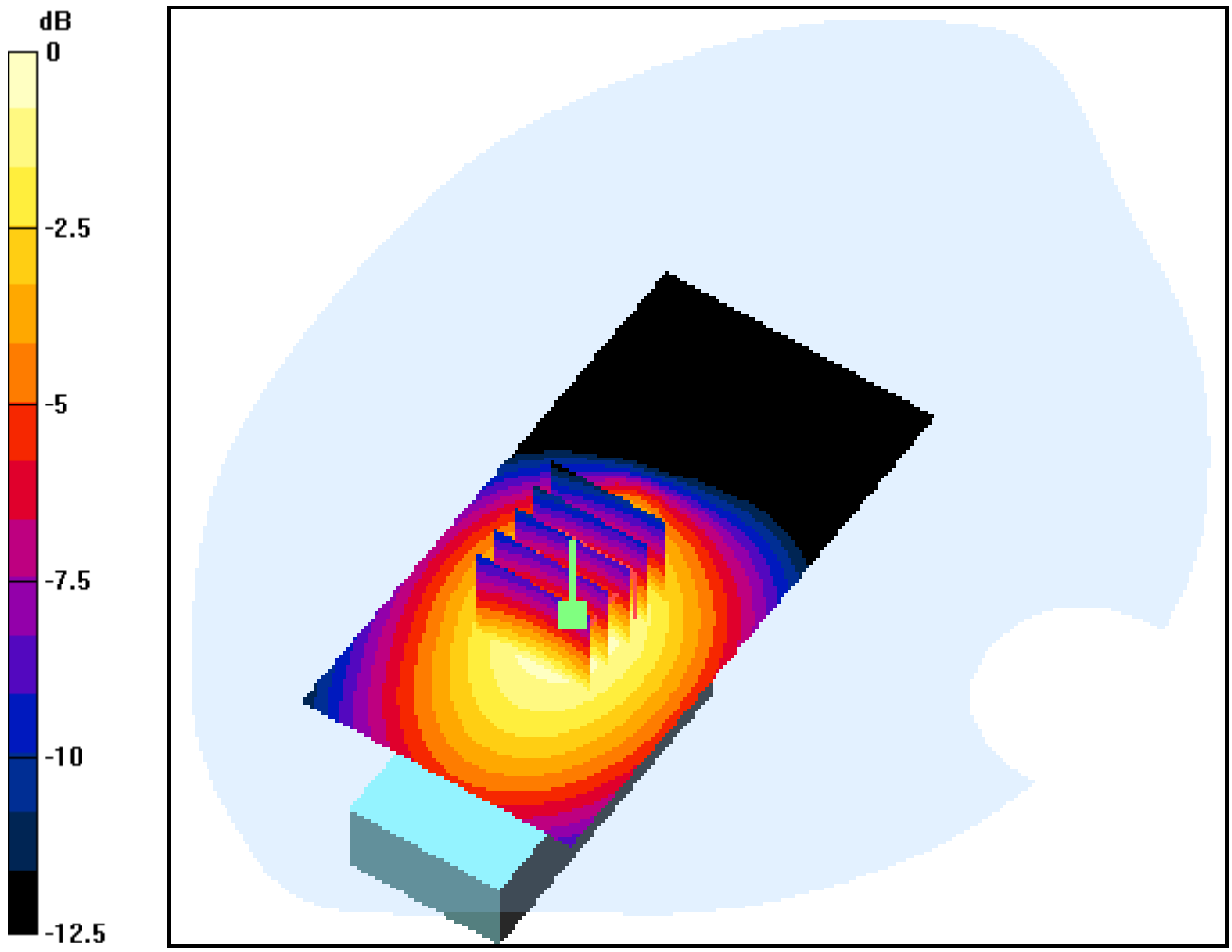

0 dB = 0.667mW/g

DIGITAL EMC CO., LTD

DUT: VK250C; Type: Tri-mode; Serial: FCC #2

Communication System: FCC AMPS; Frequency: 824.04 MHz;Duty Cycle: 1:1
Medium parameters used (interpolated): f = 824.04 MHz; σ = 0.998 mho/m; ε_r = 54.6; ρ = 1000 kg/m^3
Phantom section: Flat Section

DASY4 Configuration:
Probe: ET3DV6 - SN1702; ConvF(6.3, 6.3, 6.3); Calibrated: 2004-02-17; Electronics: DAE3 Sn519
Phantom: SAM with 835MHz; Type: SAM; Serial: TP-1223
Measurement SW: DASY4, V4.4 Build 3; Postprocessing SW: SEMCAD, V1.8 Build 130

Test Date: 2004-12-30; Ambient Temp: 23.0; Tissue Temp: 22.1

1.5cm from Body, AMPS Ch.991, Ant Out, Slide Up, Standard Battery

Area Scan (51x111x1): Measurement grid: dx=15mm, dy=15mm
Zoom Scan (5x5x7)/Cube 0: Measurement grid: dx=8mm, dy=8mm, dz=5mm
Power Drift = -0.3 dB
Peak SAR (extrapolated) = 1.74 W/kg
SAR(1 g) = 1.12 mW/g; SAR(10 g) = 0.763 mW/g

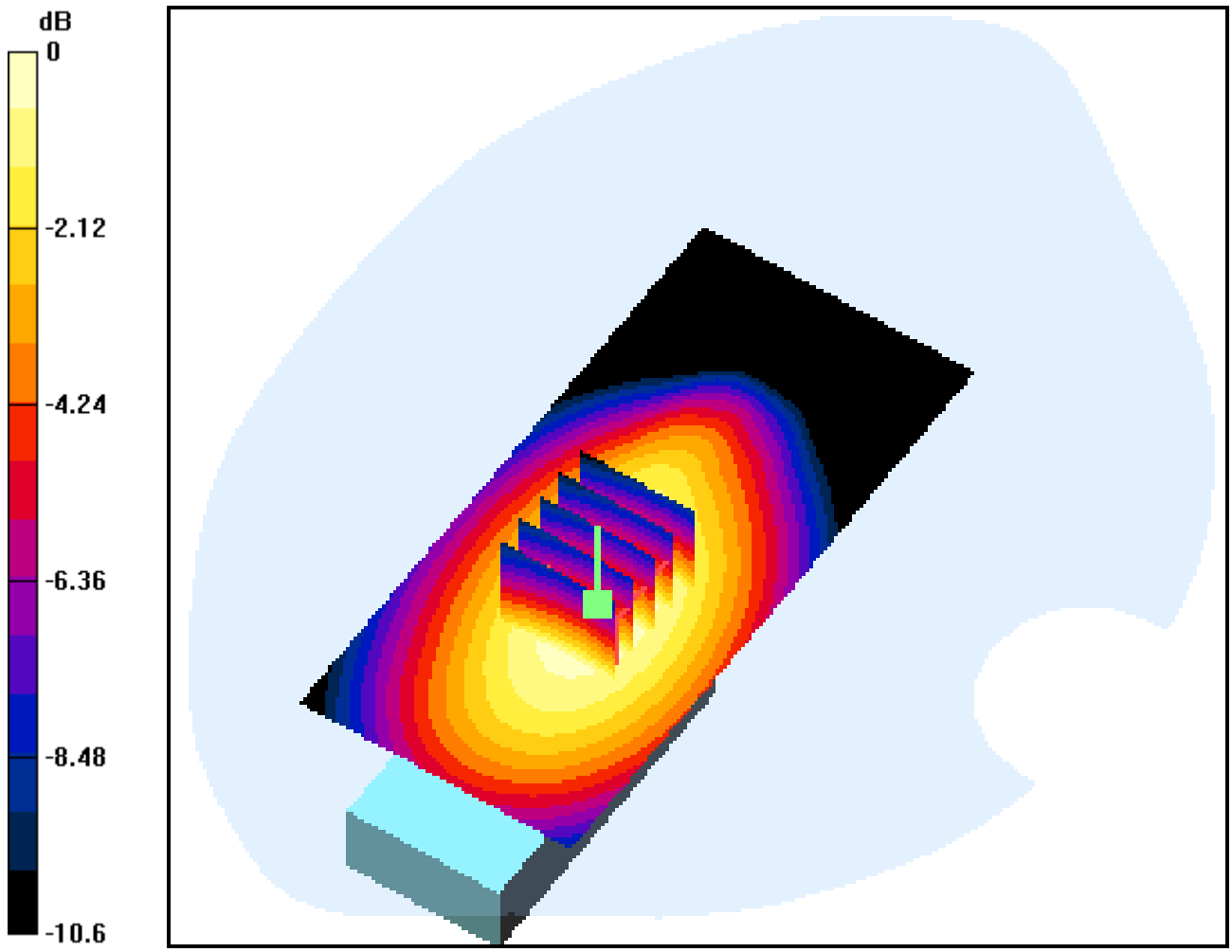

0 dB = 1.18mW/g

DIGITAL EMC CO., LTD

DUT: VK250C; Type: Tri-mode; Serial: FCC #2

Communication System: FCC AMPS; Frequency: 835.89 MHz;Duty Cycle: 1:1
Medium parameters used (interpolated): f = 835.89 MHz; σ = 1.01 mho/m; ε_r = 54.5; ρ = 1000 kg/m^3
Phantom section: Flat Section

DASY4 Configuration:
Probe: ET3DV6 - SN1702; ConvF(6.3, 6.3, 6.3); Calibrated: 2004-02-17; Electronics: DAE3 Sn519
Phantom: SAM with 835MHz; Type: SAM; Serial: TP-1223
Measurement SW: DASY4, V4.4 Build 3; Postprocessing SW: SEMCAD, V1.8 Build 130

Test Date: 2004-12-30; Ambient Temp: 23.0; Tissue Temp: 22.1

1.5cm from Body, AMPS Ch.363, Ant Out, Slide Up, Standard Battery

Area Scan (51x111x1): Measurement grid: dx=15mm, dy=15mm
Zoom Scan (5x5x7)/Cube 0: Measurement grid: dx=8mm, dy=8mm, dz=5mm
Power Drift = -0.1 dB
Peak SAR (extrapolated) = 1.74 W/kg
SAR(1 g) = 1.1 mW/g; SAR(10 g) = 0.753 mW/g

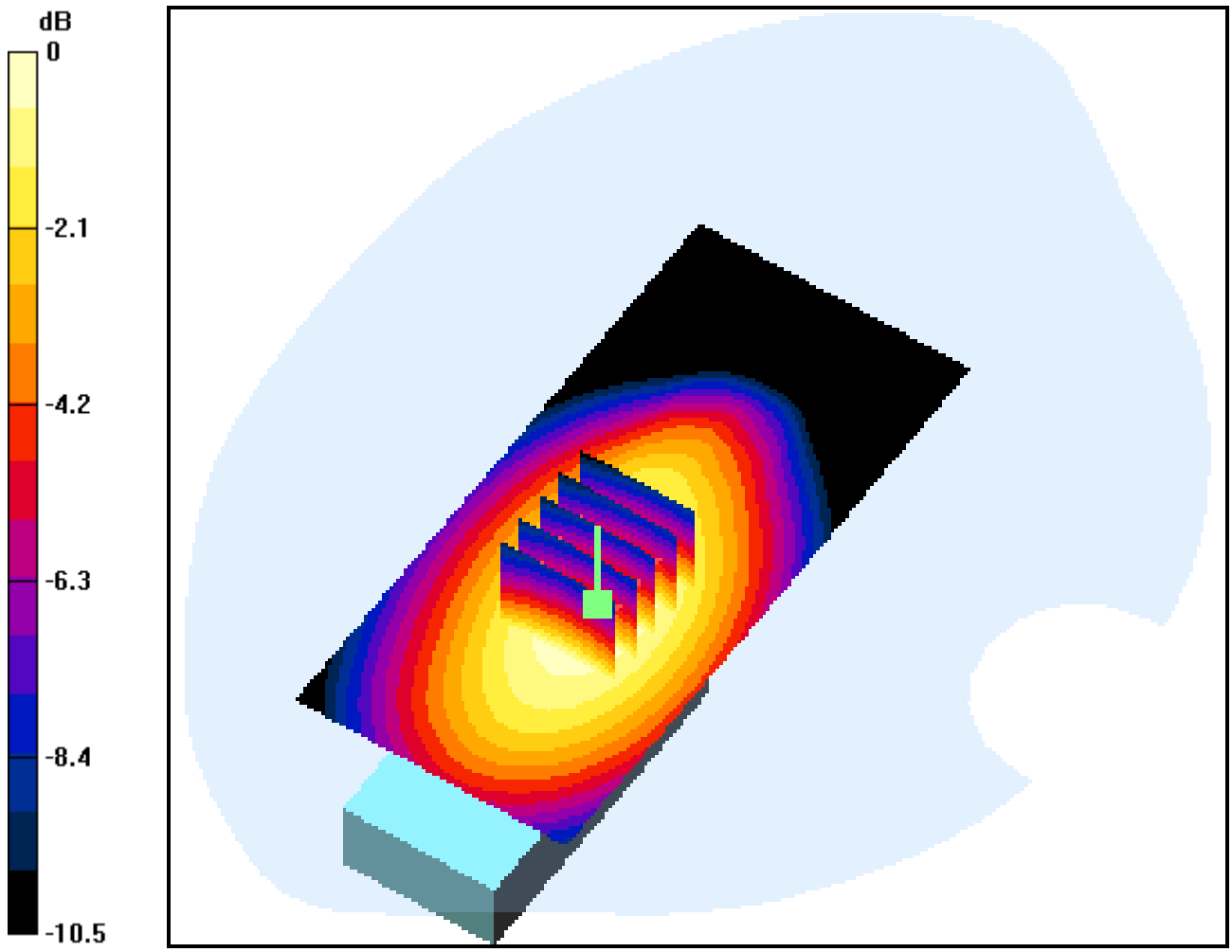

0 dB = 1.17mW/g

DIGITAL EMC CO., LTD

DUT: VK250C; Type: Tri-mode; Serial: FCC #2

Communication System: FCC AMPS; Frequency: 848.97 MHz;Duty Cycle: 1:1
Medium parameters used (interpolated): f = 848.97 MHz; σ = 1.02 mho/m; ε_r = 54.3; ρ = 1000 kg/m^3
Phantom section: Flat Section

DASY4 Configuration:
Probe: ET3DV6 - SN1702; ConvF(6.3, 6.3, 6.3); Calibrated: 2004-02-17; Electronics: DAE3 Sn519
Phantom: SAM with 835MHz; Type: SAM; Serial: TP-1223
Measurement SW: DASY4, V4.4 Build 3; Postprocessing SW: SEMCAD, V1.8 Build 130

Test Date: 2004-12-30; Ambient Temp: 23.0; Tissue Temp: 22.1

1.5cm from Body, AMPS Ch.799, Ant Out, Slide Up, Standard Battery

Area Scan (51x111x1): Measurement grid: dx=15mm, dy=15mm
Zoom Scan (5x5x7)/Cube 0: Measurement grid: dx=8mm, dy=8mm, dz=5mm
Power Drift = -0.2 dB
Peak SAR (extrapolated) = 1.09 W/kg
SAR(1 g) = 0.704 mW/g; SAR(10 g) = 0.485 mW/g

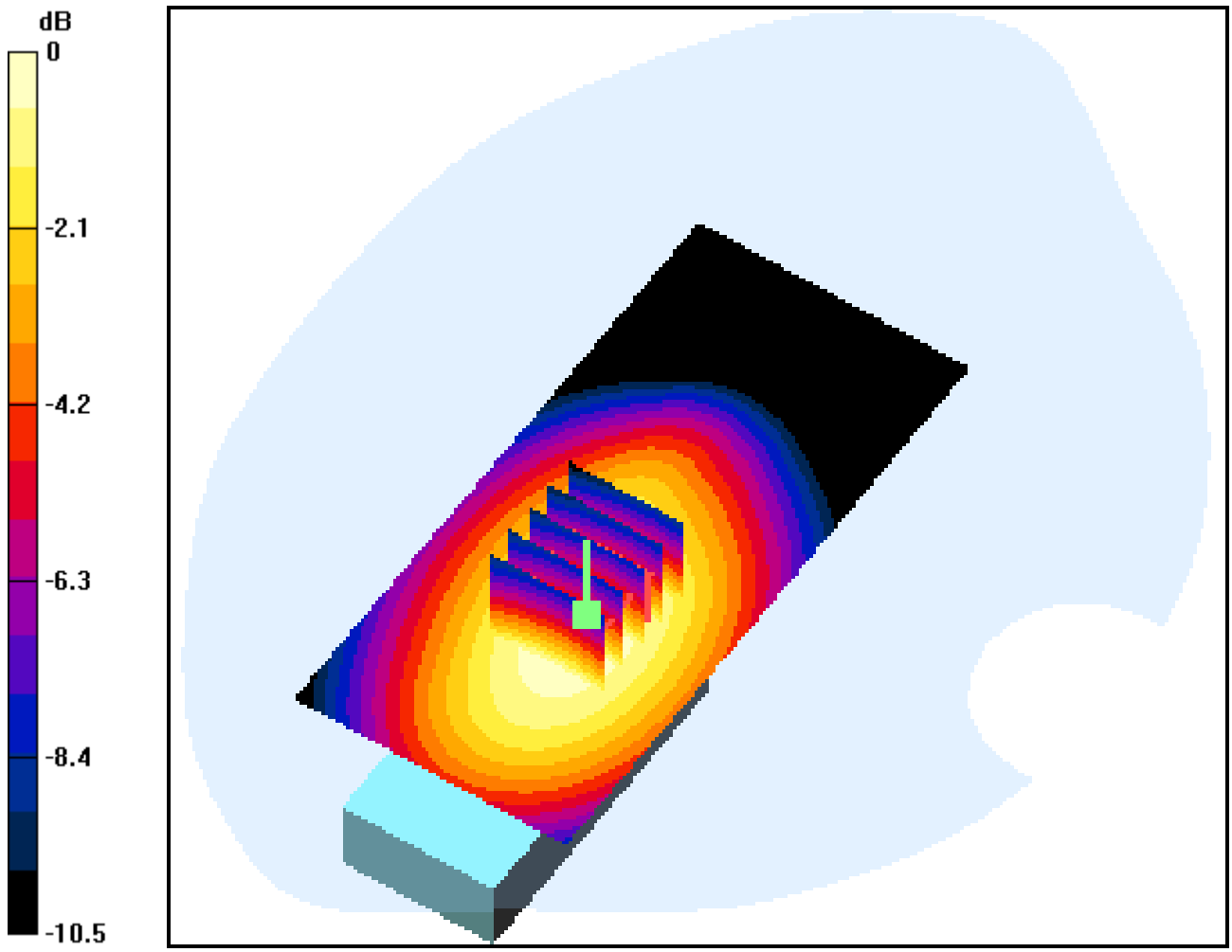

0 dB = 0.740mW/g