Features And Functions

WINPOWER

Features

The system is a video, audio and data wireless transmitting and receiving system. The sub statiom unit can combine with video generation unit (Like video camera), audio, data signal and transmitting image back to the Main station Main station than can re-generate image on the monitors or Television. Or send to Digital Video Recorder for storage, or view through Internet.

1) Long range transmitting. Can control PTZ turntable's tilt up/down, Left/Right, Lens zoom in/out, focus, Micro-adjustment.Through Controller.
2) Video and Audio signal can be transmitted one-way back to the receiver.
3) Transmitting unit can be installed outdoor, unit is water resistant.
4) The system can operate both AC/DC.
5) The system can operate 24 hours non-stop operation.
6) 3 different type of high efficiency antenna can be install with the units, for different location and environment formaximum efficiency.
7) Special design circuit prevented interference.
8) Video, Audio and data transmitting can be up to 5 KM.
9) Transmitting frequency is selectable.

Integration parts of the system

1. Video Main tation (24DM) x1
2. Video Sub station (24DS) x1
3. RS-485 cable (9 pin D-Sub, 4 meters) x1
4. Turntable control cable(D-Sub 15cm) x1
5. DC Power cable 2P 20cm x1
6. Dipole type antenna x4
7. RF cable (2.4G 1m, 900M 2m) x2
8. DC power adapter (12V 1.5 Amp)
9. Instruction manual x1
10. Optional control box(WJ-606) for CCD camera
11. Optional Spiltter Box (WJ24-8)

Names of parts and functions

Ⅰ.LRVS-24D Sub Station Unit (24DS)

1 Antenna plug.
2 Video signal in.
3 Audio signal in.
4 Alarm sensor connector.
5 Channel selector.
6 CCD lens zoom in/out

Drawing 1

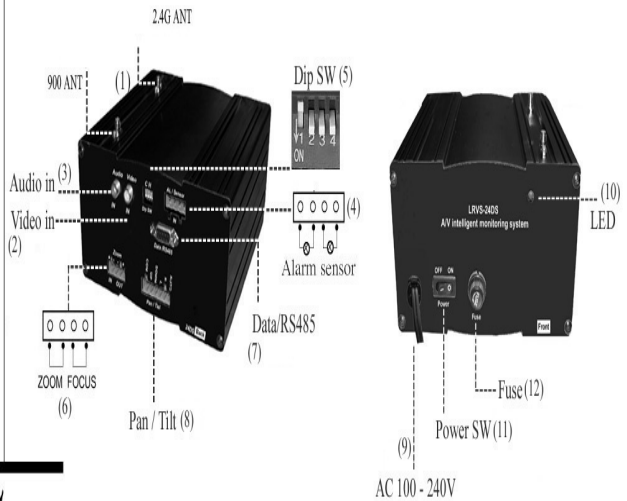

System and Accessories Installation

7 Control signal input, RS485
8 Turntable pan/tilt control signal out. Pin 1.common 2.auto 3.up 4.down 5.left 6.right
9 AC input (100V~240V)
10 Working LED
11 Power switch
12 Fuse

Dip-Swich

Frequency Table

CH	Frequency	Dip SW1	Dip SW2	Dip SW3	Dip SW4
1.	2473 MHz	OFF	ON	ON	ON
2.	2453 MHz	ON	OFF	ON	ON
3.	2434 MHz	OFF	OFF	ON	ON
4.	2411 MHz	ON	ON	OFF	ON

Ⅱ.LRVS-24D Main station Unit (24DM)

1 Antenna plug.
2 DC in. (12V) Power adapter
3 Power switch
4 Video signal out.
5 Audio signal out.
6 RS-485 interface connector.
7 Channel selector
8 Working LED
9 Alarm sensor output

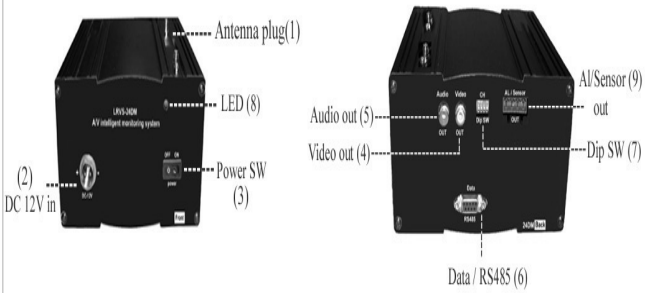

Ⅲ. Standard Control Keyboard(WJ-606)

A area

0 ~ 9	number keypad for choose working WVTS pair.
ESC	clear key for cancel error input
ENTER	confirm key to confirm working WVTS pair choosing. Press this key after input WVTS pair number.

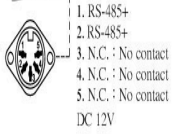

B area joystick to control rotation of pan/tilt.

C area

F1~F4	non-function, for backup use only
AUX 1	non-function, for backup use only
AUX 2	non-function, for backup use only
ZOOM	press '+' or '-' to control zoom function of lens
FOCUS	press '+' or '-' to adjust focus of lens
IRIS	non-function,
AUTO	to control auto-rotate of pan/tilt

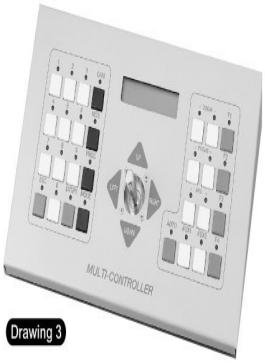

Drawing 3

Ⅳ. LRVS-24D Sub Station installation

(Drawing 4)

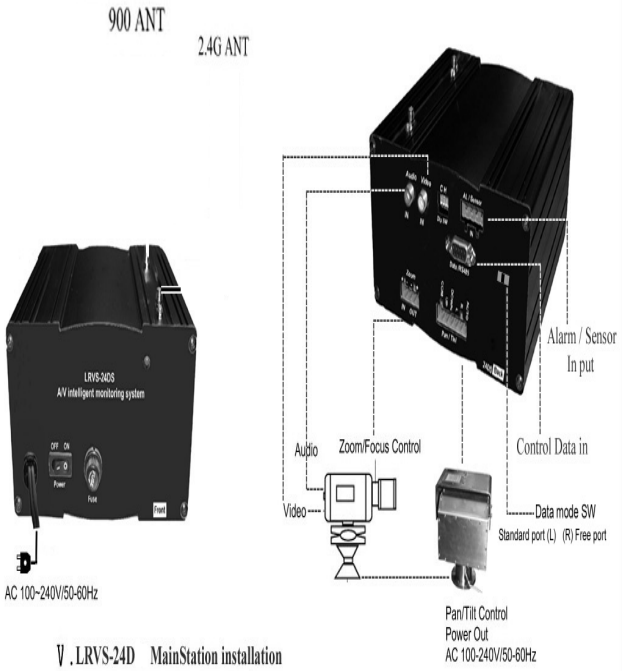

Drawing 4

Ⅴ. LRVS-24D MainStation installation

(Drawing 5)

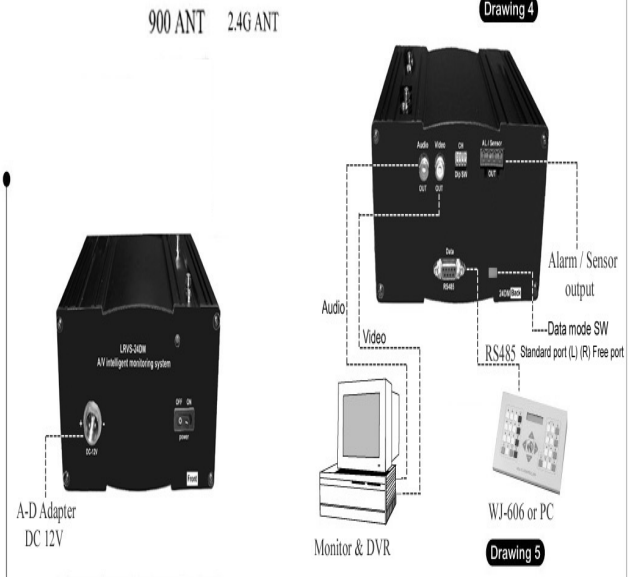

Drawing 5

Attentions for installation

1. When installing the transmitting unit outdoor, please make certain the connecter side is facing down.
2. Make certain all bolts and screws are properly tightened.
3. Both units should be mounted at area of good air circulation.

■ System Operation Guide

LRVS-24Dis a PLL (Phase Lock Loop) design 16 channels system, that is, sixteen cameras can be setup in one area for security operation. System layout like drawing 6, each 24DS sub and 24DM main pair transmit video/audio signal back to control center, video output of 24DM is then connected to DVR for storage or monitor for viewing real picture and audio output of 24DM can be connected to audio amplifier directly. All sixteen RS-485 ports of 24DM can be connected in parallel together through splitters box WJ24-8 and output of WJ-606 connect with RS-485 port of control box via RS-485 cable. Following are Setup and operating procedure of LRVS-24D :

1) Connect video transmit unit (24DS) 、 pan/tilt and camera like DRAWING 4.
2) Connect video receiving unit(24DM) 、 splitters box (WJ24-8) and control box (WJ-606) via RS-485 cable like DRAWING 5.
3) Chose working channel by select DIP- switch of 24DS (parts10 of Drawing 1) and 24DM (parts 7 of Drawing 2).
4) Turn on power of each unit.
5) Now system can be control from control box (WVTS-control).
6) Chose 24DM/24DS pair (1 ~ 16, depend on position of DIP-switch) from left side keypad of control box.(for example: if you want view picture of pair 1,then just press '1' and then 'ENTER' key)
7) If enter wrong number then just press 'ESC' key before press 'ENTER' key and re-enter number again.
8) Rotate pan/tilt of camera by control joystick of control box.
9) If want pan/tilt rotate automatically just press 'AUTO' key.
10) Control Zoom/ Focus of camera by press key of 'ZOOM+'、'ZOOM-'、'FOCUS+' and 'FOCUS-' from right side keypad of control box.

B. System Layout

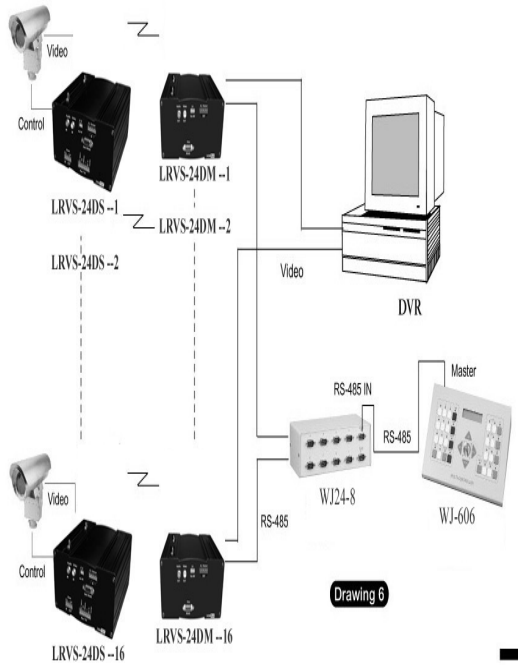

Drawing 6

■ Antenna installation and transmitting distance

Ⅰ. System Features:

The system operates in UHF frequency band, line of sight video image transmitting, for better transmitting quality, location and antenna will be critical for this application.

Ⅱ. Antenna in stallion.

1. The higher of the antenna and with less interference between the antennas, the better transmitting quality it gets. Formula as follow:

$$e = K \cdot \frac{H_T \cdot H_R}{\lambda D^2}$$

E : Signal strange
λ : Wave length
D : Distance between antennas
Ht : Transmitting antenna height
Hr : Receiving antenna height
K : various

2. Antenna installation

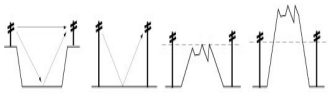

Best Good Poor Worst

3. Mobile vehicle transmitting antenna location

Best Good Poor

Ⅲ. Transmitting range and antenna selection

1. Use indoor type antenna for distance up to 1Km.
2. Use umbrella type for distance up to 3Km.
3. Use single row direction antenna for distance up to 5Km.
4. Use Double row direction antenna for distance up to 5 Km with interference.

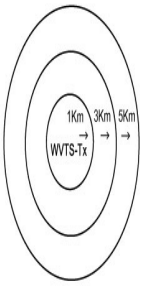

Ⅳ. Notice for installation

1. Antenna location should be at the highest site available with less interference.
2. Min. high for antenna location is 3 meters off the ground.
3. Antenna installation should be away from power line or near building's wall.
4. If Install on top of roof antenna high should not be higher then the lighting rod.
5. Cable connection should be warp with electrician tape to avoid water enter the cable.
6. When install cable through wall, a water plug should install in to the wall to avoid water enter the house or unit.
7. Do not install the system in rainstorm.
8. Do not install unknown type or unknown spec. cable or antenna to the system.
9. Do not bend cable more then 90 degreed, if turn has to be made, loop the cable to the direction.

■ Specifications

LRVS-24D Transmitter			LRVS-24D Receiver		
System	Power Input:	100VAC~240VAC	System	Power Input:	100VAC~240VAC
	Power Consumption:	30 Watts		Power Consumption:	15 Watts
				Control Port:	RS485, 9.6 bps
Video	Video Image Level:	1V p.p	Video	Video Image Level:	1V p.p
	I/P Impedance:	75 Ohms		O/P Impedance:	75 Ohms
	I/P Connector:	RCA Jack		O/P Connector:	RCA Jack
	S/N Ratio:	45 dbmin		S/N Ratio:	45 dbmin
	Video Signal:	NTSC/PAL		Video Signal:	NTSC/PAL
Audio	I/P Level:	1V p.p	Audio	O/P Level:	1V p.p
	I/P Impedance:	600 Ohms		O/P Impedance:	600 Ohms
	I/P Frequency Range:	300Hz~15KHz		O/P Distortion:	5%
	I/P Distortion:	5%		S/N Signal:	40 dbmin
	S/N Signal:	40 dB(min)		S/N Connector:	RCA Jack
	S/N Connector:	RCA Jack			
Radio Frequency	Video & Voice Modulation: FM		Radio Frequency	Video Sensitivity:	-85 dbm
	Operation Frequency: 2.4 ~ 2.4835GHz			Data Sensitivity:	-90 dbm
	Video Modulation Bandwidth: 10MHz				

FEDERAL COMMUNICATIONS COMMISSION

This device complies with Part 15 of the FCC Rules. Operation is subject to the following two conditions:(1) this device may not cause harmful interference, and (2) this device must accept any interference received, including interference that may cause undesired operation.
Changes or modifications not expressly approved by the party responsible for compliance could void the user‘s authority to operate the equipment.

NOTE

This equipment has been tested and found to comply with the limits for a Class B digital device, pursuant to Part 15 of the FCC Rules. These limits are designed to provide reasonable protection against harmful interference in a residential installation. This equipment generates, uses and can radiated radio frequency energy and, if not installed and used in accordance with the instructions, may cause harmful interference to radio communications. However, there is no guarantee that interference will not occur in a particular installation If this equipment does cause harmful interference to radio or television reception, which can be determined by turning the equipment off and on, the user is encouraged to try to correct the interference by one or more of the following measures:

-Reorient or relocate the receiving antenna.
-Increase the separation between the equipment and receiver.
-Connect the equipment into an outlet on a circuit different from that to which the receiver is connected.
-Consult the dealer or an experienced radio/TV technician for help.

Note:
This device and its antenna(s) used for this transmitter must not be co-located or operating in conjunction with any other antenna or transmitter.