NUR3-0W1

HW IMPLEMENTATION GUIDE

Nordic ID Group | Joensuunkatu 7 | FI-24100 Salo |Finland
Office +358 2 727 7700 | Fax + 358 2 727 7720 | info@nordicid.com
www.nordicid.com | www.rfidarena.com

CONTENTS

1. GENERAL DESCRIPTION 4
1.1. KEY FEATURES 4
1.2. BLOCK DIAGRAM 4
1.3. TYPICAL APPLICATION SCHEMATICS 5
2. ELECTRICAL CHARACTERISTICS 5
2.1. ABSOLUTE MAXIMUM RATINGS 5
2.2. DC CHARACTERISTICS 5
2.3. RF CHARACTERISTICS 6
2.4. PERFORMANCE CHARACTERISTICS 6
3. PAD ASSIGNMENTS 6
3.1. PAD DESIGNATION 7
3.2. SIGNAL-TO-PAD MAPPING 7
3.3. SIGNAL DESCRIPTIONS 8
4. OEM DESIGN CONSIDERATIONS 10
4.1. RF-OUTPUT AND ANTENNA REQUIREMENTS 10
4.1.1. LAYOUT RECOMMENDATIONS 10
4.1.2. TRANSMISSION LINE 11
4.1.3. ENSURING CPW TRACE QUALITY 12
4.2. POWER SUPPLY 13
4.3. USB DEVICE PORT 13
4.4. GPIOS 13
5. RF-PARAMETERS 14
5.1. TX-LEVEL 14
5.2. RF-PROFILE 14
5.3. REGION 14
6. RFID INVENTORY PARAMETERS 15
6.1. Q-VALUE 15
6.2. SESSION 16
6.3. ROUNDS 16
6.4. SELECTING RIGHT PARAMETERS 17
6.5. RSSI-FILTERS 17
6.6. DYNAMIC POWER SAVE MODE 18
7. TAG SIGNAL AND SYSTEM QUALITY INDICATORS 19
7.1. TAG REPLAY QUALITY INDICATORS 19
7.1.1. RECEIVED SIGNAL STRENGTH INDICATOR (RSSI) 19
7.1.2. TAG REPLAY PHASE ROTATION VALUE 19
7.1.3. TAG REPLAY DOPPLER SHIFT VALUE 19
7.2. REFLECTED POWER VALUE 19

8. DIMENSIONS 20
8.1. MECHANICAL DIMENSION 20
8.2. LAND PATTERN 21
9. SMT ASSEMBLY PROCESS AND THERMAL PROCESSING 22
9.1. STORAGE CONDITIONS 22
9.2. SOLDERING PROCESS 23
10.REGULATORY INFORMATION 25
10.1. EUROPEAN UNION AND EFTA COUNTRIES 25
10.2. FCC 29
10.3. ISED 32
10.4. ISED 33
11.ABOUT NORDIC ID 36
12.VERSION HISTORY 37

1. GENERAL DESCRIPTION

NUR3-0W1 is an extremely small UHF RFID module with a footprint of 15 x 15mm. It is compatible with ISO18000-63 (EPC C1G2) standard providing all basic functionalities like inventory, read, write, access, lock, kill. Module fulfils ETSI, FCC and ISED radio regulations. It is also compatible with DRM (dense reader mode) requirements. Maximum output power is 20dBm and it can be adjusted via SW API with 1 dB steps. Module is aimed to be embedded into small sized UHF RFID end-products. It is also perfect choice for battery operated devices as module consumes very small amount of power compared to other UHF RFID reader modules available.

1.1. KEY FEATURES

- SMT compatible module with extremely small footprint
- ISO 18000-63 (EPC C1G2) full protocol support + custom commands
- Low power consumption with high noise rejection due to on-board voltage regulators
- DRM compatible
- Freely adjustable RF and inventory parameters
- Approved by ETSI, FCC and ISED telecommunication organizations
- UART and USB 2.0 communication
- 8 programmable GPIO with event trigger

1.2. BLOCK DIAGRAM

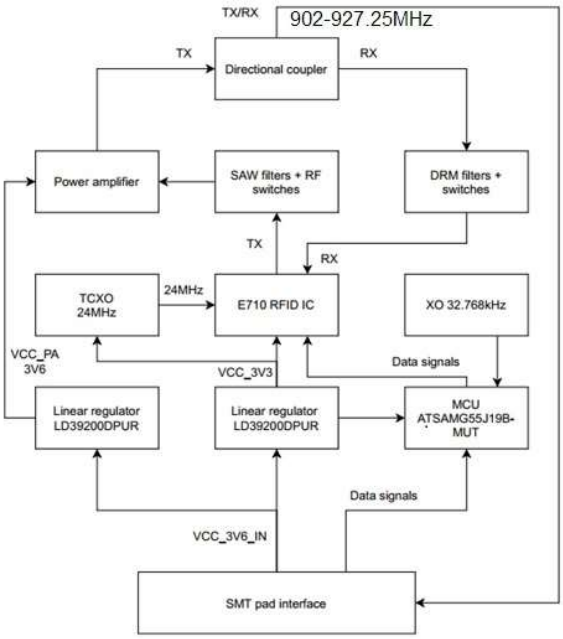

Figure 1. Block diagram of the NUR3-0W1 module.

1.3. TYPICAL APPLICATION SCHEMATICS

Please refer to the reference design of the NUR3-0W1. It demonstrates a simple schematic around a NUR3-0W1 module to form a 4-port fixed reader with dedicated USB-C port for power supply and dedicated USB-C port for communications. Also, UART-port and GPIO's of the NUR3-0W1 module are available for easy testing and development.

2. ELECTRICAL CHARACTERISTICS

Section provides information about the DC, RF and performance characteristics of the NUR3-0W1 module.

2.1. ABSOLUTE MAXIMUM RATINGS

Violating these values may cause damage to the module. Also, correct operation is not guaranteed if operating outside these values. NUR3-0W1 is ESD sensitive component so it must be handled with care.

Table 1. DC characteristics (VCC_3V6 = 3.6V @ +25°C).

Absolute maximum ratings	Value
Operation ambient temperature	-20°C to +55°C
Storage temperature (package unopened)	-30°C to +85°C
Supply and enable voltage	+7.0V
Maximum GPIO pin voltage	+4.0V
Other pins	+4.0V

2.2. DC CHARACTERISTICS

Table 2. DC characteristics (VCC_3V6 = 3.6V @ +25°C).

Symbol	Parameter	Min	Typical	Max	Units
V_{ext}	Supply voltage range	3.5	3.6	5.5	V
I_{ext}	Maximum supply current	280	310	350	mA
I_{source}	Maximum GPIO source current	-	-	4	mA
I_{sink}	Maximum GPIO sink current	-	-	4	mA
V_{low}	GPIO input low-level voltage	-	-	0.8	V
V_{high}	GPIO input high-level voltage	2.0	-	-	V

V_{en}	Module enable voltage	1.2	-	Supply	V

2.3. RF CHARACTERISTICS

Table 3. RF characteristics (VCC_3V6 = 3.6V @ +25°C).

Symbol	Parameter	Min	Typical	Max	Units
S_{ens}	Receiver sensitivity (RF port of the module)	-	-	-87dBm	dBm
P_{out}	Maximum RF output power	-9	19	20	dBm
P_{adj}	Power adjustment step	-	1	-	dB
S_{11}	Reflection attenuation for antenna	10	-	-	dB
$D_{R\rightarrow T}$	Reader-to-tag data rate	TBD	TBD	TBD	kbps
$D_{T\rightarrow R}$	Tag-to-reader data rate	TBD	TBD	TBD	kbps

2.4. PERFORMANCE CHARACTERISTICS

The performance of the module is highly dependent on the test environment, reader antenna and tag performance. Interferences from other radio sources operating in the same frequency may decrease the performance. Also, the tag antenna and the tag IC may have significant effect on the values presented below. Selected RF and inventory parameters do have a big influence to reading performance as well.

Table 4. Performance characteristics (VCC_3V6 = 3.6V @ +25°C).

Symbol	Parameter	Min	Typical	Max	Units
R_{dist}	Reading distance with 4dBi antenna (Belt R6)		2		m
R_{rate}	Read rate (RF profile dependent)			800+	tags/s
T_{amb}	Operation ambient temperature	-20	-	+55	°C
H_{rel}	Relative humidity	10	-	95	%

3. PAD ASSIGNMENTS

This section provides information about the different signals available from NUR3-0W1 module and how they are mapped to physical pads of the component.

3.1. PAD DESIGNATION

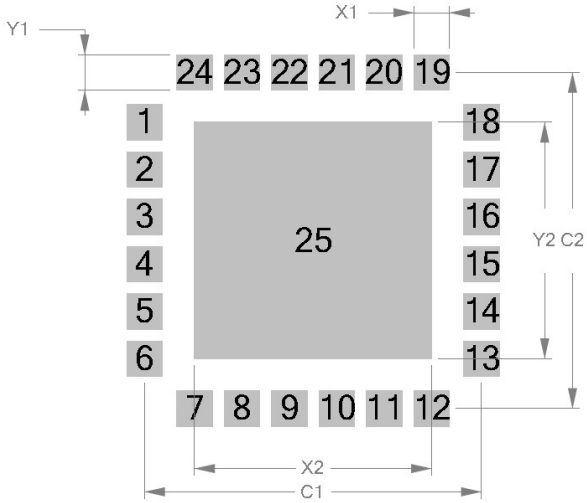

Figure 3. Pad numbering (top thru view).

3.2. SIGNAL-TO-PAD MAPPING

Below table provides pin-to-signal mapping information.

Table 5. Signal descriptions.

Pin number	Signal name	Pin type
1	GPIO_6	Bidirectional
2	GPIO_5	Bidirectional
3	GPIO_4	Bidirectional
4	GPIO_3	Bidirectional
5	GPIO_2	Bidirectional
6	GPIO_1	Bidirectional
7	USB_5V	Input (USB detection)
8	USB+	Bidirectional (USB data plus)
9	USB-	Bidirectional (USB data minus)
10	UART_TX	Output

11	UART_RX	Input.
12	VCC_3V6	Supply input
13	ENABLE	Input
14	VCC_3V3_OUT	Supply output
15	SWDIO	Bidirectional
16	SWCLK	Input
17	GPIO_7	Bidirectional
18	GPIO_8	Bidirectional
19	RFU	NC
20	RFU	NC
21	RFU	RF Input (Monostatic configuration)
22	GND	Supply
23	RF_OUT	Bidirectional
24	GND	Supply
25	Thermal pad	Supply

3.3. SIGNAL DESCRIPTIONS

Below table provides descriptions for NUR3-0W1 module signals.

Table 6. Signal descriptions.

Signal name	Pin number(s)	Description
USB+	8	This pin is used as USB data plus device port. It is advised to use external ESD protection component if connected to user accessible USB connector.
USB-	9	This pin is used as USB data minus device port. It is advised to use external ESD protection component if connected to user accessible USB connector.
USB_5V	7	This pin is only used for USB connection detection. It is advised to use external ESD protection component if connected to user accessible USB connector. Current is not drawn from this input pin.
UART_TX	10	This pin is used for module UART output signal. Logic level is 3.3V. If UART is used for communication the pin should be connected to the Host MCU UART RX port.

UART_RX	11	This pin is used for module UART input signal. Logic level is 3.3V. If UART is used for communication the pin should be connected to the Host MCU UART TX port.
VCC_3V6	12	This pin is used for power supply input for NUR3-0W1 module. It is recommended to use 100µF (low ESR) 100nF and 100pF capacitor near the VCC_3V6_IN input pin to maintain stable operating voltage for the reader module.
ENABLE	13	Driving this pin to high will enable the NUR3-0W1 module. It is internally connected to onboard voltage regulator's enable input. The trigger level is 1.2V and the reader module will wake up in 1.5s. If the external power switch is used to toggle ON and OFF, this pin can be connected directly to VCC_3V6_IN.
VCC_3V3_OUT	14	This pin is connected to internal power regulator output. The pin is used for production testing and it should not be used.
SWDIO	15	For production purposes. Do not use.
SWCLK	16	For production purposes. Do not use.
RFU	19,20,21	These pins are reserved for future use. Do not connect these pins.
GPIO_x	1,2,3,4,5,6,17,18	These pins are used as general-purpose IOs. They can be configured via SW API as input or output ports. IO voltage level is 3.3V. GPIOs have source current capability of 4mA and sink current capability of 4mA.
RF_OUT	23	50Ω impedance RF output / input pin. Trace to/from this pin should be also matched to 50 Ω. See more details from the design considerations section.
GND	22,14,	These pins are used for grounding and to improve the thermal performance. They should be connected to Host board GND net.
Thermal	25	These pins are used for grounding and to improve the thermal performance. They should be connected to Host board GND net.

4. OEM DESIGN CONSIDERATIONS

This section covers OEM design considerations. Design guidance's presented below needs to be followed to guarantee a proper operation of the Nordic ID NUR3-0W1 UHF RFID module.

4.1. RF-OUTPUT AND ANTENNA REQUIREMENTS

The RF output impedance level is 50Ω so the trace leaving from the RF pad shall be kept in that same impedance level to avoid reflections and mismatch of the RF signal. From the RFID reader module's point of view, it is important that the used antenna has a low VSWR value. The VSWR shall be better than 1.5:1 to avoid decrease in the sensitivity performance of the receiver.

Poor VSWR of the antenna leads to situation where significant portion of the transmitted signal will reflect to the module from the antenna. NUR3-0W1 module has automatic leakage cancellation system that decreases the effect of the reflected signal. The automatic leakage cancellation is automatically on when module is operating in normal mode.

4.1.1. LAYOUT RECOMMENDATIONS

Because Nordic ID NUR3-0W1 module is a wireless device, the RF section must be the top priority in terms of layout. It is very important that layout is made by following the proper RF design guidelines to get the optimal performance from the device. Poor layout can decrease the output power, sensitivity, and cause mask violations.

Component places; R3, C10 and C1 are for additional output matching. Additional matching is not used in the reference design. Thus, values are as follows: R3 =0R, C10 & C1= No assembly.

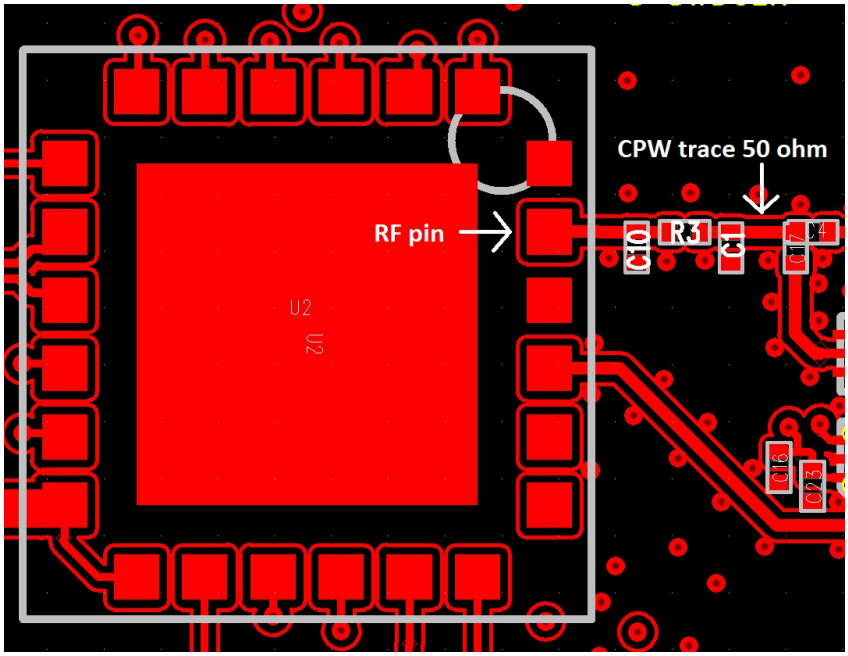

Picture 3. *RF output layout of the reference design.*

4.1.2. TRANSMISSION LINE

The RF signal from the module is routed to antenna connector using a grounded CPW structure. This is to achieve the maximum isolation and RF shielding to RF lines. Also, grounding vias should be added along the line to give additional shielding.

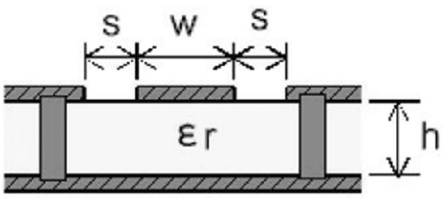

Figure 4. Grounded CPW with via stitching.

Table 7. Recommended PCB values for 4-layer board (L2 is the GND plane for transmission line)

Profile	Value	Units
W	0.35	mm
S	0.2	mm
H	0.18	mm
Er	4	

General recommendations:

1. RF traces must have 50 Ohm impedance because module is only rated to operate in 50 Ohm systems.
2. RF trace bends must be gradual and not have any sharp corners.
3. Grounded CPW structure must have GND via stitching.
4. Only connect antennas which are approved.

NUR3-0W1 module EVB CPW trace length is presented below. At the end of the CPW trace, there is a MMCX RF-connector in the NUR3-0W1 module's EVB. MMCX-to-SMA coax cable was used to connect the authorized antenna to the EVB during the modular approval measurements.

Note that RF-OUT 1 was used in the NUR3-0W1 certification. Other ports were disabled and those were used only for internal testing purposes.

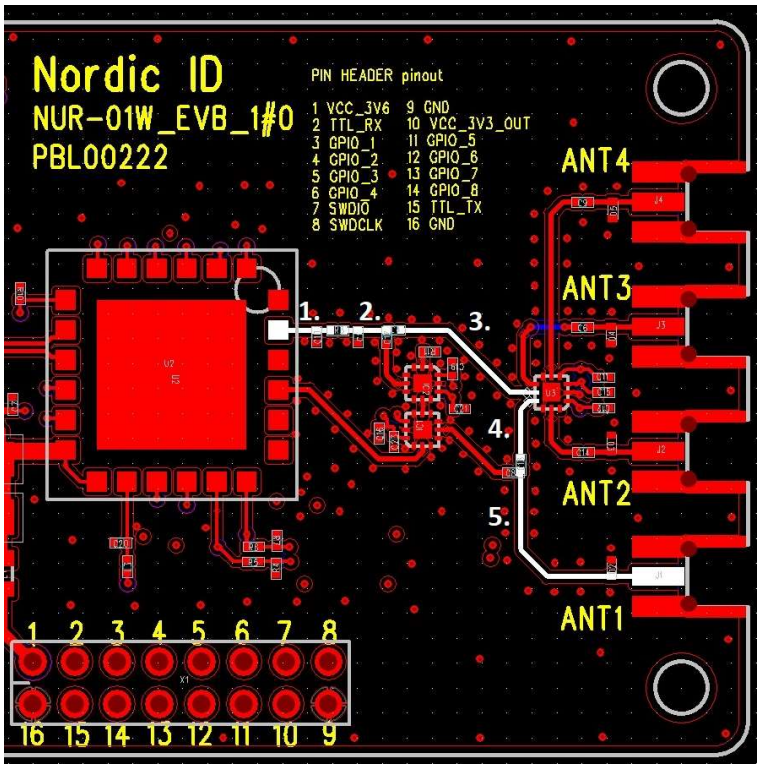

Picture 5. NUR3-0W1 module EVB RF path used in certifications.

Trace segment nr.	Segment length (mm)	Impedance (ohm)
1.	3.2	50
2.	2.6	50
3.	9.7	50
4.	4	50
5.	13.7	50

Table 8. Trace lengths indicated in picture 5.

4.1.3. ENSURING CPW TRACE QUALITY

There are two ways the CPW quality can be checked. Those are presented below:

1. Use the reflected power measurement -function available via API and Nordic ID test tools. Result should be equal or less than -5. This function measures how much power is reflected back to the module due to mismatch of the load seen from the NUR3-0W1 modules RF output. Note that line needs to be ended with 50ohm load while doing the measurement.

2. Before NUR3-0W1 module is assembled into the host PCB, one could measure the refection coefficient of the trace using VNA. The attenuation should be equal of better then -10dB. Note that line needs to be ended with 50ohm load while doing the measurement.

4.2. POWER SUPPLY

The NUR3-0W1 has internal linear power regulators for getting better power supply noise rejection. However, it is still important to supply low noise and stable power to the module. The voltage ripple should be kept under 200mVpp and it is recommended to add a minimum of 100µF low ESR, 100nF and 100pF capacitors next to the VCC_3V6_IN pin.

VCC_3V3_OUT is internal regulator output and it is used for production testing purposes. This pin should not be used to power external circuits.

4.3. USB DEVICE PORT

USB+, USB- and USB_5V pins are used to provide 2.0 compliant USB device port. It is advised to use external ESD protection component if connected to user accessible USB connector. Please the section 1.3 for typical USB connection schematics.

4.4. GPIOS

All GPIOs can be configured via Nur API as inputs or outputs. IO voltage level is 3.3V and maximum source and sink current is 4mA. When configured as input the state of the GPIO pad in question is accessible via Nur API. Also, event is generated from the state changes. When GPIO is configured as an output the Nur API can drive the GPIO pin to high or low voltages.

There are also pre-defined functionalities implemented for GPIOs. One of these is the possibility to control external RF switch. Please refer to Nur API for more information GPIOs and pre-defined functionalities.

Proper ESD and EMC measures needs to be considered if GPIO ports of the Nordic ID NUR3-0W1 UHF RFID module are accessible for user.

5. RF-PARAMETERS

By adjusting the RF parameters, it is possible to optimize the modules RF performance for different environments and use cases.

5.1. TX-LEVEL

The maximum TX output power level is 20dBm (100mW). The power can be adjusted by 1dB steps. In total, there are 30 steps meaning the minimum output power value is -10dBm. If your implementation uses more than 1 antenna and antenna switch is controlled by NUR3-0W1 antenna control -functions, you can set individual per antenna TX power levels. Refer to API documentation for more information.

5.2. RF-PROFILE

There are 5 different RF profiles which can be selected. Robust, Nominal, Fast, High speed and High speed_2. Robust offers the best sensitivity but read rate also is the slowest (Robust naming convention is kept for backwards compatibility reasons even though in gen3 modules it is sensitivity optimized profile). Nominal is offers good balance between a tolerance for interferences, read speed and sensitivity. Nominal is also meant for DRM use cases. Fast bring more read speed by compromising a bit of sensitivity. High speed and High speed_2 profiles as purely read speed optimized. High speed_2 being the fastest.

Table 8. Available RF profiles.

Profile	R → T and T→ R parameters used	Read rate up to (tags/second)
Robust	TBD	50+
Nominal	TBD	200+
Fast	TBD	500+
High speed	TBD	700+
High speed 2	TBD	800+

5.3. REGION

Nordic ID NUR3-0W1 has pre-defined region settings defining frequency and channel sets for operating under different radio regulations. Globally the regulations vary depending on the country. Refer to Nur API documentation for list of pre-defined countries. When module ships from the production it is locked to pre-selected (based in the SKU) region setting and cannot be changed by the user. Contact Nordic ID support for more information.

5.3.1. ANTENNA CONTROL

There are pre-defined GPIO functionalities called ANTENNA CONTROL1 and ANTENNA CONTROL2 which you can set to a GPIO port of the Nordic ID NUR3-0W5 UHF RFID module. When this

functionality is used module will take the control of the external RF switch using one or two control lines. From the table 8 you can see the thru table.

Case (selected antenna)	ANTENNA CONTROL 1	ANTENNA CONTROL 2
0 (antenna 1)	Low	Low
1 (antenna 2)	High	Low
2 (antenna 3)	Low	High
3 (antenna 4)	High	High

Table 9. *Antenna control truth table.*

When this functionality is used it is possible to control which antenna is used or are antennas automatically toggled by the module. In multiantenna scenarios tag replay metadata includes information which antenna port was used to detect the tag.

6. RFID INVENTORY PARAMETERS

By selecting the proper RFID inventory parameters, you can optimize the modules reading performance for different tag populations and use cases.

6.1. Q-VALUE

The Q-value defines the amount of open response slots that tags can use per one inventory round. Number of slots can be calculated by formula 2^Q. It is advised to use twice as much slots compared to amount of tags that you have in your readers reading field simultaneously. Selectable values are 0 – 15 and value 0 means automatic Q-value adjustment. When q value of 0 is used, reader will automatically increase the Q-value when lots of collisions are noticed and decreased the value when there are only few collisions. By default, the Q-value is set to 0.

Table 9. Relation between the Q value and the number of response slots for round.

Q-value	Response slots	Q-value	Response slots
0	Automatic	8	256
1	2	9	512
2	4	10	1024
3	8	11	2048
4	16	12	4096
5	32	13	8192
6	64	14	16384

7	128	15	32768

6.2. SESSION

There are four session options which you can use when initializing inventory round. Every session has two target states A and B. By default, Gen2 tags are at state A if tag has not been read recently. When tag is read it flips to state B and doesn't reply to readers query made using target state A. The table below describes the persistence of tag's state machine when using different session values. For example, when using session 0 the tag will come back to state A immediately when tag power is lost. Usually tag loses the power when reader stops the inventory round or chances the channel. Persistence when tag power is ON is not defined by the ISO18000-6C when using session settings S0, S2 and S3. With session 1 the tag will keep it state over 500ms but less than 5s. With session values 2 and 3 tags will keep it states over 2s when tag power is lost. Time can vary depending what tag IC is used.

Table 10. Persistence characteristics of gen2 tags.

Session flag	Persistence: Tag power ON	Persistence: Tag power OFF
S0	Indefinite	None
S1	500ms < t < 5s	500ms < t < 5s
S2	Indefinite	t > 2s
S3	Indefinite	t > 2s

6.2.1. TRANSMISSION TIME CONTROL

The NUR3-0W1 module has fixed maximum channel times defined by the radio regulations. While operating under ETSI following regions the maximum channel time is 3950ms and under FCC it is 395ms. Note that Q- and Rounds-values do not change these maximum limits. Channel usage is also randomized.

6.3. ROUNDS

The rounds setting defines how many query rounds is done inside one inventory round. After every inventory round the reader will send data to the Host. Selectable values are 0 – 10. Zero meaning automatic rounds adjustment. The automatic adjustment decides after every query round whether another round is necessary based on the number of data collisions. By default, rounds setting is set to 0. This setting can help the reader to find all the tags that are in the readers reading field when using session 0. Because tags that are found in query round 1 doesn't replay in the following query rounds. When using session 1/2/3 this does not make any significant difference because tags that are read are quiet anyway.

Table 11. Relation between inventory round and query round.

Inventory round				
Query round 1	Query round 2	Query round 3	…	Query round 10

6.4. SELECTING RIGHT PARAMETERS

General guidance is that Q-value should be adjusted so that there are 1.5 – 2 times more response slots compared to the amount of tags simultaneously on the readers field-of-view. If reader will face many different tag populations than automatic Q-adjustment (Q=0) setting will be a good choice.

Besides Q-value one important parameter is session. In general, it could be stated that if the size of tag population is measured in thousands rather than in hundreds it is wise to use sessions 2 or 3. Because then every tag will be read only once making the mass inventory efficiency much better. Rounds 1 setting is also advised to be used with session 1 or 2 or 3.

6.5. RSSI-FILTERS

NUR3-0W1 module has internal RSSI filters which can be used to limit the read area. By applying the filters, you can set the limits which tag replay must met to be registered. MIN RSSI –value means that tag replay signal needs to be equal or stronger then the defined value. Otherwise tag is not read. MAX RSSI value in other hand means that signal strength must be lower than the filter value. There are separate RSSI filter values for inventory, read and write operations. These can be set individually.

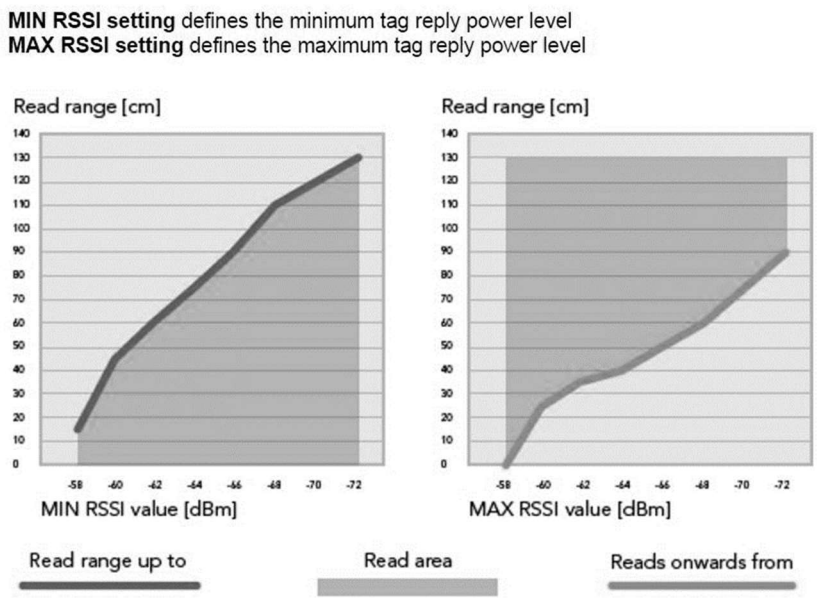

Figure 5. Read range limited by the RSSI filter (100mW TX power level and 0dBi antenna gain used).

6.6. DYNAMIC POWER SAVE MODE

NUR3-0W1 module has power save modes which can be enabled via SW API. By default, the power save is ON with depth of 100ms. Other depths are 500ms and 1000ms. The power save mode works in a way that when module reads continuously (applies only when using inventory stream -command) it goes to sleep if there are no tags in the field. The sleep time is defined by the depth value. After the sleep period is elapsed module starts to read again and so on. If there are one or more tags in the field the module will not go into sleep

7. TAG SIGNAL AND SYSTEM QUALITY INDICATORS

Tag signal quality indicators can be used for multiple use cases like assessment of the distance between the reader antenna and the tag. When parameters are used in a statistical way you could use these to asses is tag stationary or not. Also, you could prevent certain operations, like tag writing, if signal strength is not high enough.

Reflected power value can be used to verify that matching of the system and antenna is in proper level.

7.1. TAG REPLAY QUALITY INDICATORS

Tag replay quality indicator values are reported to the host system together with read data of the tag. Note that to obtain also the tag phase rotation value, you need to enable this functionality first. Please refer to Nur API documentation for more detailed information.

7.1.1. RECEIVED SIGNAL STRENGTH INDICATOR (RSSI)

When reading a tag NUR3-0W1 module also returns received signal strength indication values. Two values are returned per one tag. One is the absolute power level (dBm) and second is the scaled RSSI value of the tags backscatter signal. Scaled RSSI value returned is between 0 – 100. 0 being the minimum signal level the module can receive and 100 as a maximum.

7.1.2. TAG REPLAY PHASE ROTATION VALUE

Nordic ID NUR3-0W1 UHF RFID module can provide the tag phase rotation value of the tags replay signal (in relation the to the transmitted signal). Dynamic range for this value Is from 0 to 360 degrees.

7.1.3. TAG REPLAY DOPPLER SHIFT VALUE

Nordic ID NUR3-0W1 UHF RFID module can provide a tag phase rotation difference value. This is obtained by measuring the phase rotation angle value at the beginning of the reception of the EPC and at the end of the same reception. Difference between these values is then reported to the Host. Obtained value can then be used to calculate the doppler shift.

7.2. REFLECTED POWER VALUE

This measurement can be used to check what is the matching of the antenna(s) and feed line(s). When this function is triggered NUR3-0W1 module puts carrier wave on at 20dBm output power. Absolute power level which is coming back to the receiver port of the module is then measured.

Reflection attenuation = 20 + (- Reported reflected power level by the module) - 12

This feature can also be used for antenna detection. If there is no antenna connected to the port, the reflected power value will be close to the level of transmitted signal.

8. DIMENSIONS

Mechanical dimension and land pattern of the NUR3-0W1 module.

8.1. MECHANICAL DIMENSION

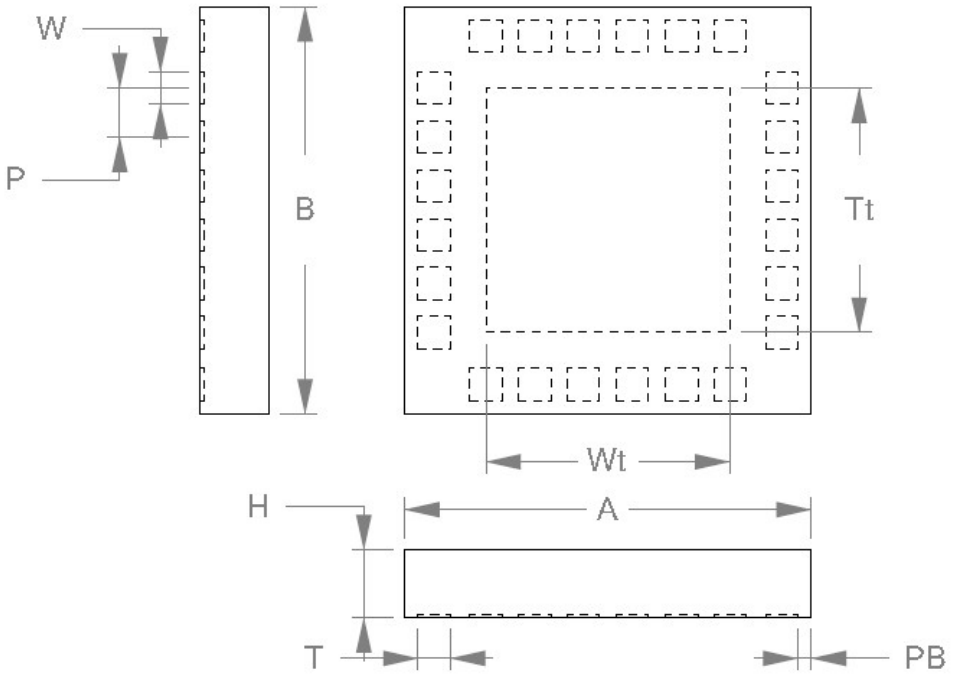


```
Pitch.....................1.80
Pins A....................6
Pins B....................6
Pin Count.................24
Pull Back.................0.50
Tmin......................1.20
Tmax......................1.20
Wmin......................1.20
Wmax......................1.20
Tab Ttmax.................9.00
Tab Wtmax.................9.00
Tab Ftmax.................0.00
Amin......................15.00
Amax......................15.00
Bmin......................15.00
Bmax......................15.00
Hmax......................2.50
```

Unit mm

8.2. LAND PATTERN

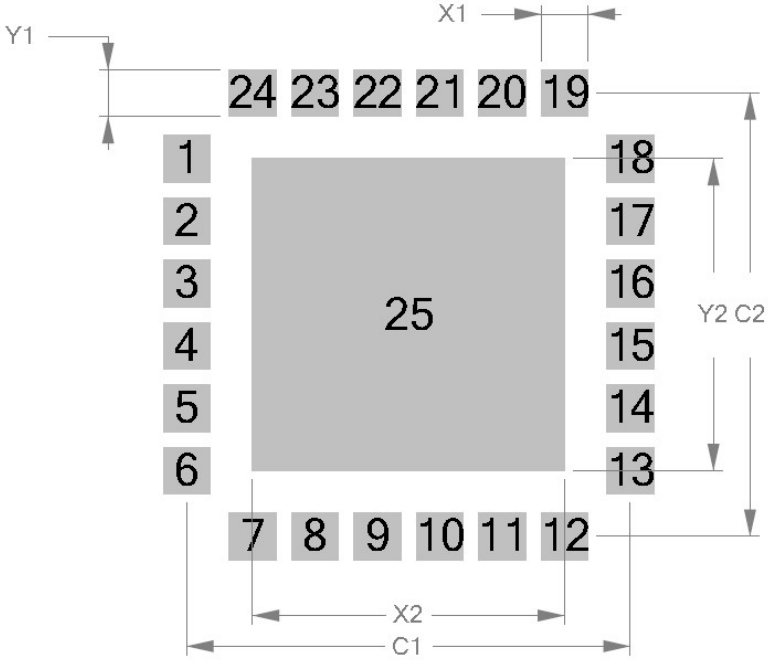


```
C1.........................12.80
Y1.........................1.35
X1.........................1.35
C2.........................12.80
Y2.........................9.00
X2.........................9.00
```

Unit mm

9. SMT ASSEMBLY PROCESS AND THERMAL PROCESSING

NUR3-0W1 module contains single sided assembly of SMT components reflow-soldered on multilayer HDI (high density interconnections) glass-fiber re-enforced epoxy printed board. The bottom side terminations are ENIG (NiP/Au) plated. Soldering alloy used for attaching module components is eutectic SnAgCu. Module internal components soldering has been optimized for minimal thermal stress.

NUR3-0W1 modules shall be delivered in a special tray packing to protect modules against mechanical, ESD and moisture related stresses. Due to high density interconnections technology, module total water content must be below 0.1%-w prior to any thermal processing above water boiling point.

The board assembly process of NUR module on motherboard will introduce re-flow of module components. Thus, to avoid degradation of solder joint interfaces, the module must be stored and soldered according to the guidelines given below.

9.1. STORAGE CONDITIONS

Long-term storage conditions

Temperature	+15...+27°C (optimal)
Temperature gradient	max. 2°C/hour
Relative humidity	< 15% within specified temperature range

Opened and broken packages must be re-sealed. If open time (floor life out of pack) has been exceeded, or moisture content detected, modules must be baked prior to re-sealing vacuum pack.

Short-term storage conditions (typically same as production environment)

Temperature	+20...+27°C
Temperature gradient	max. 2°C/hour
Temperature gradient	< 15% within specified temperature range

Modules may be stored in a dry cabinet without protective packing according to IPC/JEDEC J-STD-033B.1, table 7-1.

MSL level and open time

MSL level	5
Open time (floor life out of the bag)	48h

9.2. SOLDERING PROCESS

Boundary conditions

Acceptable soldering methods	Convection reflow in air or nitrogen atmosphere Condensation reflow soldering (vapor phase)
Recommended stencil thickness	125um ±10um
Pad design on motherboard	See recommended pad pattern
Stencil openings	TBD
Recommended solder alloy	SnAg3.8±0.2Cu0.7±0.2 Note! If using under-eutectic solder alloys, such as SAC305, it may be necessary to increase reflow peak temperature by 5-10°C, due to higher mp. and lower fluidity of non-eutectic SnAgCu alloys. This will increase thermal stress to module and motherboard greatly.
Convection reflow oven heater configuration	Double sided heating required in reflow, recommended in preheating zones.
Maximum absorbed moisture content prior to thermal processing	0.1%-w (Test method IPC-TM-650, 2.6.28) Moisture content and/or moisture absorption rate, Printed Board
Recommended moisture reduction condition	+60°C/12h vacuum pack removed during drying, re-seal after drying, unless modules will be used within allowed open time after drying
Moisture and solvent contamination	No moisture or solvent contamination allowed in solder paste or on solderable surfaces

Recommended reflow conditions

Preheating phase	-max. duration 180s -end temperature 190-200°C -delta T on assembly max. 10°C at end of preheating
Soldering phase	-total duration 190s -max. time above 217°C (mp.) 30s -Tpeak max. 235°C, measured at module bottom -Tpeak max. 225°C, measured at motherboard surface, under module
Cooling	Two-stage, double sided cooling recommended 1st stage: 2-5°C/s cooling until melting point

	2nd stage: 1-3°C/s after melting point

10. REGULATORY INFORMATION

When OEM prefers to leverage Nordic ID's grants and certifications of the NUR3-0W1 UHF RFID module, the host device documentation shall include regulatory compliance information on the NUR3-0W1 module. Corresponding to the applicable regulatory agencies the following sections outline regulatory compliance information needed in the user documentation and external labels for the host devices into which the NUR3-0W1 is integrated.

When leveraging Nordic ID's grants and certifications, antenna shall be considered in view of the fact that the NUR3-0W1 module has met the essential regulatory requirements with the antennas listed in the context of particular regulatory compliance information (Approved Antennas). Using the antenna that is an approved one, OEM integrator may demonstrate with less effort that the device with the integrated NUR3-0W1 module complies with the requirements.

10.1. EUROPEAN UNION AND EFTA COUNTRIES

USER GUIDE REQUIREMENTS

This apparatus complies the essential requirements of the Radio Equipment Directive (RED) 2014/53/EU. In order to prove presumption of conformity with the essential requirements of the Radio Equipment Directive (RED) 2014/53/EU, following requirements and test methods have been applied to the apparatus:

- article 3.2: ETSI EN 302 208 v3.3.1
  - Radio spectrum matters for Radio Frequency Identification (RFID) equipment operating in the band 865 MHz to 868 MHz with power levels up to 2W

- article 3.1b: ETSI EN 301 489-1 v2.2.3
  - Common ElectroMagnetic Compatibility (EMC) requirements

- article 3.1b: ETSI EN 301 489-3 v2.3.2
  - Specific ElectroMagnetic Compatibility (EMC) conditions for Short-Range Devices (SRD) operating on frequencies between 9 kHz and 246 GHz

- article 3.1a: EN IEC 62368-1:2020 + EN IEC 62368-1:2020/A11:2020
  - General requirements for Safety of Information Technology Equipment

EN 62479: 2010

- Human exposure

EN 62311: 2008

- Human exposure limits

This apparatus complies EU Directive 2011/65/EU, Reduction of Hazardous Substances (RoHS).

Česky

[Czech]

[Nordic ID] tímto prohlašuje, že tento [RFID Radio module NUR3-0W1] je ve shodě sezákladními požadavky a dalšími příslušnými ustanoveními směrnice 2014/53/ES.

Dansk

[Danish]

Undertegnede [Nordic ID] erklærer herved, at følgende udstyr [RFID Radio module NUR3-0W1] overholder de væsentlige krav og øvrige relevante krav i direktiv 2014/53/EF.

Deutsch

[German]

Hiermit erklärt [Nordic ID], dass sich das Gerät [RFID Radio module NUR3-0W1] in Übereinstimmung mit den grundlegenden Anforderungen und den übrigen einschlägigen Bestimmungen der Richtlinie 2014/53/EG befindet.

Eesti

[Estonian]

Käesolevaga kinnitab [Nordic ID] seadme [RFID Radio module NUR3-0W1] vastavust direktiivi 2014/53/EÜ põhinõuetele ja nimetatud direktiivist tulenevatele teistele asjakohastele sätetele.

English

Hereby, [Nordic ID], declares that this [RFID Radio module NUR3-0W1] complies with the essential requirements and other relevant provisions of Directive 2014/53/EU.

Español

[Spanish]

Por medio de la presente [Nordic ID] declara que el [RFID Radio module NUR3-0W1] cumple con los requisitos esenciales y cualesquiera otras disposiciones aplicables o exigibles de la Directiva 2014/53/EU.

Ελληνική

[Greek]

ΜΕ ΤΗΝ ΠΑΡΟΥΣΑ [Nordic ID] ΔΗΛΩΝΕΙ ΟΤΙ [RFID Radio module NUR3-0W1] ΣΥΜΜΟΡΦΩΝΕΤΑΙ ΠΡΟΣ ΤΙΣ ΟΥΣΙΩΔΕΙΣ ΑΠΑΙΤΗΣΕΙΣ ΚΑΙ ΤΙΣ ΛΟΙΠΕΣ ΣΧΕΤΙΚΕΣ ΔΙΑΤΑΞΕΙΣ ΤΗΣ ΟΔΗΓΙΑΣ 2014/53/ΕΚ.

Français

[French]

Par la présente [Nordic ID] déclare que l'appareil [RFID Radio module NUR3-0W1] est conforme aux exigences essentielles et aux autres dispositions pertinentes de la directive 2014/53/EU.

Italiano

[Italian]

Con la presente [Nordic ID] dichiara che questo [RFID Radio module NUR3-0W1] è conforme ai requisiti essenziali ed alle altre disposizioni pertinenti stabilite dalla direttiva 2014/53/EU.

Latviski

[Latvian]

Ar šo [Nordic ID] deklarē, ka [RFID Radio module NUR3-0W1] atbilst Direktīvas 2014/53/EK būtiskajām prasībām un citiem ar to saistītajiem noteikumiem.

Lietuvių

[Lithuanian]

Šiuo [Nordic ID] deklaruoja, kad šis [RFID Radio module NUR3-0W1] atitinka esminius reikalavimus ir kitas 2014/53/EB Direktyvos nuostatas.

Nederlands

[Dutch]

Hierbij verklaart [Nordic ID] dat het toestel [RFID Radio module NUR3-0W1] in overeenstemming is met de essentiële eisen en de andere relevante bepalingen van richtlijn 2014/53/EG.

Malti

[Maltese]

Hawnhekk, [Nordic ID], jiddikjara li dan [RFID Radio module NUR3-0W1] jikkonforma mal-ħtiġijiet essenzjali u ma provvedimenti oħrajn relevanti li hemm fid-Dirrettiva 2014/53/EU.

Magyar

[Hungarian]

Alulírott, [Nordic ID] nyilatkozom, hogy a [RFID Radio module NUR3-0W1] megfelel a vonatkozó alapvetõ követelményeknek és az 2014/53/EU irányelv egyéb elõírásainak.

Polski

[Polish]

Niniejszym [Nordic ID] oświadcza, że [RFID Radio module NUR3-0W1] jest zgodny z zasadniczymi wymogami oraz pozostałymi stosownymi postanowieniami Dyrektywy 2014/53/EU.

Português

[Portuguese]

[Nordic ID] declara que este [RFID Radio module NUR3-0W1] está conforme com os requisitos essenciais e outras disposições da Directiva 2014/53/EU.

Slovensko

[Slovenian]

[Nordic ID] izjavlja, da je ta [RFID Radio module NUR3-0W1] v skladu z bistvenimi zahtevami in ostalimi relevantnimi določili direktive 2014/53/ES.

Slovensky

[Slovak]

[Nordic ID] týmto vyhlasuje, že [RFID Radio module NUR3-0W1] spĺňa základné požiadavky a všetky príslušné ustanovenia Smernice 2014/53/ES.

Suomi

[Finnish]

[Nordic ID] vakuuttaa täten että [RFID Radio module NUR3-0W1] on direktiivin 2014/53/EY oleellisten vaatimusten ja sitä koskevien direktiivin muiden ehtojen mukainen.

Svenska

[Swedish]

Härmed intygar [Nordic ID] att denna [RFID Radio module NUR3-0W1] står i överensstämmelse med de väsentliga egenskapskrav och övriga relevanta bestämmelser som framgår av direktiv 2014/53/EG.

LABELING REQUIREMENTS

The '**CE**' marking must be in a visible area on the OEM product.

APPROVED ANTENNAS

Maximum allowed ERP power in ETSI lower band is 33dBm. NUR3-0W1 has maximum output power of 20dBm. Meaning that 15dBi is the maximum allowed antenna gain without cable losses while operating in ETSI lower band and 18dBi when operating in ETSI upper band which has the maximum ERP power limit of +36dBm.

Formula how to calculate maximum allowed antenna gain while in ETSI lower band:

20 dBm – 2.15 (dipole gain) + [antenna gain dBi] – [cable attenuation dB] < 33dBm.

Formula how to calculate maximum allowed antenna gain while in ETSI upper band:

20 dBm – 2.15 (dipole gain) + [antenna gain dBi] – [cable attenuation dB] < 36dBm.

Beamwidth restrictions (ETSI lower band):

For transmissions ≤500 mW e.r.p. there shall be no restriction on beam width.

For transmissions of > 500 mW e.r.p. to ≤ 1 000 mW e.r.p. beam widths shall be ≤ 180°

For transmissions of > 1 000 mW e.r.p. to 2 000 mW e.r.p. beam widths shall be ≤ 90°

Beamwidth restrictions (ETSI upper band):

For transmissions ≤1000 mW e.r.p. there shall be no restriction on beam width.

For transmissions of > 1000 mW e.r.p. to ≤ 2 000 mW e.r.p. beam widths shall be ≤ 180°

For transmissions of > 2 000 mW e.r.p. to 4 000 mW e.r.p. beam widths shall be ≤ 90°

10.2. FCC

This equipment has been tested and found to comply with the limits for a Class B digital device, pursuant to Part 15 of the FCC Rules. These limits are designed to provide reasonable protection against harmful interference in a residential installation. This equipment generates and can radiate radio frequency energy and, if not installed and used in accordance with the instructions, may cause harmful interference to radio communications. However, there is no guarantee that interference will not occur in a particular installation. If this equipment does cause harmful interference to radio or television reception, which can be determined by turning the equipment off and on, the user is encouraged to try to correct the interference by one of the following measures:

- Reorient or relocate the receiving antenna.
- Increase the separation between the equipment and receiver.
- Connect the equipment into an outlet on a circuit different from that to which the receiver is connected.
- Consult the dealer or an experienced radio/TV technician for help.

This device complies with Part 15 of the FCC Rules. Operation is subject to the following two conditions: (1) This device may not cause harmful interference, and (2) this device must accept any interference received, including interference that may cause undesired operation.

Note: User of the module cannot change the region setting of the module. When FCC region is set, the module operates in frequency band of 902 – 928Mhz.

FCC Caution: Any changes or modifications not expressly approved by the party responsible for compliance could void the user's authority to operate this equipment.

This NUR3-0W1 transmitter module is authorized to be used in other devices only by OEM Integrators under the following conditions:

Note: The antenna must be installed such that the minimum separation distance of 20cm / 8 inch can be maintained between the antenna (radiator) and user's/nearby people's body at all times.

1. The transmitter module must not be co-located with any other transmitter, except with those that are within the limits shown in the NUR3-0W1 filing.
2. The transmitter module can only be used with a host antenna circuit trace layout design in strict compliance with the OEM instructions provided.

When the conditions above are met, typically no radio transmitter testing of NUR3-0W1 is required. However, the OEM integrators have responsibility for testing their end-product for other compliance requirements, for example digital device emissions, PC peripheral requirements.

Note: In the event that these conditions can't be met (for certain configurations or co-location with another transmitter), then the FCC authorization is no longer considered valid and the FCC ID can't be used on the final product. In these circumstances, the OEM integrator will be responsible for re-evaluating the host product (including the transmitter) and obtaining a separate FCC authorization.

The OEM integrator must be aware not to provide information to the end user regarding how to install or remove this RF module in the user manual of the host product.

In case that OEM integrator / host product manufacturer that integrate NUR3-0W1 module into their product and would like change defined parameters of the antenna trace as instructed in this document, they must notify Nordic ID for further instructions. In this case, either Nordic ID can make class 2 permissive change or OEM integrator / host product manufacturer can make change in id procedure (new application) followed by a class 2 permissive change application. If host product manufacturer / OEM integrator is responsible of external antenna connector for their product, they must contact Nordic ID for further instructions. Nordic ID will provide list of acceptable unique connectors that must be used.

For the User's Guide the required FCC statements outlined in the User's Guide Requirements section must be in a prominent location.

USER'S GUIDE REQUIREMENTS

The texts in quotation marks below are the required FCC statements in the user's guide. The note given in brackets is not an FCC statement, but it gives the required information on the first required FCC statement.

"To comply with FCC's RF radiation exposure requirements in general population environment, the antenna(s) used for this transmitter must be installed such that a minimum separation distances of 20cm / 8 inch is maintained between the radiator (antenna) & user's/nearby people's body at all times and must not be co-located or operating in conjunction with any other antenna or transmitter."

"This device complies with Part 15 of the FCC Rules"

"Any changes or modifications to the transmitting module not expressly approved by

Nordic ID Oy could void the user's authority to operate this equipment"

LABELING REQUIREMENTS

The host product must be labelled with the following identification information in a visible area:

"**Contains Transmitter Module FCC ID: SCCNUR30W1**"

or

"**Contains FCC ID: SCCNUR30W1**"

APPROVED ANTENNAS

This radio transmitter 5137A-NUR30W1 has been approved by Innovation, Science and Economic Development Canada to operate with the antenna types listed below, with the maximum permissible gain indicated. Antenna types not included in this list that have a gain greater than the maximum gain indicated for any type listed are strictly prohibited for use with this device.

Option 1:

Manufacturer:	Nordic ID Oy
Antenna Description:	Patch antenna
Frequency range:	902 – 928 MHz
Manufacturer Part Number:	Sampo S0 antenna
Gain:	4.0dBi
Impedance:	50 Ohm

Option 2:

Manufacturer:	Nordic ID Oy
Antenna Description:	Patch antenna
Frequency range:	902 – 928 MHz
Manufacturer Part Number:	Nordic ID S0408 antenna
Gain:	-4.0dBi
Impedance:	50 Ohm

10.3. ISED

This device contains licence-exempt transmitter / receiver that comply with Innovation, Science and Economic Development Canada's licence-exempt RSS. Operation is subject to the following two conditions: (1) this device may not cause interference, and (2) this device must accept any interference, including interference that may cause undesired operation of the device.

Under regulations of Science and Economic Development Canada, this radio transmitter may only operate using an antenna of a type and maximum (or lesser) gain approved for the transmitter by Science and Economic Development Canada. To reduce potential radio interference to other users, the antenna type and its gain should be so chosen that the equivalent isotropic radiated power (e.i.r.p.) is not more than that necessary for successful communication.

To leverage the Nordic ID's grant given by ISED, the device with the integrated NUR3-0W1 module shall be met the following conditions:

1. The certified antenna types and maximum gain are listed later in this document. User of this device or nearby people must not compromise the minimum separation distance of 20cm / 8 inch, in any situation.

2. The antenna(s) used with the NUR3-0W1 module must not be co located in conjunction with any other transmitter or its antenna that is capable of transmitting at the same time, except the transmitter-antenna configurations that are within the limits of the NUR3-0W1's grant given by ISED.

3. The design of an antenna circuit trace layout in a host shall comply with the OEM design instructions provided.

When the conditions above are met, typically no transmitter testing is required, although the OEM integrator shall demonstrate that the host product complies with the other regulatory requirements.

There are no user's documentation requirements other than are required by Science and Economic Development Canada statements outlined in the ISED section in a prominent place in the user's guide.

Note: User of the module cannot change the region setting of the module. When ISED region is set, the module operates in frequency band of 902 – 928Mhz.

LABELLING REQUIREMENTS FOR THE HOST DEVICE

The host product must be labelled with the following identification information in a visible area:

"**Contains ISED: 5137A-NUR30W1**"

CERTIFIED ANTENNAS

This radio transmitter 5137A-NUR30W1 has been approved by Innovation, Science and Economic Development Canada to operate with the antenna types listed below, with the maximum permissible gain

indicated. Antenna types not included in this list that have a gain greater than the maximum gain indicated for any type listed are strictly prohibited for use with this device.

Option 1:

Manufacturer:	Nordic ID Oy
Antenna Description:	Patch antenna
Frequency range:	902 – 928 MHz
Manufacturer Part Number:	Sampo S0 antenna
Gain:	4.0dBi
Impedance:	50 Ohm

Option 2:

Manufacturer:	Nordic ID Oy
Antenna Description:	Patch antenna
Frequency range:	902 – 928 MHz
Manufacturer Part Number:	Nordic ID S0408 antenna
Gain:	-4.0dBi
Impedance:	50 Ohm

10.4. ISED

Cet appareil contient un émetteur / récepteur exempt de licence conforme à la norme RSS d'Innovation, Sciences et Développement économique Canada. Son fonctionnement est soumis aux deux conditions suivantes: (1) cet appareil ne doit pas causer d'interférences et (2) cet appareil doit accepter toute interférence, y compris les interférences pouvant entraîner un fonctionnement non souhaité de l'appareil.

En vertu de la réglementation de Science et Développement économique Canada, cet émetteur radio ne peut fonctionner qu'avec une antenne d'un type et d'un gain maximal (ou inférieur) approuvé pour l'émetteur par Science et Développement économique Canada. Pour réduire le risque d'interférences radio avec d'autres utilisateurs, le type d'antenne et son gain doivent être choisis de manière à ce que la puissance rayonnée isotrope équivalente (p.i.r.e.) ne soit pas supérieure à celle nécessaire au succès de la communication.

Pour tirer parti de la subvention accordée par l'ISED au Nordic ID, l'appareil avec le module intégré NUR3-0W1 doit remplir les conditions suivantes:

1. Les types d'antenne certifiés et le gain maximal sont répertoriés plus loin dans ce document. L'utilisateur de cet appareil ou les personnes à proximité ne doivent en aucun cas compromettre la distance de séparation minimale de 20cm / 8 inch.

2. La ou les antennes utilisées avec le module NUR3-0W1 ne doivent pas être placées en même temps que tout autre émetteur ou son antenne capable d'émettre en même temps, à l'exception des configurations émetteur-antenne qui sont dans les limites de la subvention NUR3-0W1 accordée par ISED.

3. 3. La conception d'un tracé de circuit d'antenne dans un hôte doit être conforme aux instructions de conception OEM fournies.

Lorsque les conditions ci-dessus sont remplies, aucun test de transmetteur n'est généralement requis, même si l'intégrateur OEM doit démontrer que le produit hôte est conforme aux autres exigences réglementaires.

Il n'existe aucune exigence en matière de documentation utilisateur autre que celle requise par les déclarations de Sciences et Développement économique décrites dans la section ISED à un endroit bien en vue dans le guide de l'utilisateur.

Observation:

L'utilisateur du module ne pourra pas changer les paramètres région du module. Quand le paramètre région ISED est sélectionné, le module fonctionne sur la bande de fréquence 902-928Mhz.

EXIGENCES APPLICABLES AUX APPAREILS HÔTES

Le produit fini doit disposer d´étiquette mentionnant les information suivantes d´identification sur une surface visible:

"**Contains ISED: 5137A-NUR30W1**"

TYPES D'ANTENNES ACCEPTABLES

Cet émetteur radio 5137A-NUR30W1 a été approuvé par Innovation, Sciences et Développement économique Canada pour fonctionner avec les types d'antennes énumérés ci-dessous, avec le gain maximal admissible indiqué. Les types d'antenne non inclus dans cette liste et dont le gain est supérieur au gain maximal indiqué pour l'un des types répertoriés ne sont strictement pas autorisés pour une utilisation avec cet appareil.

Option 1:

Manufacturer: Nordic ID Oy

Antenna Description:	Patch antenna
Frequency range:	902 – 928 MHz
Manufacturer Part Number:	Sampo S0 antenna
Gain:	4.0dBi
Impedance:	50 Ohm

Option 2:

Manufacturer:	Nordic ID Oy
Antenna Description:	Patch antenna
Frequency range:	902 – 928 MHz
Manufacturer Part Number:	Nordic ID S0408 antenna
Gain:	-4.0dBi
Impedance:	50 Ohm

11. ABOUT NORDIC ID

Nordic ID is at the centre of today's real-time item tracking and reliable RFID technology. We help organizations fight the damaging effects of item loss, facilitate streamlined business procedures, and stay ahead of the competition.

We are ready to help you take advantage of our wide range of products and services designed to fit your needs. Contact us now, and we will help you to tackle your challenges and get your business to the next level.

Nordic ID

Joensuunkatu 7
24100 Salo
FINLAND

tel. +358 2 727 7700
fax +358 2 727 7720

www: www.nordicid.com
E-mail: info@nordicid.com

12. VERSION HISTORY

Version	Date	Modifications
1.0	15th April 2024	The first draft