製品整理號碼
TT98024

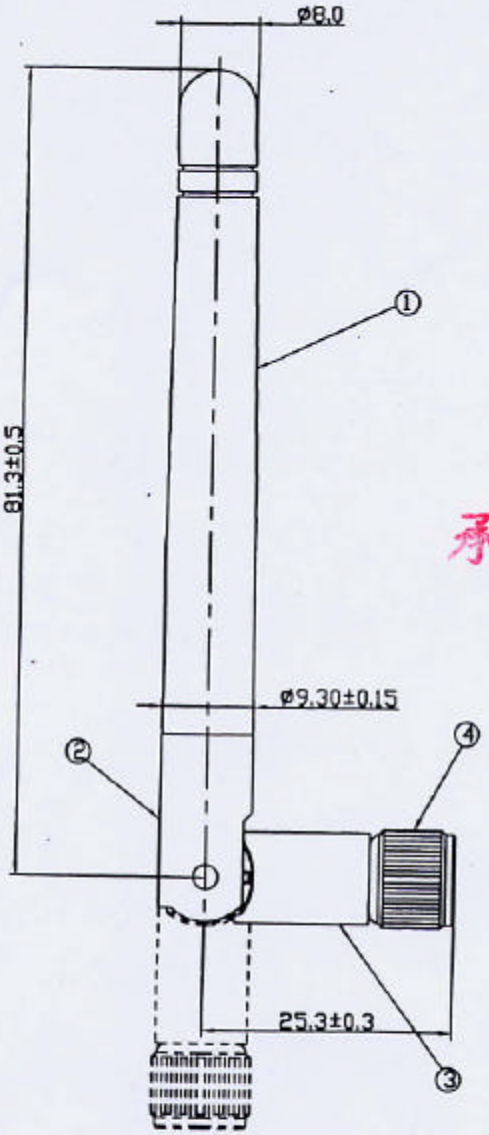

承 認 圖

出圖
JAN 2 6. 2005
東省(股)電機

NOTE:ANTENNA 2.4G+R-SMA,GRAY

角度公差	±3°						
100以上	±0.8	4	CONN.	1			R-SMA
50-100以下	±0.5	3	BASE	1	PC+ABS	GRAY	
5-50以下	±0.3	2	UPPER	1	PC+ABS	GRAY	
5以下	±0.2	1	BOOT	1	TPU	GRAY	
未指定容許差之公差		符號	名稱	數量	材質	處理	關連仕樣

記號	來歷	年月日	氏名	投影法	單位	尺度	製品名	ANTB98-024
				三角法	mm	/	圖名	製品圖
				承認	檢認	設計	圖號	C94M0101
				水巡	王 忠嶽	楊 惠蘭		

東省電機股份有限公司

SPECIFICATION	APVD	CHKD	DSGD
	廖水巡	王忠嶽	楊惠籃
	2005.01.26	2005.01.25	2005.01.25
PRODUCT CODE: TT98024			

1. General:

1.1 Scope

This specification is applied for fixed 1/2λ Dipole antenna.
(Type 2.4GHz external standard dipole antenna.)

1.2 Operating Temperature

-10℃ +75℃

1.3 Storage Temperature

-20℃ +75℃

1.4 Test conditions

Standard test conditions should be from 5 to 35℃ in temperature , 45 to 85%RH and 860 to 1060 hpa in barometric pressure. Should conducted at 20±2℃,65±5%RH and 860 to 1060 hpa.

2. Appearances, structures and dimensions:

2.1 Appearances

Finished on each part should be good, functionally free from rust, Crack and scratch.

2.2 Structures and dimensions

They are produced according to the drawing of individual product.

3. Electrical performance:

	Property	Test conditions	Performance
3.1	VSWR	Proving the suitable test ,according to custamer' s request and all the necessary condition of the set.	< 2.0
	Frequency Range		2400-2500MHz
3.2	Impedance		50±2 ohms
3.3	Directional		Omni
3.4	Antenna gain		0.6~2.0 dBi
3.5	Tolerance power		1w

4.Material specification:

Item	Material	Characteristic
Cover	Thermal Plastic Elastormer	Hardness:65 (Gray)
Wire	RG178 Coaxial Cable	Tint Brown

5.Coaxial Cable Charcterictic:

5.1.Mechanical characterisitics

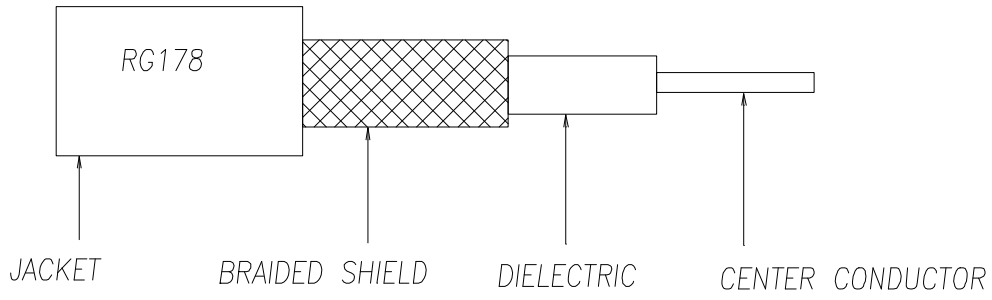

Center conductor	Material	SCCS
	Composition(N/M)	7/0.08mm
	O.D.	0.30mm
Dielectric	Material	PTFE
	O.D.	0.83Min
Braided Shield	Material	SPC
	Coverage	85%Min
	Strands	ψ0.06mm
Jacket	Material	FEP
	O.D.	1.89mm

5.2. Electric data

Item	Specification	Unit
Capacitance	85	PF/M
Impedance	50 ± 2	Ω
Attenuation	3.5(3GHz)	Db/M

6.Weather ability:

	Property	Test condition	Performance
6.1	Dry heat proof	After leaving 96 hours at temperature 75±2℃,leave 1 hour in a normal ambient condition and measure. Clean the appearance before test.	There shall be no detects on cover broken or antenna drop out, satisfy item-3.
6.2	Cold proof	After leaving 96 hours at temperature –30±2℃,leave 1 hour in a normal ambient condition and measure. Clean the appearance before test.	There shall be no detects on cover broken or antenna drop out, satisfy item-3.
6.3	Damp heat proof	After leaving 96 hours at temperature 40±3℃ and 90 to 95%RH,leave 1 hour in a normal ambient condition and measure. Clean the appearance before test.	There shall be no detects on cover broken or antenna drop out, satisfy item-3.

7.Sample dependability(O.C Standard):

According to MIL-STD-105D
(About 1/200 pcs ungainly to repeal one lot in all quantity.)

8.Measurement instrument:

8.1 PC SIZE: PC-9801FA (NEC)
8.2 Room size: 400cm (W)X350cm(H)X630cm(L)
8.3 Net work analyzer:
Test equipment on electrical functions
Equipment by Hewlett Packard, Network Analyzer HP-8752A
by Advantest, Network Analyzer R3767CG

9.Packing Instructions:

One parcel bag contain = 15 pcs
One middle box contain = 14 parcel bags (15 pcs x 14 parcel bags =210 pcs)
One master carton contains =3 middle boxs (3x middle boxs = 630 pcs)

Measurement Condition Diagram

(1).Electrical Performance Measurement:

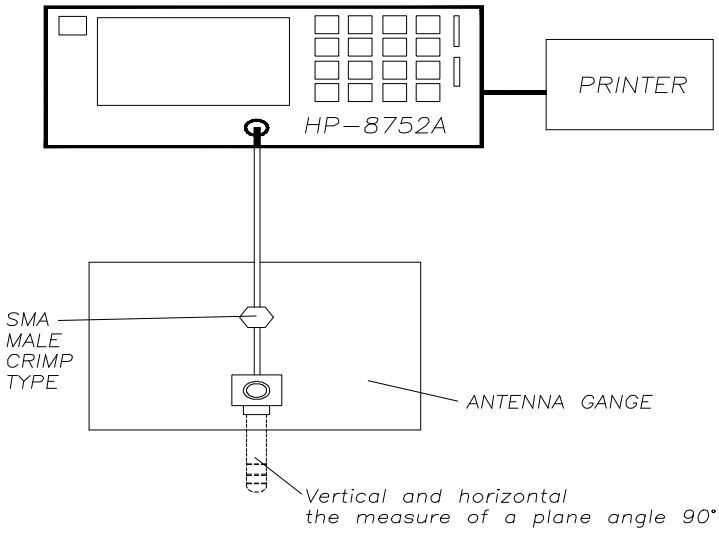

(2).Radiation Pattern Measurement:

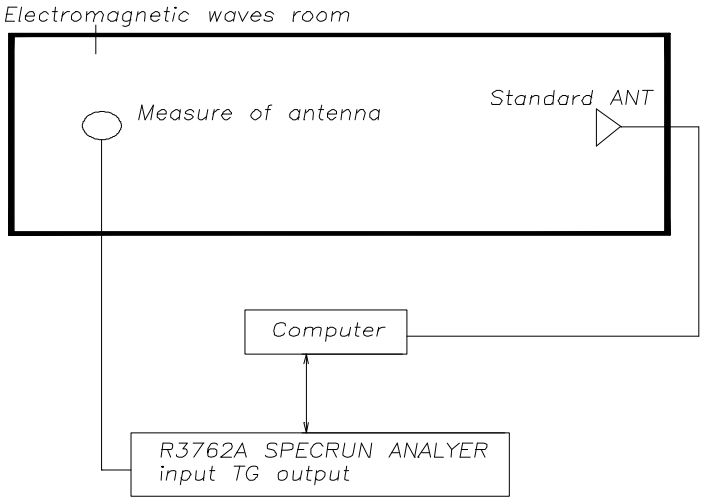

Performance Data Sheet

(1).Electrical Performance Data:

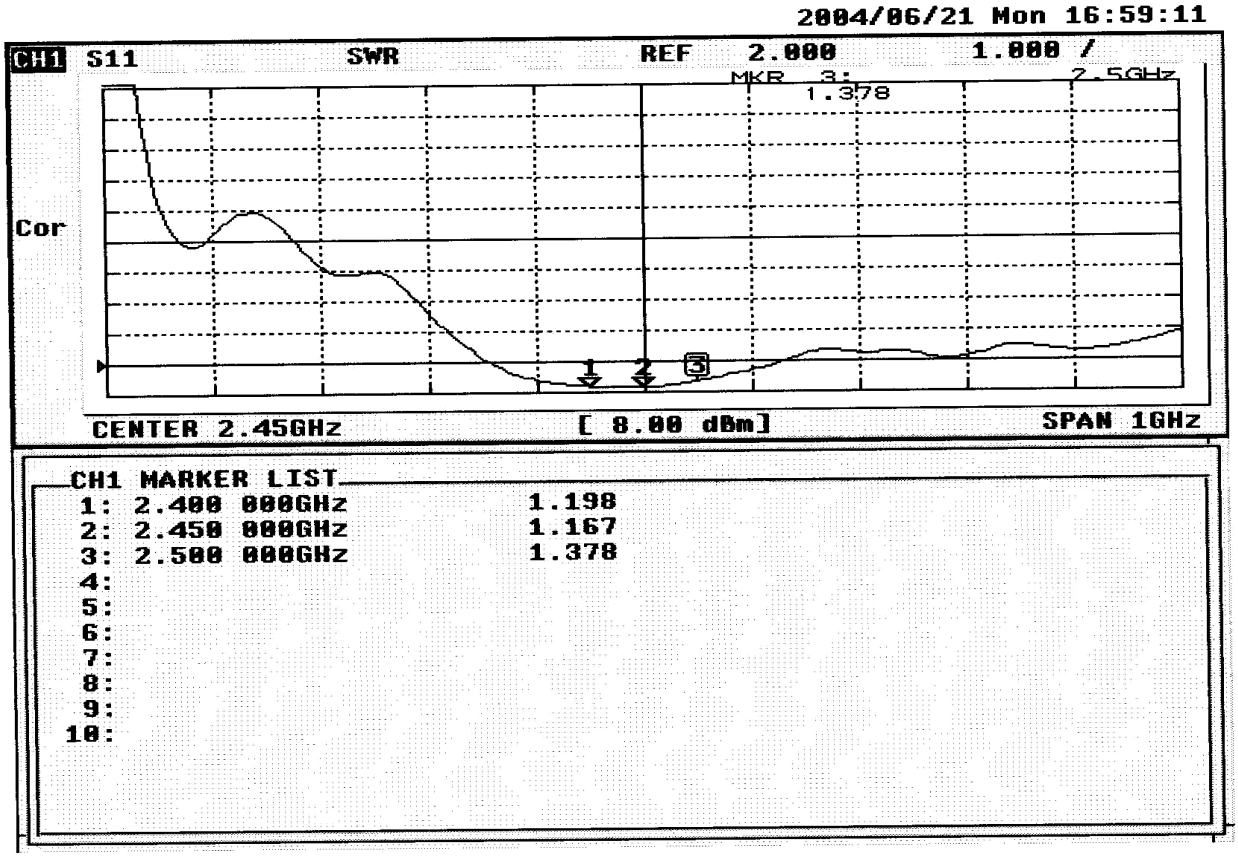

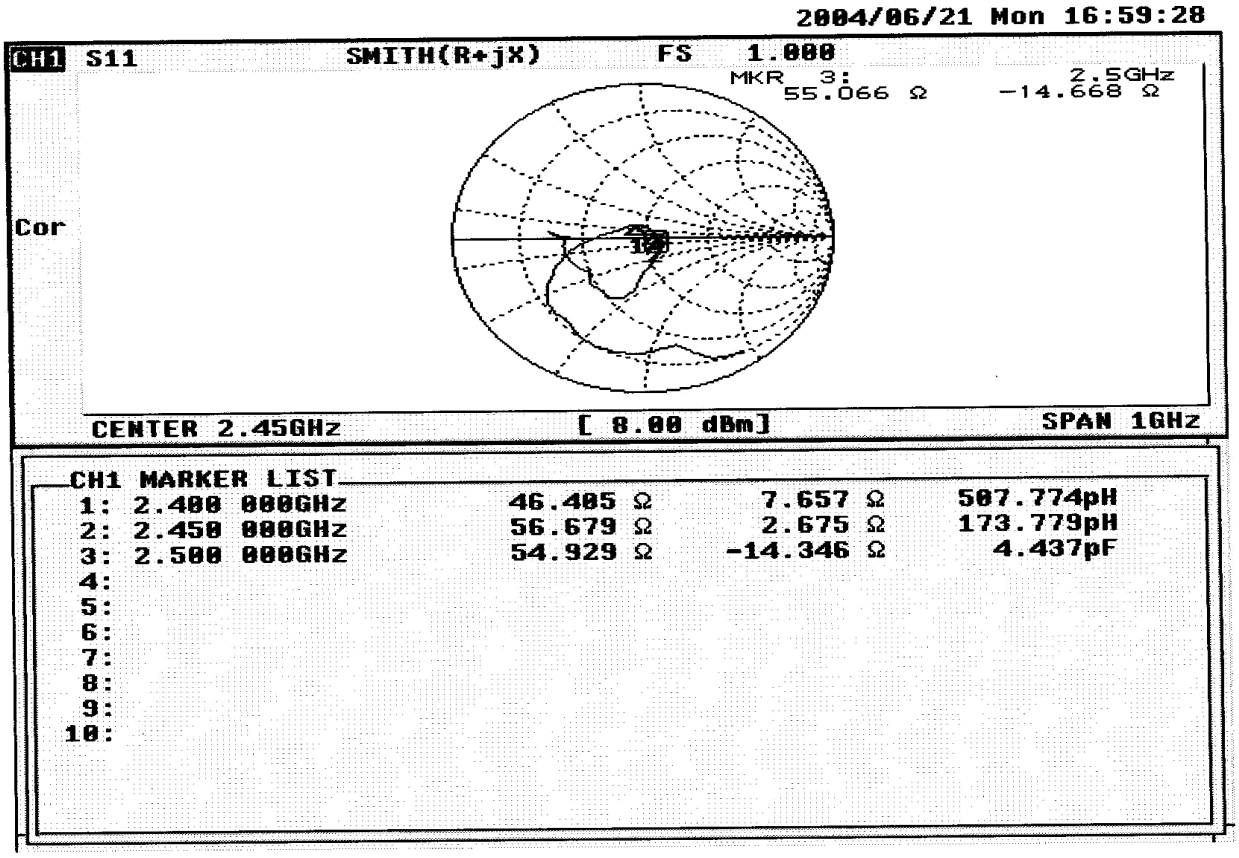

Performance Data Sheet

(2).Vertical-Plane Radiation Pattern Data:

2004年6月21日

天線指向性／増益

天 線 名 称　: Unitcation WLAN 2.4GHz Antenna
　　: 2400-2500MHz
　　: H-Pattern
測 定 頻 率　: 2400 MHz
標準天線電平 : -50.6 dBm
天 線 増 益　: -0.1 dBd (2.0 dBi)
平 均 増 益　: -1.4 dBd

垂直面 前／後 方向図
(Z-X PLANE)

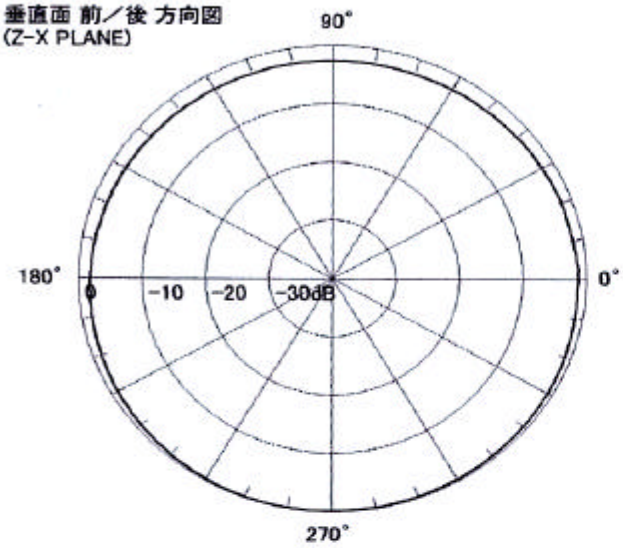

FILE NAME = 0406211631.dat

天 線 名 称　: Unitcation WLAN 2.4GHz Antenna
　　: 2400-2500MHz
　　: H-Pattern
測 定 頻 率　: 2450 MHz
標準天線電平 : -51.2 dBm
天 線 増 益　: -0.2 dBd (2.0 dBi)
平 均 増 益　: -1.3 dBd

垂直面 前／後 方向図
(Z-X PLANE)

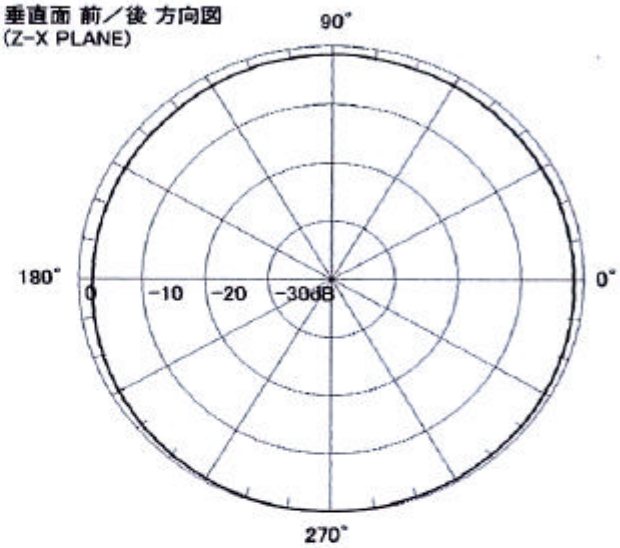

FILE NAME = 0406211632.dat

天 線 名 称　: Unitcation WLAN 2.4GHz Antenna
　　: 2400-2500MHz
　　: H-Pattern
測 定 頻 率　: 2500 MHz
標準天線電平 : -52.6 dBm
天 線 増 益　: -0.3 dBd (1.9 dBi)
平 均 増 益　: -1.3 dBd

垂直面 前／後 方向図
(Z-X PLANE)

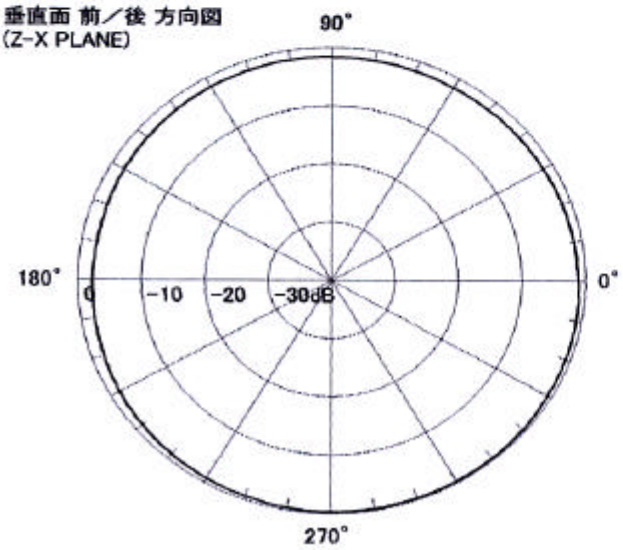

FILE NAME = 0406211633.dat

Performance Data Sheet

(3). Horizontal-Plane Radiation Pattern Data:

2004年6月21日

天線指向性／増益

天 線 名 称 : Unitcation WLAN 2.4GHz Antenna
: 2400-2500MHz
: E-Pattern
測 定 頻 率 : 2400 MHz
標準天線電平 : -50.6 dBm
天 線 増 益 : -1.6 dBd (0.6 dBi)
平 均 増 益 : -4.8 dBd

水 平 面 方向図
(X-Y PLANE)

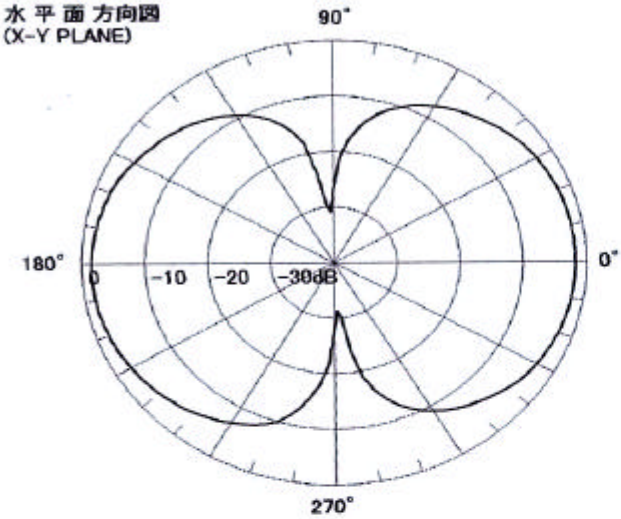

FILE NAME = 0406211623.dat

天 線 名 称 : Unitcation WLAN 2.4GHz Antenna
: 2400-2500MHz
: E-Pattern
測 定 頻 率 : 2450 MHz
標準天線電平 : -51.2 dBm
天 線 増 益 : -1.5 dBd (0.6 dBi)
平 均 増 益 : -4.9 dBd

水 平 面 方向図
(X-Y PLANE)

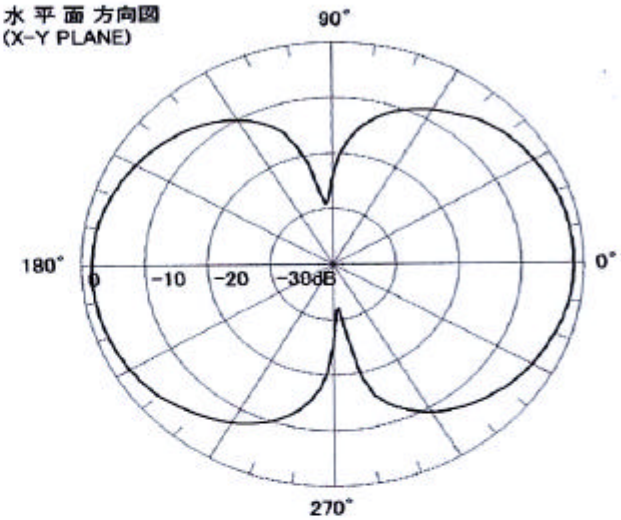

FILE NAME = 0406211624.dat

天 線 名 称 : Unitcation WLAN 2.4GHz Antenna
: 2400-2500MHz
: E-Pattern
測 定 頻 率 : 2500 MHz
標準天線電平 : -52.6 dBm
天 線 増 益 : -0.6 dBd (1.6 dBi)
平 均 増 益 : -4.0 dBd

水 平 面 方向図
(X-Y PLANE)

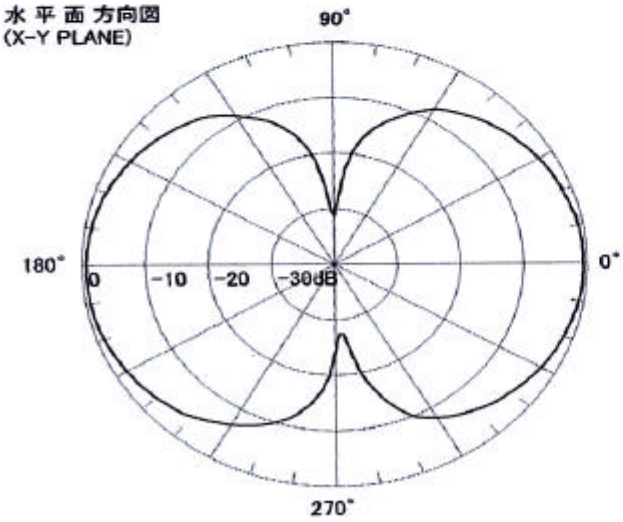

FILE NAME = 0406211625.dat