T E S T R E P O R T
No.: 18-1-0002601T02

According to:
FCC Regulations
Part 15.247

for

Agilion GmbH

WIRELESS TAG EPAPER 4
WIRELESS TAG EPAPER 4 PULSE | PHASE

FCC-ID: SCF6032702

Laboratory Accreditation and Listings		
DAkkS Deutsche Akkreditierungsstelle D-PL-12047-01-01 Accredited EMC-Test Laboratory	Industry Canada Reg. No.: 3462D-1 Reg. No.: 3462D-2 Reg. No.: 3462D-3	Voluntary Controls for Electromagnetic Emissions Reg. No.: R-20013, C-20009, T-20006, G-20013
Wi Fi ALLIANCE AUTHORIZED RF LABORATORY	ctia Authorized™ Test Lab Lab Code: 20011130-00	FCC FEDERAL COMMUNICATIONS COMMISSION USA MRA US-EU 0003
accredited according to DIN EN ISO/IEC 17025		
CETECOM GmbH Laboratory Radio Communications & Electromagnetic Compatibility Im Teelbruch 116 • 45219 Essen • Germany Registered in Essen, Germany, Reg. No.: HRB Essen 8984 Tel.: + 49 (0) 20 54 / 95 19-954 • Fax: + 49 (0) 20 54 / 95 19-964 E-mail: info@cetecom.com • Internet: www.cetecom.com		
Laboratory Accreditation and Listings		

Table of contents

1. SUMMARY OF TEST RESULTS 3

1.1. Tests measurement overview according of US CFR Title 47, Subpart 15C 3

2. ADMINISTRATIVE DATA 5

2.1. Identification of the testing laboratory 5
2.2. Test location 5
2.3. Organizational items 5
2.4. Applicant's details 5
2.5. Manufacturer's details 5

3. EQUIPMENT UNDER TEST (EUT) 6

3.1. TECHNICAL DATA OF MAIN EUT DECLARED BY APPLICANT 6
3.2. EUT: Type, S/N etc. and short descriptions used in this test report 6
3.3. Auxiliary Equipment (AE): Type, S/N etc. and short descriptions 6
3.4. EUT set-ups 7
3.5. EUT operating modes 7

4. DESCRIPTION OF TEST SYSTEM SET-UP'S 8

4.1. Test system set-up for radiated magnetic field measurements below 30 MHz 8
4.2. Test system set-up for radiated electric field measurement 30 MHz to 1 GHz 9
4.3. Test system set-up for radiated electric field measurement above 1 GHz 10
4.4. Test system set-up for conducted RF-measurement at antenna port 11

5. MEASUREMENTS 12

5.1. Duty-Cycle 12
5.2. RF-Parameter - 6 dB Bandwidth and 99% occupied bandwidth 13
5.3. Maximum peak conducted output power 15
5.4. RF-Parameter - Power Spectral Density 17
5.5. 20 dBc power specification 18
5.6. General Limit - Radiated field strength emissions below 30 MHz 20
5.7. General Limit - Radiated field strength emissions, 30 MHz - 1 GHz 22
5.8. General Limit – Radiated field strength emissions, above 1 GHz 24
5.9. Measurement uncertainties 26

6. ABBREVIATIONS USED IN THIS REPORT 27

7. ACCREDITATION DETAILS OF CETECOM'S LABORATORIES AND TEST SITES 27

8. INSTRUMENTS AND ANCILLARY 28

8.1. **Used equiment "CTC"** 28

9. VERSIONS OF TEST REPORTS (CHANGE HISTORY) 31

Table of annex

Separate document annex 1: Measurement diagrams

Separate document annex 2: External photographs of EUT

Separate document annex 3: Internal photographs of EUT

Separate document annex 4: Test set-up photographs

The listed attachments are an integral part of this report.

1. Summary of test results

The test results apply exclusively to the test samples as presented in this report. The CETECOM GmbH does not assume responsibility for any conclusions and generalizations taken in conjunction with other specimens or samples of the type of the item presented to tests. Also we refer on special conditions which the applicant should fulfill according §2.927 to §2.948, special focus regarding modification of the equipment and availability of sample equipment for market surveillance tests.

The presented Equipment Under Test (in this report, hereinafter referred as EUT) supports radiofrequency technologies with similar ZigBee technology and operating frequency range at 2.405 to 2.480 GHz. Other implemented wireless technologies were not considered within this test report.

Following test cases have been performed to show compliance with valid Part 15.207/15.209/15.247 of the FCC CFR Title 47 Rules, Edition November 2017.

1.1. Tests measurement overview according of US CFR Title 47, Subpart 15C

Test cases	Port	References & Limits			EUT set-up	EUT opera-ting mode	Result
		FCC Standard		Test Limit			
Timing of transmitter (pulsed operation)	Antenna Terminal or enclosure	§15.35		--	2	1	--
6 dB bandwidth	Antenna terminal (conducted)	§15.247(a)(2)		≥ 500 kHz for DTS systems	2	1	passed
99% occupied bandwidth	Antenna terminal (conducted)	2.1049(h)		99% Power bandwidth	2	1	for Information only
Transmitter Peak output power	Antenna terminal (conducted)	§15.247(b)(3)		1 Watt Peak	2	1	passed
Transmitter Peak output power radiated	Enclosure + Inter-connecting cables (radiated)	§15.247(b)(4)		< 4 Watt (EIRP) for antenna with directional gain less 6dBi	2	1	passed
Out-Of-Band RF- emissions Band-Edge emissions	Antenna terminal (conducted)	§15.247 (d)		20 dBc	2,1	1	passed
Power spectral density	Antenna terminal (conducted)	§15.247(e)		8dBm in any 3 kHz band	2	1	passed
General field strength emissions + restricted bands	Enclosure + Inter-connecting cables (radiated)	§15.247 (d) §15.205 §15.209		Emissions in restricted bands must meet the general field-strength radiated limits	1	1	passed

RF-Exposure Evaluation							
Test cases	**Port**	**References & Limits**			**EUT set-up**	**EUT opera-ting mode**	**Result**
		FCC Standard		**Test Limit**			
Radio frequency radiation exposure requirements	Cabinet + Inter-connecting cables (radiated)	§1.1310(b) §2.1091 §2.1093		**SAR-Limits FCC:** 1.1310(b)	--	--	N/A (distance > 20cm to user –see manual)
				RF-Field Strength Limits FCC: "general population/ uncontrolled" environment Table 1	--	--	See separate test report/ evaluation 17-1-0264601T06

Remark: --

Digital unterschrieben von Piotr Sardyko
DN: cn=Piotr Sardyko, o=CETECOM GmbH, ou=RC & EMC, email=piotr.sardyko@cetecom.com, c=DE
Datum: 2018.05.07 16:14:52 +02'00'

....

Dipl.-Ing. Rachid Acharkaoui
Responsible for test section

B.Sc. Piotr Sardyko
Responsible for test report

2. Administrative Data

2.1. Identification of the testing laboratory

Company name:	CETECOM GmbH
Address:	Im Teelbruch 116 45219 Essen - Kettwig Germany
Responsible for testing laboratory:	Dipl.-Ing. Rachid Acharkaoui
Deputy:	Dipl.-Ing. Niels Jeß

2.2. Test location

2.2.1. Test laboratory "CTC"

Company name:	see chapter 2.1. Identification of the testing laboratory

2.3. Organizational items

Responsible for test report and project leader:	B.Sc. Piotr Sardyko
Receipt of EUT:	2018 February
Date(s) of test:	2018 March/April
Date of report:	2018-05-01
Version of template: 13.02	

2.4. Applicant's details

Applicant's name:	Agilion GmbH
Address:	Blankenauer Str. 74 09113 Chemnitz Germany
Contact person:	Mr. Sven Sieber

2.5. Manufacturer's details

Manufacturer's name:	please see Applicant's details
Address:	please see Applicant's details

3. Equipment under test (EUT)

3.1. TECHNICAL DATA OF MAIN EUT DECLARED BY APPLICANT

Main function	Communication and Real Time Location System		
Device type	Mobile Device		
Frequency range	☐ 915 MHz band ☒ 2.4 GHz band		
Type of modulation	Digital (DTS) (Phase)		
Number of channels	2405 to 2480 MHz with 5 MHz channel space		
Antenna Type	☒ Integrated ☐ External, no RF- connector ☐ External, separate RF-connector		
MAX Field strength (radiated):	99 dBµV/m@3m distance and 2440 MHz (Channel 18) (measured)		
Power settings for test purposes:	Channel 11 and 18: 0 setting in software Channel 26: 11 setting in software		
Installed options			
Power supply	☒ DC power only: battery 3.6 V		
EUT sample type	☒ Production	☐ Pre-Production	☐ Engineering
FCC label attached	☐ yes	☒ no	

3.2. EUT: Type, S/N etc. and short descriptions used in this test report

Short descrip-tion*)	EUT	Type	S/N serial number	HW hardware status	SW software status
EUT A	WIRELESS TAG EPAPER 4 (radiated sample)	6032702	A37367	0587	2.0.18
EUT B	WIRELESS TAG EPAPER 4 (conducted sample)	6032702	A40579	0587	2.0.18

*) EUT short description is used to simplify the identification of the EUT in this test report.

3.3. Auxiliary Equipment (AE): Type, S/N etc. and short descriptions

AE short descrip-tion *)	Auxiliary Equipment	Type	S/N serial number	HW hardware status	SW software status
AE 1	Notebook	Acer Aspire One 722 Notebook	-	-	Windows 10 + TestModes MESH PPP SW V1.0.0
AE 2	Cable with debug interface	1,5 m	-	-	-

*) AE short description is used to simplify the identification of the auxiliary equipment in this test report.

3.4. EUT set-ups

EUT set-up no.*)	Combination of EUT and AE	Remarks
set. 1	EUT A + AE 1 + AE 2	Radiated RF-setup, AE1 and AE2 are used temporary for RF-connection set-up
set. 2	EUT B + AE 1 + AE 2	Conducted RF-setup, AE1 and AE2 are used temporary for RF-connection set-up

*) EUT set-up no. is used to simplify the identification of the EUT set-up in this test report.

3.5. EUT operating modes

EUT operating mode no.*)	Description of operating modes	Additional information
op. 1	TX, on (RFR2-Mode setting)	Continuous TX-Mode, set-up by special software and with help of PC. Power setting=0 for all channels except channel 26 where a value of 11 apply. Duty-Cycle=100%

*) EUT operating mode no. is used to simplify the test report.

4. Description of test system set-up's

4.1. Test system set-up for radiated magnetic field measurements below 30 MHz

Specification: ANSI C63.4-2014 §5.3, §8.2.1, §8.3.1.1+§8.3.2.1 , ANSI C63.10-2013 chapter 6.4 (§6.4.4.2)

General Description: Evaluating the radiated field emissions are done first by an exploratory emission measurement and a final measurement for most critical frequencies determined.

The loop antenna was placed at 1 m height above ground plane and 3 m measurement distance from set-up for investigations. Because of reduced measurement distance, correction data were applied, as stated in chapter "General Limit - Radiated field strength emissions below 30 MHz". The tests are performed in the semi anechoic room recognized by the regulatory commission.

Schematic:

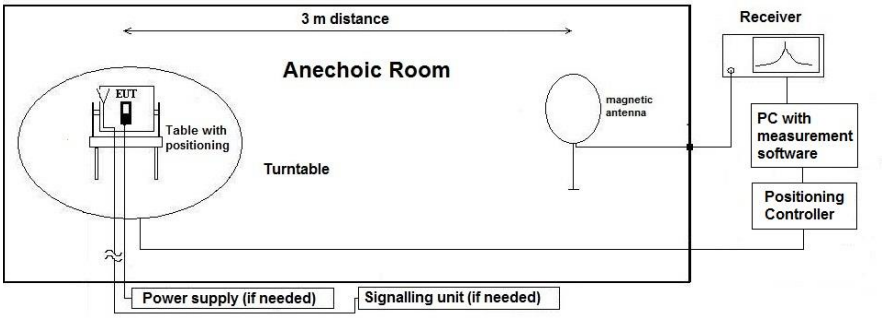

Testing method:

Exploratory, preliminary measurement
The EUT and it's associated accessories are placed on a non-conductive position manipulator (tipping device) of 0.8 m height which is placed on the turntable. By rotating the turntable (step 90°, range 0°to 360°) and the EUT itself either on 3-orthogonal axis (portable equipment) or 2-orthogonal axis (defined operational position of EUT), the emission spectrum was recorded. The loop antenna was moved at least to 2-perpendicular axes (antenna vector in direction of EUT and parallel to EUT) in order to maximize the emissions. The results are documented in a diagram. Critical frequencies (low margin to limit) are saved within a data reduction table for further investigations. If various operating modes are supported, further investigations are made to find the worst-case. Also the interconnection cables and equipment position were varied in order to maximize the emissions.

Final measurement on critical frequencies
Based on the exploratory measurements, the most critical frequencies are re-measured by maintaining the EUT's worst-case operation mode, cable position, etc.

First a frequency zoom around the critical frequency is done to locate the frequency more precisely. After this step, for all identified critical frequencies, the maximum peak was determined.

Following parameters were varied: the turntable angle continuously in the range 0 to 360 degree, the EUT itself either over 3-orthogonal axis (not defined usage position) or 2-orthogonal axis (defined usage position).

On the determined worst-case position, a final measurement with necessary bandwidth and detector according standard has been carried out.

Formula:

$E_C = E_R + AF + C_L + D_F - G_A$

$M = L_T - E_C$

AF =Antenna factor
C_L = Cable loss
D_F= Distance correction factor
E_C = Electrical field – corrected value
E_R = Receiver reading
G_A= Gain of pre-amplifier (if used)
L_T = Limit
M = Margin

All units are dB-units, positive margin means value is below limit.

Distance correction: Reference for applied correction (extrapolating) factors due to reduced measurement distance:
ANSI C63.10:2013, §6.4.4.2 - Equations (2) + (3) + (4)

4.2. Test system set-up for radiated electric field measurement 30 MHz to 1 GHz

Specification: ANSI C63.4-2014 chapter 8.2.3, ANSI C63.10-2013 chapter 6.5

General Description: Evaluating the field emissions have to be done first by an exploratory emissions measurement and a final measurement for most critical frequencies. The tests are performed in a NSA-compliant semi anechoic room (SAR) recognized by the regulatory commissions.

Schematic:

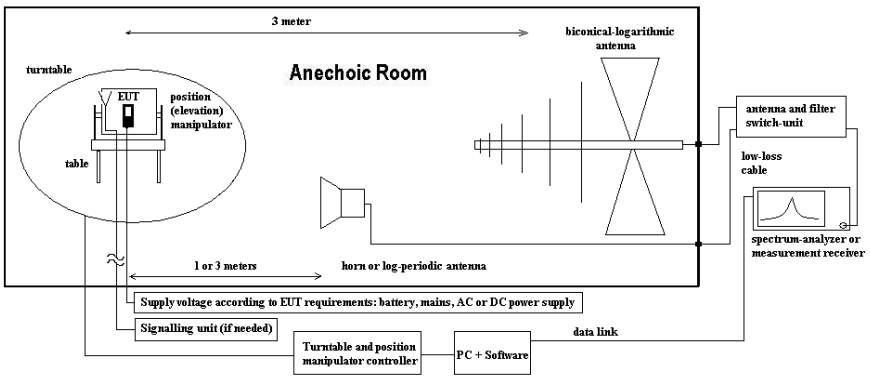

Testing method:

Exploratory, preliminary measurements
The EUT and its associated accessories are placed on a non-conductive position manipulator (tipping device) of 0.8 m height which is placed on the turntable. By rotating the turntable (range 0° to 360°, step 90°) and the EUT itself either on 3-orthogonal axis (portable equipment) or 2-orthogonal axis (defined operational position of EUT) the emission spectrum and it's characteristics was recorded with an EMI-receiver, broadband antenna and software.

Measurement antenna: horizontal and vertical, heights: 1,0 m and 1,82 m as worst-case determined by an exploratory emission measurements. The results are documented in a diagram. Critical frequencies (low margin to limit) are saved within a table for further investigations. If various operating modes are supported, further investigations are made to find the worst-case of them. Also the interconnection cables and equipment position were varied in order to maximize the emissions.

Final measurement on critical frequencies
Based on the exploratory measurements, the most critical frequencies are re-measured by maintaining the EUT's worst-case operation mode, cable position, etc. either on 10m OATS or 3m semi-anechoic room.

First a frequency zoom around the critical frequency is done to locate the frequency more precisely. After this step, for all identified critical frequencies, the maximum peak was determined.

Following parameters were varied: the turntable angle continuously in the range 0 to 360 degree, the EUT itself either over 3-orthogonal axis (not defined usage position) or 2-orthogonal axis (defined usage position). The measurement antenna height between 1 m and 4 m.

On the determined worst-case position, a final measurement with necessary bandwidth and detector according standard has been carried out.

Formula:

$E_C = E_R + AF + C_L + D_F - G_A$ (1)

$M = L_T - E_C$ (2)

AF = Antenna factor
C_L = Cable loss
D_F = Distance correction factor (if used)
E_C = Electrical field – corrected value
E_R = Receiver reading
G_A = Gain of pre-amplifier (if used)
L_T = Limit
M = Margin

All units are dB-units, positive margin means value is below limit.

4.3. Test system set-up for radiated electric field measurement above 1 GHz

Specification: ANSI C63.4-2014 chapter 8.3, ANSI C63.10-2013 chapter 6.6.3.3 & 6.6.4

General Description: Evaluating the emissions have to be done first by an exploratory emissions measurement and a final measurement for most critical frequencies. The tests are performed in a CISPR 16-1-4:2010 compliant fully anechoic room (FAR) recognized by the regulatory commission. The measurement distance was set to 3 meter for frequencies up to 18 GHz and 2 meter above 18 GHz. A logarithmic periodic antenna is used for the frequency range 30 MHz to 1 GHz. Horn antennas are used for frequency range 1 GHz to 40 GHz. The EUT is aligned within 3 dB beam width of the measurement antenna with three orthogonal axis measurements on the EUT.

Schematic:

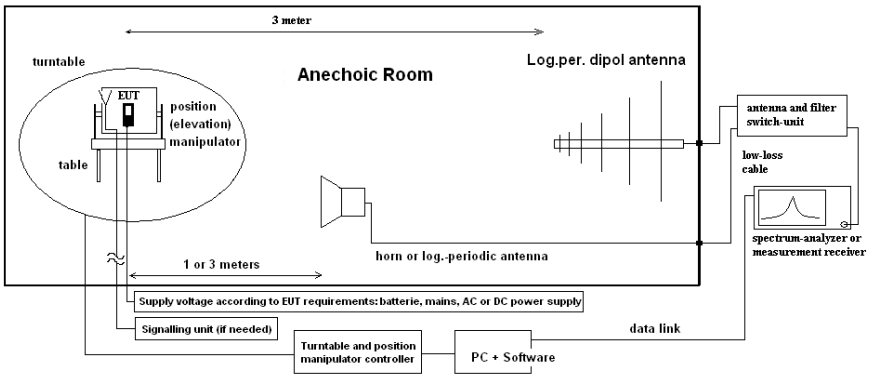

Testing method:

Exploratory, preliminary measurements
The EUT and its associated accessories are placed on a non-conductive position manipulator (tipping device) of 1.55 m height which is placed on the turntable. By rotating the turntable (range 0° to 360°, step 15°) and the EUT itself either on 3-orthogonal axis (portable equipment) or 2-orthogonal axis (defined operational position of EUT) the emission spectrum and it's characteristics was recorded with an EMI-receiver, broadband antenna and software.
The measurements are performed in horizontal and vertical polarization of the measurement antennas. The results are documented in a diagram. Critical frequencies (low margin to limit) are saved within a table for further investigations. If various operating modes are supported, further investigations are made to find the worst-case of them. Also the interconnection cables and equipment position were varied in order to maximize the emissions.

Final measurement on critical frequencies
Based on the exploratory measurements, the most critical frequencies are re-measured by maintaining the EUT's worst-case operation mode, cable position, etc.

First a frequency zoom around the critical frequency is done to locate the frequency more precisely. After this step, for all identified critical frequencies, the maximum peak was determined. Following parameters were varied: the turntable angle continuously in the range 0 to 360 degree, the EUT itself over 3-orthogonal axis and the height for EUT with large dimensions.

On the determined worst-case position, a final measurement with necessary bandwidth and detector according standard has been carried out.
On the determined worst-case position, a final measurement with necessary bandwidth and detector according standard has been carried out.

Formula:

$E_C = E_R + AF + C_L + D_F - G_A$ (1)

$M = L_T - E_C$ (2)

E_C = Electrical field – corrected value
E_R = Receiver reading
M = Margin
L_T = Limit
AF = Antenna factor
C_L = Cable loss
D_F = Distance correction factor (if used)
G_A = Gain of pre-amplifier (if used)

All units are dB-units, positive margin means value is below limit.

4.4. Test system set-up for conducted RF-measurement at antenna port

Specification: ANSI C63.13-2013

General Description: In order to avoid overload, the EUT's RF-signal is first attenuated before it is connected to the spectrum – analyzer/ power meter. The specific attenuation is determined prior to the measurement within a set-up calibration. The power measurement is done either with a suitable power meter or a spectrum analyzer. The value is taken into account by correcting the measurement readings on the spectrum-analyzer either by a transducer factor (TDF) or an relative offset to reference level.

Schematic:

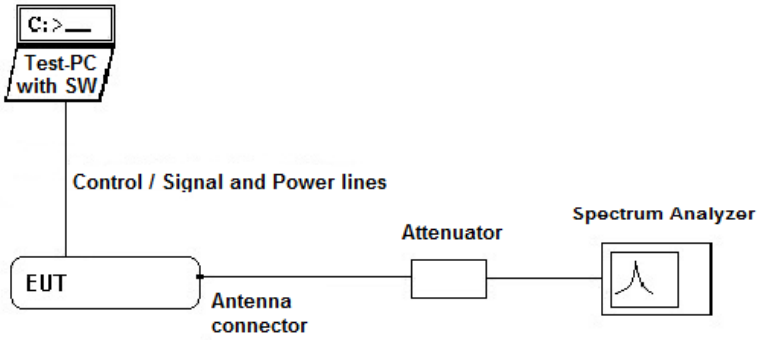

Testing method for DTS devices: ANSI C63.10: 2013 Chapter 11.9.2.3.1+ KDB DTS558074 D01 v04

5. Measurements

5.1. Duty-Cycle

5.1.1. Test location and equipment **(for reference numbers please see chapter 'List of test equipment')**

Ref.-No.	Equipment	Type	Serial-No.
714	Spectrum Analyzer	R&S FSW67	104023
087	Power supply	EA 3013 S	-
-	RF cable	Rosenberger	X105
-	Attenuator 10 dB	Huber+Suhner	-

Method of measurement: ☒ conducted
☐ radiated

A special program is used for test purposes. In opposite to normal operating mode a higher duty-cycle is set in order to facilitate the measurements. This is maximized at the extent possible.

The necessary duty-cycle correction factor is determined on nominal conditions on one channel in each operable frequency-band. It is assumed that no noticeable changes occur when tested on other channels or climatic conditions.

Results:

Diagrams show a duty-cycle of 1.

☐ The results were corrected in order to evaluate for worst-case result each time when average values are necessary for example average radiated emissions or similar
☒ No correction necessary: Duty-Cycle > 98 %

5.2. RF-Parameter - 6 dB Bandwidth and 99% occupied bandwidth

5.2.1. Test equipment for 6 dB Bandwidth test (for reference numbers please see chapter 'List of test equipment')

test site	☐ 441 EMI SAR	☐ 348 EMI cond.	☐ 443 EMI FAR	☒ 347 Radio.lab.	☐ 337 OATS	☐
spectr. analys.	☐ 584 FSU	☐ 120 FSEM	☐ 264 FSEK	☐ 489 ESU	☒ 683 FSU26	☐
attenuator	☒ 530 10 dB	☐	☐	☐	☐	☐
signaling	☐ 392 MT8820A	☐ 436 CMU	☐ 547 CMU			
DC power	☐ 463 HP3245A	☐ 087 EA3013	☐ 354 NGPE 40	☐ 086 LNG50-10	☐	☐
Power supply voltage	☐ V DC		☒ 060 120 V 60 Hz via PAS 5000 and AE1			
Others	☐ 613 20dB Attenuator		☒ cable K5			

5.2.2. Test equipment for 99% occupied bandwidth test

Ref.-No.	Equipment	Type	Serial-No.
714	Spectrum Analyzer	R&S FSW67	104023
087	Power supply	EA 3013 S	-
-	RF cable	Rosenberger	X105
-	Attenuator 10 dB	Huber+Suhner	-

5.2.3. References of occupied and emission bandwidth

§15.247(a)(2), RSS-247, Chapter 5.2(1); RSS-Gen Issue 4: Chapter 4.6.2

(2) *DSSS Systems using digital modulation techniques may operate in the 902-928 MHz, 2400-2483.5 MHz, and 5725-5850 MHz bands. The minimum 6 dB bandwidth shall be at least 500 kHz.*

5.2.4. Test condition and measurement test set-up

Signal ink to test system (if used):	☐ air link	☐ cable connection	☒ none
EUT-grounding	☒ none	☐ with power supply	☐ additional connection
Equipment set up	☒ table top		☐ floor standing
Climatic conditions	Temperature: (22±3°C)		Rel. humidity: (40±20)%
General measurement procedures	Please see chapter "Test system set-up for conducted RF-measurement at antenna Port" (W2 Set-up)		

5.2.5. EUT Settings:

The EUT was instructed to transmit with maximum power (if adjustable) according applicants declared and applicable settings.

5.2.6. Measurement method:

Three carrier frequencies (low/middle/high) were used for showing the compliance with this requirement. A delta Marker method was set to measure the bandwidth compared to the highest In-Band power. The operating modes have been varied (e.g. data rate, modulation scheme, etc.). If applicable the hopping-mode is switched off.

Also the **99% emission bandwidth** was measured. Two markers are placed on frequency points such that left to lower f-marker and right to higher f-marker only 1% of the TX-power is contained. Between the markers, 99% of the power is laying. The RBW value is readjusted and the measurement repeated until the RBW/EBW ratio is around 1%.

5.2.7. Spectrum-Analyzer settings:

Span	Set as to fully display the emissions + 30%
Resolution Bandwidth (RBW)	☒ KDB558074 D01 v04
Video Bandwidth (VBW)	Minimum 3 times the resolution bandwidth
Sweep time	Auto -coupled
Detector	Peak detector
Sweep mode	Repetitive Mode, MAX-HOLD, trace stabilization

5.2.8. Results:

For graphical results pls. see annex 1 to this test report.

6dB BANDWIDTH:

Set-up no.: 2 Op. Mode: 1	**6dB BANDWIDTH [MHz]**		
T_{NOM} =21°C V_{NOM}	Low channel = 11 (2405 MHz)	Middle channel = 18 (2440 MHz)	High channel = 26 (2480 MHz)
Measured value	1.5584	1.6233	1.6233

Remark: For graphical results pls. see annex 1 to this test report.

99% OCCUPIED BANDWIDTH:

Set-up no.: 2 Op. Mode: 1	**99% Bandwidth [MHz]**		
T_{NOM} = 21°C V_{NOM}	Low channel = 11 (2405 MHz)	Middle channel = 18 (2440 MHz)	High channel = 26 (2480 MHz)
Measured value	2.2756	2.3124	2.3642

Remark: For graphical results pls. see annex 1 to this test report.

VERDICT: DTS system requirements for 6dB-bandwidth according §15.247 (BW > 500kHz) passed

5.3. Maximum peak conducted output power

5.3.1. Test location and equipment (for reference numbers please see chapter 'List of test equipment')

test location	☒ CETECOM Essen (Chapter. 2.2.1)		☐ 443 System CTC-FAR-EMI-		☐ Please see Chapter. 2.2.3	
test site	☐ 441 EMI SAR	☐ 487 SAR NSA	☒ 347 Radio.lab.		☐	☐
receiver	☐ 377 ESCS30	☐ 001 ESS	☐ 489 ESU 40	☐	☐	☐
spectr. analys.	☐ 584 FSU	☐ 120 FSEM	☐ 264 FSEK	☐ 489 ESU 40	☒ 683 FSU26	☐
antenna	☐ 574 BTA-L	☐ 133 EMCO3115	☐ 302 BBHA9170	☐ 289 CBL 6141	☐ 030 HFH-Z2	☐ 477 GPS
signaling	☐ 392 MT8820A	☐ 436 CMU	☐ 547 CMU			
otherwise	☒ 266 NRV-Z31	☒ 600 NRVD	☐ 110 USB LWL	☐ 482 Filter Matrix	☐ 378 RadiSense	☐ 693 TS8997
DC power	☐ 456 EA 3013A	☒ 463 HP3245A	☐ 459 EA 2032-50	☐ 268 EA- 3050	☐ 494 AG6632A	☐ 498 NGPE 40
otherwise	☐ 331 HC 4055	☐ 248 6 dB Attenuator	☐ 529 Power divider	☒ - cable OTA20		
	☒ 513 20dB Attenuator		☐ K 4 Cable kit			
line voltage	☐ 230 V 50 Hz via public mains		☒ 060 120 V 60 Hz via PAS 5000 and AE1			

5.3.2. Reference

FCC	☒ §15.247(b) (3) + KDB 558074 D01 DTS Meas Guidance v04
ISED	☐ RSS-247, Chapter 5.4(4)
ANSI	☒ ANSI 63.10:2013
Specification	*For systems using digital modulation in the 902-928 MHz, 2400-2483.5 MHz, and 5725-5850 MHz bands: 1 Watt. As an alternative to a peak power measurement, compliance with the one Watt limit can be based on a measurement of the maximum conducted output power. Maximum Conducted Output Power is defined as the total transmit power delivered to all antennas and antenna elements averaged across all symbols in the signalling alphabet when the transmitter is operating at its maximum power control level. Power must be summed across all antennas and antenna elements. The average must not include any time intervals during which the transmitter is off or is transmitting at a reduced power level. If multiple modes of operation are possible (e.g., alternative modulation methods), the maximum conducted output power is the highest total transmit power occurring in any mode.*

5.3.3. EUT settings:

The EUT was instructed to send with maximum power (if adjustable) according applicants instructions.

5.3.4. Test condition and measurement test set-up

Signal link to test system (if used):	☐ air link	☐ cable connection	☒ none
EUT-grounding	☒ none	☐ with power supply	☐ additional connection
Equipment set up	☒ table top 1.5m height		☐ floor standing
Climatic conditions	Temperature: (22±3°C)		Rel. humidity: (40±20)%
General measurement procedures	Please see chapter "Test system set-up for conducted RF-measurement at antenna Port" (W1 Set-up)		

5.3.5. Measurement method and analyzer settings:

The measurement was performed in non-hopping transmission mode with the carrier set to lowest/middle and highest channel. The power was also checked for different data rates, modulation scheme or packet types if applicable.

MEASUREMENT METHOD/ SPECTRUM-ANALYZER SETTINGS:

Measurement Method [1.)]	§15.247(b) (3) Maximum Peak	1.) ☐ PK1-Method (§11.9.1): RBW > 6dB-bandwidth of the signal, ANSI 63.10: 2013, chapter 11.9.1.1 2.) ☐ PK2-Method (§5.2.1.2): Channel integration method (ANSI 63.10:2013) 3.) ☒ PK1-Method (§9.1.2 KDB): Peak Power Meter Method [remark 1.)]
	§15.247(b) (3) Maximum Average	4.) ☐ AVG1 - power averaging over EBW + integrated band power measurement 5.) ☐ AVG2 - trace averaging over EBW + integrated band power measurement 6.) ☐ RMS power meter method
	MIMO	7.) ☐ Method as described in Chapter 3.8 was used for measurements on two available RF-Antenna ports.
Center Frequency		Nominal channel frequency
Span		30% higher then the EBW measured before
Resolution Bandwidth (RBW)		1MHz

Video Bandwidth (VBW)	3MHz
Sweep time	coupled
Detector	Peak, Max hold mode for method PK1/PK2 or RMS and trace average for method AVG1/AVG2
Sweep Mode	Repetitive mode, allow trace to stabilize
Analyzer-Mode	☐ normal ☐ activated channel integration method with limits set to the EBW of the signal

Remark 1: guidance 558074 D01 measurement DTS guidance v04 + KDB 662911 D01, v02r01

5.3.6. RESULTS

APPLICANT'S DECLARED ANTENNA CHARACTERISTICS:

☒ Directional Gain < 6 dBi (measured: difference between measured conducted and radiated eirp. power)
☐ Directional Gain > 6 dBi (measured / applicant's declaration) -> conducted power reduction necessary

- Maximum declared antenna gain [isotropic]: 2 dBi for operating band 2.4GHz

Max. Peak power (conducted) [dBm]			
Set-up no: 2 (check!) Op-Mode: 1 (check!)	Low channel = 11 (2405 MHz)	Middle channel = 18 (2440 MHz)	High channel = 26 (2480 MHz)
Measured Level RF-Port 1	1.87	1.8	-6.9
Limit	1 Watt (30dBm) Peak		

Remark:
1.) External Path Loss -> set as either as correction factor in spectrum-analyzer or activated as transducer table
2.) reported values are for each RF-Port individual, no MIMO technology involved according applicants declaration

5.3.6.1. VERDICT: Maximum value of 1.87 dBm Peak -> pass

5.4. RF-Parameter - Power Spectral Density

5.4.1. Test location and equipment (for reference numbers please see chapter 'List of test equipment')

test location	☒ CETECOM Essen (Chapter. 2.2.1)		☐ Please see Chapter. 2.2.2		☐ Please see Chapter. 2.2.3	
test site	☐ 441 EMI SAR	☐ 487 SAR NSA	☐ 337 OATS	☒ 347 Radio.lab.	☐	☐
receiver	☐ 377 ESCS30	☐ 001 ESS	☐ 489 ESU	☒ 683 FSU26	☐	☐
spectr. analys.	☐ 489 ESU	☐ 120 FSEM	☐ 264 FSEK	☐	☐	☐
power supply	☐ 463 HP3245A	☐ 457 EA 3013A	☐ 463	☐ 268 EA- 3050	☐ 494 AG6632A	☐ 498 NGPE 40
otherwise	☒530 10dB Attenuator			☒ cable K4		
line voltage	☐ 230 V 50 Hz via public mains			☒ 060 120 V 60 Hz via PAS 5000 and AE1		

5.4.2. REFERENCES: §15.247(e), RSS-247, Chapter 5.2(2)

(e) *For digitally modulated systems, the power spectral density conducted from the intentional radiator to the antenna shall not be greater than 8 dBm in any 3 kHz band during any time interval of continuous transmission. This power spectral density shall be determined in accordance with the provisions of paragraph (b) of this section. The same method of determining the conducted output power shall be used to determine the power spectral density.*

5.4.3. TEST CONDITION AND MEASUREMENT TEST SET-UP

Signal ink to test system (if used):	☐ air link	☐ cable connection	☒ none
EUT-grounding	☒ none	☐ with power supply	☐ additional connection
Equipment set up	☒ table top		☐ floor standing
Climatic conditions	Temperature: (22±3°C)		Rel. humidity: (40±20)%
General measurement procedures	Please see chapter “Test system set-up for conducted RF-measurement at antenna Port” (W2 Set-up)		

5.4.4. EUT SETTINGS:

The EUT was instructed to send with maximum power (if adjustable) according applicants instructions.

5.4.5. MEASUREMENT METHOD/ SPECTRUM-ANALYZER SETTINGS

Measurement Method	☐ ANSI 63.10:2013	☒ PKPSD-Method; ☐ AVGPSD Method
	☒ guidance 558074 D01 measurement DTS guidance v04	
Center Frequency	Nominal channel frequency	
Span	5..30% higher then the EBW measured before	
Resolution Bandwidth (RBW)	≥ 3 kHz (at least 3 times RBW) - pls. see diagram	
Video Bandwidth (VBW)	> 10 kHz - pls. see diagram	
Sweep time	coupled	
Detector	Peak, Max hold mode for method PKPSD or RMS method AVGPSD	
Sweep Mode	Repetitive mode, allow trace to stabilize (PKPSD) or single (AVGPSD)	
Addition of correction factors	external measuring set-up path-loss	

Remarks:--

5.4.6. RESULTS

Set-up no.: 2 Op. Mode: 1	POWER SPECTRAL DENSITY [dBm/3 kHz]		
	Low channel = 11 (2405 MHz)	Middle channel = 18 (2440 MHz)	High channel = 26 (2480 MHz)
Measured max frequency [MHz]	2405.1	2440.1	2480.1
Measured Level [dBm]	-20.2	-20.3	-29.4
Limit	< 8dBm/3 kHz		

Remark:

1.) see diagrams for details on frequency in separate annex A1

5.4.7. VERDICT: PASSED

5.5. 20 dBc power specification

5.5.1. Test location and equipment (for reference numbers please see chapter 'List of test equipment')

test location	☒ CETECOM Essen (Chapter. 2.2.1)		☒ 443 System CTC-FAR-EMI-		☐ Please see Chapter. 2.2.3	
test site	☐ 441 EMI SAR	☐ 487 SAR NSA	☐ 337 OATS	☒ 347 Radio.lab.	☐	☐
receiver	☐ 377 ESCS30	☐ 001 ESS	☐ 489 ESU	☒ 683 FSU26	☐	☐
spectr. analys.	☐ 489 ESU	☐ 120 FSEM	☐ 264 FSEK	☐	☐	☐
power supply	☒ 463 HP3245A	☐ 457 EA 3013A	☐ 459 EA 2032-50	☐ 268 EA- 3050	☐ 494 AG6632A	☐ 498 NGPE 40
otherwise	☒ 530 10 dB Attenuator			☒ cable K4		

5.5.2. Reference: §15.247, §15.205 / RSS-247, Chapter 5.5

(d) *In any 100 kHz bandwidth outside the frequency band in which the spread spectrum or digitally modulated intentional radiator is operating, the radio frequency power that is produced by the intentional radiator shall be at least 20 dB below that in the 100 kHz bandwidth within the band that contains the highest level of the desired power, based on either an RF conducted or a radiated measurement, provided the transmitter demonstrates compliance with the peak conducted power limits.*

5.5.3. Test condition and measurement test set-up

Signal ink to test system (if used):		☐ air link	☐ cable connection	☒ none
EUT-grounding		☒ none	☐ with power supply	☐ additional connection
Equipment set up		☒ table top 1.5m height		☐ floor standing
Climatic conditions		Temperature: (22±3°C)		Rel. humidity: (40±20)%
Spectrum-Analyzer settings	Scan frequency range:	☐ 1 – 18 GHz ☐ 18 – 25 GHz ☐ 18 – 40 GHz ☒ other: see diagrams		
	Scan-Mode	☒ 6 dB EMI-Receiver Mode ☐ 3 dB Spectrum analyser Mode		
	Detector	Peak and Average		
	RBW/VBW	100kHz/300kHz		
	Mode:	Repetitive-Scan, max-hold		
	Scan step	40kHz		
	Sweep-Time	Coupled – calibrated display if CW signal otherwise adapted to EUT's individual duty-cycle		
General measurement procedures		Please see chapter "Test system set-up for radiated electric field measurements above 1 GHz" for general measurements procedures in anechoic chamber.		

5.5.4. EUT settings

For FHHS-systems hopping mode was switched-off so fixed three different channels could be measured.The EUT was instructed to send with maximum power (if adjustable) according to applicants instructions.

5.5.5. Measurement method

According guidance 558074 D01 measurement DTS guidance V04: the frequency spectrum was investigated for **conducted** spurious emissions values lower than 20dB related to the RF-carrier power value. Three carrier frequencies (low/middle/high channel) were used for showing the compliance with this requirement. First a In-Band Reference level measurement of the carrier was performed. The video bandwidth (VBW) was chosen 10 times the resolution bandwidth (RBW). The frequency scan was up to 10 times the highest channel frequency within the operational mode. The spectrum-analyzer was set to MAX-PEAK Detector, MAX-Hold Mode, trace stabilization mode.

5.5.6. Table of Measurement results:

Op-Mode: 1	**RF-Conducted test: 20 dBc spurious emissions**					
Frequency Range	Low channel =12 (2410 MHz) Level Reference (In-Band) = 3.7 dBm Limit = -16.3 dBm		Middle channel = 26 (2440 MHz) Level Reference (In-Band) =3.7 dBm Limit= -16.3 dBm		High channel = 26 (2480MHz) Level Reference (In-Band)= -5.2 dBm Limit= -25.2 dBm	
	Frequency [MHz]	Value [dBc]	Frequency [MHz]	Value [dBc]	Frequency [MHz]	Value [dBc]
30MHz to 2.8 GHz	--	>30	--	>30	--	>30
2.8 to 18 GHz	--	>30	--	>30	--	>30
18 – 25GHz (radiated)	--	Noise level 3.)	--	Noise level 3.)	--	Noise level 3.)
Band-Edge	--	>20	N/A		--	>20

Remarks:

1.) see diagrams in separate document A1

2.) the limit on the diagrams is 20dB under the reference level measured In-Band for each channel
3.) Band-Edge results can be found in Annex 1

5.5.7. Test result: pass

5.6. General Limit - Radiated field strength emissions below 30 MHz

5.6.1. Test location and equipment

test location	☒ CETECOM Essen (Chapter. 2.2.1)		☐ Please see Chapter. 2.2.2		☐ Please see Chapter. 2.2.3	
test site	☒ 441 EMI SAR	☐ 487 SAR NSA	☐ 347 Radio.lab.		☐	☐
receiver	☐ 377 ESCS30	☒ 001 ESS	☐	☐	☐	☐
spectr. analys.	☐ 584 FSU	☐ 120 FSEM	☐ 264 FSEK	☐	☐	☐
antenna	☐ 574 BTA-L	☐ 133 EMCO3115	☐ 302 BBHA9170	☐ 289 CBL 6141	☐ 030 HFH-Z2	☒ 021 EMCO6502
signalling	☐ 757 CMW500	☐ 371 CBT32	☐ 547 CMU	☐ 594 CMW500		
otherwise	☐ 400 FTC40x15E	☐ 401 FTC40x15E	☐ 110 USB LWL	☐ 482 Filter Matrix	☐ 378 RadiSense	
DC power	☐ 456 EA 3013A	☐ 457 EA 3013A	☐ 459 EA 2032-50	☐ 268 EA- 3050	☐ 494 AG6632A	☐ 498 NGPE 40
line voltage	☐ 230 V 50 Hz via public mains		☐ 060 120 V 60 Hz via PAS 5000			

5.6.2. Requirements

FCC	Part 15, Subpart C, §15.205 & §15.209			
ISED	RSS-Gen: Issue 4: §8.9 Table 5			
ANSI	C63.10-2013			
Frequency [MHz]	Field strength limit [µV/m]	[dBµV/m]	Distance [m]	Remarks
0.009 – 0.490	2400/f (kHz)	67.6 – 20Log(f) (kHz)	300	Correction factor used due to measurement distance of 3 m
0.490 – 1.705	24000/f (kHz)	87.6 – 20Log(f) (kHz)	30	Correction factor used due to measurement distance of 3 m
1.705 – 30	30	29.5	30	Correction factor used due to measurement distance of 3 m

5.6.3. Test condition and test set-up

Signal link to test system (if used):		☐ air link	☐ cable connection	☒ none
EUT-grounding		☒ none	☐ with power supply	☐ additional connection
Equipment set up		☒ table top		☐ floor standing
Climatic conditions		Temperature: (22±3°C)		Rel. humidity: (40±20)%
EMI-Receiver or Analyzer Settings	Scan data	☒ 9 – 150 kHz RBW/VBW = 200 Hz Scan step = 80 Hz ☒ 150 kHz – 30 MHz RBW/VBW = 9 kHz Scan step = 4 kHz ☐ other:		
	Scan-Mode Detector Mode: Sweep-Time	☒ 6 dB EMI-Receiver Mode ☐ 3dB Spectrum analyser Mode Peak (pre-measurement) and Quasi-PK/Average (final if applicable) Repetitive-Scan, max-hold Coupled – calibrated display if continuous signal otherwise adapted to EUT's individual transmission duty-cycle		
General measurement procedures		Please see chapter "Test system set-up radiated magnetic field measurements below 30 MHz"		

5.6.4. Measurement Results

The results are presented below in summary form only. For more information please consult the diagrams included in annex 1.

Table of measurement results:

Carrier Channel Range	Carrier Channel No.	Frequency range	Set-up no.	OP-mode no.	Remark	Used detector PK	AV	QP	Result
Low	11	9 kHz-30 MHz	1	1	Laying position	☒	☐	☐	passed
					Standing position	☒	☐	☐	passed
Middle	18	9 kHz-30 MHz	1	1	Laying position	☒	☐	☐	passed
					Standing position	☒	☐	☐	passed
High	26	9 kHz-30 MHz	1	1	Laying position	☒	☐	☐	passed
					Standing position	☒	☐	☐	passed

5.6.5. Correction factors due to reduced meas. distance (f< 30 MHz)

The used correction factors when the measurement distance is reduced compared to regulatory measurement distance, are calculated according Extrapolation formulas valid for EUT's with maximum dimension of 0.625xLambda. Formula 2+3+4 as presented in ANSI C63.10, Chapter 6.4.4 are used for the calculations of proper extrapolation factors.

Frequency -Range	f [kHz/MHz]	Lambda [m]	Far-Field Point [m]	Distance Limit accord. 15.209 [m]	1st Condition (dmeas< $D_{near-field}$)	2'te Condition (Limit distance bigger $d_{near-field}$)	Distance Correction accord. Formula
kHz	9,00E+03	33333,33	5305,17	300	fullfilled	not fullfilled	-80,00
	1,00E+04	30000,00	4774,65		fullfilled	not fullfilled	-80,00
	2,00E+04	15000,00	2387,33		fullfilled	not fullfilled	-80,00
	3,00E+04	10000,00	1591,55		fullfilled	not fullfilled	-80,00
	4,00E+04	7500,00	1193,66		fullfilled	not fullfilled	-80,00
	5,00E+04	6000,00	954,93		fullfilled	not fullfilled	-80,00
	6,00E+04	5000,00	795,78		fullfilled	not fullfilled	-80,00
	7,00E+04	4285,71	682,09		fullfilled	not fullfilled	-80,00
	8,00E+04	3750,00	596,83		fullfilled	not fullfilled	-80,00
	9,00E+04	3333,33	530,52		fullfilled	not fullfilled	-80,00
	1,00E+05	3000,00	477,47		fullfilled	not fullfilled	-80,00
	1,25E+05	2400,00	381,97		fullfilled	not fullfilled	-80,00
	2,00E+05	1500,00	238,73		fullfilled	fullfilled	-78,02
	3,00E+05	1000,00	159,16		fullfilled	fullfilled	-74,49
	4,00E+05	750,00	119,37		fullfilled	fullfilled	-72,00
	4,90E+05	612,24	97,44		fullfilled	fullfilled	-70,23
	5,00E+05	600,00	95,49	30	fullfilled	not fullfilled	-40,00
	6,00E+05	500,00	79,58		fullfilled	not fullfilled	-40,00
	7,00E+05	428,57	68,21		fullfilled	not fullfilled	-40,00
	8,00E+05	375,00	59,68		fullfilled	not fullfilled	-40,00
	9,00E+05	333,33	53,05		fullfilled	not fullfilled	-40,00
MHz	1,00	300,00	47,75		fullfilled	not fullfilled	-40,00
	1,59	188,50	30,00		fullfilled	not fullfilled	-40,00
	2,00	150,00	23,87		fullfilled	fullfilled	-38,02
	3,00	100,00	15,92		fullfilled	fullfilled	-34,49
	4,00	75,00	11,94		fullfilled	fullfilled	-32,00
	5,00	60,00	9,55		fullfilled	fullfilled	-30,06
	6,00	50,00	7,96		fullfilled	fullfilled	-28,47
	7,00	42,86	6,82		fullfilled	fullfilled	-27,13
	8,00	37,50	5,97		fullfilled	fullfilled	-25,97
	9,00	33,33	5,31		fullfilled	fullfilled	-24,95
	10,00	30,00	4,77		fullfilled	fullfilled	-24,04
	10,60	28,30	4,50		fullfilled	fullfilled	-23,53
	11,00	27,27	4,34		fullfilled	fullfilled	-23,21
	12,00	25,00	3,98		fullfilled	fullfilled	-22,45
	13,56	22,12	3,52		fullfilled	fullfilled	-21,39
	15,00	20,00	3,18		fullfilled	fullfilled	-20,51
	15,92	18,85	3,00		fullfilled	fullfilled	-20,00
	17,00	17,65	2,81		not fullfilled	fullfilled	-20,00
	18,00	16,67	2,65		not fullfilled	fullfilled	-20,00
	20,00	15,00	2,39		not fullfilled	fullfilled	-20,00
	21,00	14,29	2,27		not fullfilled	fullfilled	-20,00
	23,00	13,04	2,08		not fullfilled	fullfilled	-20,00
	25,00	12,00	1,91		not fullfilled	fullfilled	-20,00
	27,00	11,11	1,77		not fullfilled	fullfilled	-20,00
	29,00	10,34	1,65		not fullfilled	fullfilled	-20,00
	30,00	10,00	1,59		not fullfilled	fullfilled	-20,00

5.7. General Limit - Radiated field strength emissions, 30 MHz - 1 GHz

5.7.1. Test location and equipment

test location	☒ CETECOM Essen (Chapter. 2.2.1)		☐ Please see Chapter. 2.2.2		☐ Please see Chapter. 2.2.3	
test site	☒ 441 EMI SAR	☒ 487 SAR NSA				
receiver	☐ 377 ESCS30	☒ 001 ESS	☐ 489 ESU 40	☐ 620 ESU 26		
spectr. analys.	☐ 584 FSU	☐ 120 FSEM	☐ 264 FSEK			
antenna	☒ 574 BTA-L	☐ 133 EMCO3115	☐ 302 BBHA9170	☐ 289 CBL 6141	☐ 030 HFH-Z2	☐ 477 GPS
signalling	☐ 392 MT8820A	☐ 371 CBT32	☐ 547 CMU	☐ 594 CMW		
otherwise	☐ 400 FTC40x15E	☐ 401 FTC40x15E	☐ 110 USB LWL	☒ 482 Filter Matrix		
DC power	☐ 456 EA 3013A	☐ 457 EA 3013A	☐ 459 EA 2032-50	☐ 268 EA- 3050	☐ 494 AG6632A	☐ 498 NGPE
line voltage	☐ 230 V 50 Hz via public mains		☒ 060 120 V 60 Hz via PAS 5000			

5.7.2. Requirements/Limits

FCC		☐ Part 15 Subpart B, §15.109, class B ☒ Part 15 Subpart C, §15.209 @ frequencies defined in §15.205	
ISED		☒ RSS-Gen., Issue 4, Chapter 8.9, Table 4+6 (licence-exempt radio apparatus) ☐ RSS-Gen., Issue 4, Chapter 7.1.2, Table 2 (receiver) ☐ ICES-003, Issue 6, Table 5 (Class B) ☒ RSS-247, Issue 1, Chapter 5	
ANSI		☐ C63.4-2014 ☒ C63.10-2013	
Limit	Frequency [MHz]	Radiated emissions limits, 3 meters	
		QUASI Peak [µV/m]	QUASI-Peak [dBµV/m]
	30 - 88	100	40.0
	88 - 216	150	43.5
	216 - 960	200	46.0
	above 960	500	54.0

5.7.3. Restricted bands of operation (FCC §15.205/ RSS-Gen, Issue 4 Chapter 8.9, Table 4)

MHz	MHz	MHz	GHz
0.090-0.110	16.42-16.423	399.9-410	4.5-5.15
0.495-0.505	16.69475-16.69525	608-614	5.35-5.46
2.1735-2.1905	16.80425-16.80475	960-1240	7.25-7.75
4.125-4.128	25.5-25.67	1300-1427	8.025-8.5
4.20725-4.20775	37.5-38.25	1645.5-1646.5	9.3-9.5
6.215-6.218	73-74.6	1660-1710	10.6-12.7
6.26775-6.26825	74.8-75.2	1718.8-1722.2	13.25-13.4
6.31175-6.31225	108-121.94	2200-2300	14.47-14.5
8.291-8.294	123-138	2310-2390	15.35-16.2
8.362-8.366	149.9-150.05	2483.5-2500	17.7-21.4
8.37625-8.38675	156.52475-156.52525	2690-2900	22.01-23.12
8.41425-8.41475	156.7-156.9	3260-3267	23.6-24.0
12.29-12.293	162.0125-167.17	3332-3339	31.2-31.8
12.51975-12.52025	167.72-173.2	3345.8-3358	36.43-36.5
12.57675-12.57725	240-285	3600-4400	--
13.36-13.41	322-335.4	--	--
Remark: only spurious emissions are allowed within these frequency bands not exceeding the limits per §15.209			

5.7.4. Test condition and measurement test set-up

Signal link to test system (if used):		☐ air link	☐ cable connection	☒ none
EUT-grounding		☒ none	☐ with power supply	☐ additional connection
Equipment set up		☒ table top 0.8m height		☐ floor standing
Climatic conditions		Temperature: (22±3°C)		Rel. humidity: (40±20)%
EMI-Receiver (Analyzer) Settings	Scan frequency range:	☒ 30 – 1000 MHz ☐ other:		
	Scan-Mode	☒ 6 dB EMI-Receiver Mode ☐ 3 dB spectrum analyser mode		
	Detector	Peak / Quasi-peak		
	RBW/VBW	100 kHz/300 kHz		
	Mode:	Repetitive-Scan, max-hold		
	Scan step	80 kHz		
	Sweep-Time	Coupled – calibrated display if continuous tx-signal otherwise adapted to EUT's individual duty-cycle		
General measurement procedures		Please see chapter "Test system set-up for electric field measurement in the range 30 MHz to 1 GHz"		

5.7.5. MEASUREMENT RESULTS

The results are presented below in summary form only. For more information please consult the diagrams included in annex 1.

Table of measurement results:

Carrier Channel		Frequency range	Set-up no.	OP-mode no.	Remark	Used detector			Result
Range	No.					PK	AV	QP	
Low	11	9 kHz-30 MHz	1	1	Laying position	☒	☐	☐	passed
					Standing position	☒	☐	☐	passed
Middle	18	9 kHz-30 MHz	1	1	Laying position	☒	☐	☐	passed
					Standing position	☒	☐	☐	passed
High	26	9 kHz-30 MHz	1	1	Laying position	☒	☐	☐	passed
					Standing position	☒	☐	☐	passed

5.8. General Limit – Radiated field strength emissions, above 1 GHz

5.8.1. Test equipment FAR1, up to 18 GHz, 3 m

test site	☐441 EMI SAR	☐348 EMI cond.	☒443 EMI FAR	☐ 347 Radio.lab.	☐337 OATS	☐
spectr. analys.	☐584 FSU	☐120 FSEM	☐264 FSEK	☒ 489 ESU 40	☐	☐
antenna meas	☐574 BTA-L	☐289 CBL 6141	☐608 HL 562	☒ 549 HL025	☒302 BBHA9170	☐ 477 GPS
antenna meas	☐123 HUF-Z2	☐132 HUF-Z3	☐030 HFH-Z2	☐ 376 BBHA9120E		☐
Antenna meas	☐071 HUF-Z2	☐020 EMCO3115	☐063 LP 3146	☒ 303 BBHA9170	☐	☐
multimeter	☐341 Fluke 112	☐	☐	☐	☐	☐
signalling	☐392 MT8820A	☐371 CBT32	☐547 CMU	☐ 594 CMW		
DC power	☐086 LNG50-10	☐087 EA3013	☐354 NGPE 40	☐ 349 car battery	☐350 Car battery	☐
line voltage	☐ 230 V 50 Hz via public mains		☒ 060 120 V 60 Hz via PAS 5000			

5.8.2. Test equipment FAR2/OTA1, 18 GHz – 25 GHz, 1m

Measurement in FAR 2 with the distance between the EUT and the antenna 1 m			
714	Spectrum Analyzer	R&S FSU67	104023
087	Power supply	EA 3013 S	-
302	Antenna	BBHA9170	155
688	RF Amplifier	Miteq JS-18004000-40-8P	1750117

5.8.3. Requirements/Limits

FCC	☐ Part 15 Subpart B, §15.109 class B ☒ Part 15 Subpart C, §15.209 for frequencies defined in §15.205 ☐ Part 15 Subpart C, §15.407(b)(1)(2)(3)(4)			
ISED	☒ RSS-Gen., Issue 4, Chapter 8.9, Table 4+6 (transmitter licence excempt) ☒ RSS-Gen., Issue 4, Chapter 8.9, Table 2 (receiver) ☐ ICES-003, Issue 6, Chapter 6.2.2, Table 7 (class B) ☐ RSS-247, Issue 2, Chapter 6			
ANSI	☐ C63.4-2014 ☒ C63.10-2013			
Frequency [MHz]	Limits			
	AV [µV/m]	AV [dBµV/m]	Peak [µV/m]	Peak [dBµV/m]
above 1 GHz for frequencies as defined in §15.205 or RSS-Gen., Issue 4, §8.10 - Table 6	500	54.0	5000	74.0

5.8.4. Test condition and measurement test set-up

Signal link to test system (if used):		☐ air link	☐ cable connection	☒ none
EUT-grounding		☒ none	☐ with power supply	☐ additional connection
Equipment set up		☒ table top 1.5m height		☐ floor standing
Climatic conditions		Temperature: (22±3°C)		Rel. humidity: (40±20)%
Spectrum-Analyzer settings	Scan frequency range:	☒ 1 – 18 GHz ☒ 18 – 25 GHz ☐ 18 – 40 GHz ☐ other:		
	Scan-Mode	☒ 6 dB EMI-Receiver Mode ☐ 3 dB Spectrum analyser Mode		
	Detector	Peak and Average		
	RBW/VBW	1 MHz / 3 MHz		
	Mode:	Repetitive-Scan, max-hold		
	Scan step	400 kHz		
	Sweep-Time	Coupled – calibrated display if CW signal otherwise adapted to EUT's individual duty-cycle		
General measurement procedures		Please see chapter "Test system set-up for radiated electric field measurements above 1 GHz"		

5.8.5. Measurement Results

The results are presented below in summary form only. For more information please consult the diagrams included in annex 1.

Carrier Channel		Frequency range	Set-up no.	OP-mode no.	Remark	Used detector			Result
Range	No.					PK	AV	QP	
Low	11	1-18GHz	1	1	Battery 3.6 V supply	☒	☒	☐	passed
Low	11	18-25GHz	1	1	Battery 3.6 V supply	☒	☒	☐	passed
Middle	18	1-18GHz	1	1	Battery 3.6 V supply	☒	☒	☐	passed
Middle	18	18-25GHz	1	1	Battery 3.6 V supply	☒	☒	☐	passed
High	26	1-18GHz	1	1	Battery 3.6 V supply	☒	☒	☐	passed
High	26	18-25GHz	1	1	Battery 3.6 V supply	☒	☒	☐	passed

5.9. Measurement uncertainties

The reported uncertainties are calculated based on the standard uncertainty multiplied with the appropriate coverage factor **k**, such that a confidence level of approximately 95% is achieved.
For uncertainty determination, each component used in the concrete measurement set-up was taken in account and it's contribution to the overall uncertainty according it's statistical distribution calculated.

Following table shows expectable uncertainties for each measurement type performed.

RF-Measurement	Reference	Frequency range	Calculated uncertainty based on a confidence level of 95%						Remarks
Conducted emissions (U_{CISPR})	CISPR 16-2-1	9 kHz - 150 kHz 150 kHz - 30 MHz	4.0 dB 3.6 dB						-
Radiated emissions Enclosure	CISPR 16-2-3	30 MHz - 1 GHz 1 GHz - 18 GHz	4.2 dB 5.1 dB						E-Field
Disturbance power	CISPR 16-2-2	30 MHz - 300 MHz	-						-
Power Output radiated	-	30 MHz - 4 GHz	3.17 dB						Substitution method
Power Output conducted	-	Set-up No.	Cel-C1	Cel-C2	BT1	W1	W2	--	
		9 kHz - 12.75 GHz	N/A	0.60	0.7	0.25	N/A	--	-
		12.75 - 26.5GHz	N/A	0.82	--	N/A	N/A	--	
Conducted emissions on RF-port	-	9 kHz - 2.8 GHz	0.70	N/A	0.70	N/A	0.69	--	N/A - not applicable
		2.8 GHz - 12.75GHz	1.48	N/A	1.51	N/A	1.43	--	
		12.75 GHz - 18GHz	1.81	N/A	1.83	N/A	1.77	--	
		18 GHz - 26.5GHz	1.83	N/A	1.85	N/A	1.79	--	
Power density	-	1 – 2.8GHz	1.40 dB						--
Occupied bandwidth	-	9 kHz - 4 GHz	0.1272 ppm (Delta Marker)						Frequency error
			1.0 dB						Power
Emission bandwidth	-	9 kHz - 4 GHz	0.1272 ppm (Delta Marker)						Frequency error
	-		See above: 0.70 dB						Power
Frequency stability	-	9 kHz - 20 GHz	0.0636 ppm						-
Radiated emissions Enclosure	-	150 kHz - 30 MHz 30 MHz - 1 GHz 1 GHz - 20 GHz	5.0 dB 4.2 dB 3.17 dB						Magnetic field E-field Substitution

Table: measurement uncertainties, valid for conducted/radiated measurements

6. Abbreviations used in this report

The abbreviations	
ANSI	American National Standards Institute
AV , AVG, CAV	Average detector
EIRP	Equivalent isotropically radiated power, determined within a separate measurement
EGPRS	Enhanced General Packet Radio Service
EUT	Equipment Under Test
FCC	Federal Communications Commission, USA
IC	Industry Canada
n.a.	not applicable
Op-Mode	Operating mode of the equipment
PK	Peak
RBW	resolution bandwidth
RF	Radio frequency
RSS	Radio Standards Specification, Dokuments from Industry Canada
Rx	Receiver
TCH	Traffic channel
Tx	Transmitter
QP	Quasi peak detector
VBW	Video bandwidth
ERP	Effective radiated power

7. Accreditation details of CETECOM's laboratories and test sites

Ref.-No.	Accreditation Certificate	Valid for laboratory area or test site	Accreditation Body
-	D-PL-12047-01-01	All laboratories and test sites of CETECOM GmbH, Essen	DAkkS, Deutsche Akkreditierungsstelle GmbH
337 487 558 348 348	(MRA US-EU 0003)	Radiated Measurements 30 MHz to 1 GHz, 3 m / 10 m (OATS) Radiated Measurements 30 MHz to 1 GHz, 3 m (SAR) Radiated Measurements above 1 GHz, 3 m (FAR) Mains Ports Conducted Interference Measurements Telecommunication Ports Conducted Interference Measurem.	FCC, Federal Communications Commission Laboratory Division, USA
337 487 550 558	-- 3462D-2 3462D-2 3462D-3	Radiated Measurements 30 MHz to 1 GHz, 3 m / 10 m (OATS) Radiated Measurements 30 MHz to 1 GHz, 3 m (SAR) Radiated Measurements 1 GHz to 6 GHz, 3 m (SAR) Radiated Measurements above 1 GHz, 3 m (FAR)	ISED, Industry Canada Certification and Engineering Bureau
487 550 348 348	R- 4452 G- 20013 C- 20009 T- 20006	Radiated Measurements 30 MHz to 1 GHz, 3 m (SAR) Radiated Measurements 1 GHz to 6 GHz, 3 m (SAR) Mains Ports Conducted Interference Measurements Telecommunication Ports Conducted Interference Measurem.	VCCI, Voluntary Control Council for Interference by Information Technology Equipment, Japan
OATS = Open Area Test Site, SAR = Semi Anechoic Room, FAR = Fully Anechoic Room			

8. Instruments and Ancillary

8.1. Used equiment "CTC"

The "Ref.-No" in the left column of the following tables allows the clear identification of the laboratory equipment.

8.1.1. Test software and firmware of equipment

Ref.-No.	Equipment	Type	Serial-No.	Version of Firmware or Software during the test
001	EMI Test Receiver	ESS	825132/017	Firm.= 1.21 , OTP=2.0, GRA=2.0
012	Signal Generator (EMS-cond.)	SMY 01	839069/027	Firm.= V 2.02
013	Power Meter (EMS cond.)	NRVD	839111/003	Firm.= V 1.51
017	Digital Radiocommunication Tester	CMD 60 M	844365/014	Firmware = V 3.52 .22.01.99, DECT = D2.87 13.01.99
053	Audio Analyzer	UPA3	860612/022	Firm. V 4.3
119	RT Harmonics Analyzer dig. Flickermeter	B10	G60547	Firm.= V 3.1DHG
140	Signal Generator	SMHU	831314/006	Firm.= 3.21
261	Thermal Power Sensor	NRV-Z55	825083/0008	EPROM-Datum 02.12.04, SE EE 1 B
262	Power Meter	NRV-S	825770/0010	Firm.= 2.6
263	Signal Generator	SMP 04	826190/0007	Firm.=3.21
295	Racal Digital Radio Test Set	6103	1572	UNIT Firmware= 4.04, SW-Main=4.04, SW-BBP=1.04, SW-DSP=1.02, Hardboot=1.02, Softboot=2.02
298	Univ. Radio Communication Tester	CMU 200	832221/091	R&S Test Firmware =3.53 /3.54 (current Testsoftw. f. all band used
323	Digital Radiocommunication Tester	CMD 55	825878/0034	Firm.= 3.52 .22.01.99
335	CTC-EMS-Conducted	System EMS Conducted	-	EMC 32 V 8.52
340	Digital Radiocommunication Tester	CMD 55	849709/037	Firm.= 3.52 .22.01.99
355	Power Meter	URV 5	891310/027	Firm.= 1.31
365	10V Insertion Unit 50 Ohm	URV5-Z2	100880	Eprom Data = 31.03.08
366	Ultra Compact Simulator	UCS 500 M4	V0531100594	Firm. UCS 500=001925/3.06a02, rc=ISMIEC 4.10
371	Bluetooth Tester	CBT32	100153	CBT V5,30+ SW-Option K55, K57
377	EMI Test Receiver	ESCS 30	100160	Firm.= 2.30, OTP= 02.01, GRA= 02.36
378	Broadband RF Field Monitor	RadiSense III	03D00013SNO-08	Firm.= V.03D13
389	Digital Multimeter	Keithley 2000	0583926	Firm. = A13 (Mainboard) A02 (Display)
392	Radio Communication Tester	MT8820A	6K00000788	Firm.= 4.50 #005, IPL=4.01#001,OS=4.02#001, GSM=4.41#013, W-CDMA= 4.54#004, scenario= 4.52#002
436	Univ. Radio Communication Tester	CMU 200	103083	R&S Test Firmware Base=5.14, Mess-Software= GSM:5.14 WCDMA:5.14 (current Testsoftw. F. all band
441	CTC-SAR-EMI Cable Loss	System EMI field (SAR)	-	EMC 32 Version 8.52
442	CTC-SAR-EMS	System EMS field (SAR)	-	EMC 32 Version 8.40
443	CTC-FAR-EMI-RSE	System CTC-FAR-EMI-RSE	-	Spuri 7.2.5 or EMC 32 Ver. 9.15.00
444	CTC-FAR-EMS field	System-EMS-Field (FAR)	-	EMC 32 Version 9.15.00
460	Univ. Radio Communication Tester	CMU 200	108901	R&S Test Firmware Base=5.14, GSM=5.14 WCDMA=5.14 (current Testsoftw.,f. all band to be used,
489	EMI Test Receiver	ESU40	1000-30	Firmware=4.43 SP3, Bios=V5.1-16-3, Spec. =01.00
491	ESD Simulator dito	ESD dito	dito307022	V 2.30
524	Voltage Drop Simulator	VDS 200	0196-16	Software Nr: 000037 Version V4.20a01
526	Burst Generator	EFT 200 A	0496-06	Software Nr. 000034 Version V2.32
527	Micro Pulse Generator	MPG 200 B	0496-05	Software-Nr. 000030 Version V2.43
528	Load Dump Simulator	LD 200B	0496-06	Software-Nr. 000031 Version V2.35a01
546	Univ. Radio Communication Tester	CMU 200	106436	R&S Test Firmware Base=5.14, GSM=5.14 WCDMA=5.14 (current Testsoftw.,f. all band to be used
547	Univ. Radio Communication Tester	CMU 200	835390/014	R&S Test Firmware Base=V5.1403 (current Testsoftw., f. all band used, GSM = 5.14 WCDMA: = 5.14
584	Spectrum Analyzer	FSU 8	100248	2.82_SP3
597	Univ. Radio Communication Tester	CMU 200	100347	R&S Test Firmware Base=5.01, GSM=5.02 WCDMA= not installed, Mainboard= µP1=V.850
598	Spectrum Analyzer	FSEM 30	831259/013	Firmware Bios 3.40 , Analyzer 3.40 Sp 2
607	Signal Generator	SMR 20	832033/011	V1.25
620	EMI Test Receiver	ESU 26	100362	4.43_SP3
642	Wideband Radio Communication Tester	CMW 500	126089	Setup V03.26, Test programm component V03.02.20
670	Univ. Radio Communication Tester	CMU 200	106833	µP1 =V8.50, Firmware = V.20
689	Vector Signal Generator	SMU200	100970	02.20.360.142
692	Bluetooth Tester	CBT 32	100236	CBT V 5.40, FW: V.2.41 (FPGA Digital, V. 3.09 FPGA RF)

8.1.2. Single instruments and test systems

Ref.-No.	Equipment	Type	Serial-No.	Manufacturer	Interval of calibration	Remark	Cal due
001	EMI Test Receiver	ESS	825132/017	Rohde & Schwarz	12 M	-	16.05.2018
005	AC - LISN (50 Ohm/50µH, test site 1)	ESH2-Z5	861741/005	Rohde & Schwarz	12 M	-	15.05.2018
007	Single-Line V-Network (50 Ohm/5µH)	ESH3-Z6	892563/002	Rohde & Schwarz	12 M	-	17.05.2018
009	Power Meter (EMS-radiated)	NRV	863056/017	Rohde & Schwarz	24 M	-	15.05.2019
016	Line Impedance Simulating Network	Op. 24-D	B6366	Spitzenberger+Spies	36 M	-	30.05.2019
021	Loop Antenna (H-Field)	6502	9206-2770	EMCO	36 M	-	30.04.2018
030	Loop Antenna (H-field)	HFH-Z2	879604/026	Rohde & Schwarz	36 M	-	30.04.2018
033	RF-current probe (100kHz-30MHz)	ESH2-Z1	879581/18	Rohde & Schwarz	24 M	-	15.05.2019
057	relay-switch-unit (EMS system)	RSU	494440/002	Rohde & Schwarz	pre-m	1a	
060	power amplifier (DC-2kHz)	PAS 5000	B6363	Spitzenberger+Spies	-	3	
086	DC - power supply, 0 -10 A	LNG 50-10	-	Heinzinger Electronic	pre-m	2	
087	DC - power supply, 0 -5 A	EA-3013 S	-	Elektro Automatik	pre-m	2	
091	USB-LWL-Converter	OLS-1	007/2006	Ing. Büro Scheiba	-	4	
099	passive voltage probe	ESH2-Z3	299.7810.52	Rohde & Schwarz	36 M	-	30.04.2018
100	passive voltage probe	Probe TK 9416	without	Schwarzbeck	36 M	-	30.04.2018
110	USB-LWL-Converter	OLS-1	-	Ing. Büro Scheiba	-	4	
119	RT Harmonics Analyzer dig. Flickermeter	B10	G60547	BOCONSULT	36 M	-	30.05.2019
133	horn antenna 18 GHz (Meas 1)	3115	9012-3629	EMCO	36 M	1c	10.03.2020
134	horn antenna 18 GHz (Subst 2)	3115	9005-3414	EMCO	36 M	-	10.03.2020
136	adjustable dipole antenna (Dipole 1)	3121C-DB4	9105-0697	EMCO	36 M	-	30.04.2018
140	Signal Generator	SMHU	831314/006	Rohde & Schwarz	24 M	-	30.05.2018
248	attenuator	SMA 6dB 2W	-	Radiall	pre-m	2	
249	attenuator	SMA 10dB 10W	-	Radiall	pre-m	2	
252	attenuator	N 6dB 12W	-	Radiall	pre-m	2	
256	attenuator	SMA 3dB 2W	-	Radiall	pre-m	2	
257	hybrid	4031C	04491	Narda	pre-m	2	
260	hybrid coupler	4032C	11342	Narda	pre-m	2	
261	Thermal Power Sensor	NRV-Z55	825083/0008	Rohde & Schwarz	24 M	-	30.05.2018
262	Power Meter	NRV-S	825770/0010	Rohde & Schwarz	24 M	-	30.05.2018
263	Signal Generator	SMP 04	826190/0007	Rohde & Schwarz	36 M	-	30.05.2019
265	peak power sensor	NRV-Z33, Model 04	840414/009	Rohde & Schwarz	24 M	-	30.05.2018
266	Peak Power Sensor	NRV-Z31, Model 04	843383/016	Rohde & Schwarz	24 M	-	30.05.2018
267	notch filter GSM 850	WRCA 800/960-6EEK	9	Wainwright GmbH	pre-m	2	
270	termination	1418 N	BB6935	Weinschel	pre-m	2	
271	termination	1418 N	BE6384	Weinschel	pre-m	2	
272	attenuator (20 dB) 50 W	Model 47	BF6239	Weinschel	pre-m	2	
273	attenuator (10 dB) 100 W	Model 48	BF9229	Weinschel	pre-m	2	
274	attenuator (10 dB) 50 W	Model 47 (10 dB) 50 W	BG0321	Weinschel	pre-m	2	
275	DC-Band	Model 7003 (N)	C5129	Weinschel	pre-m	2	
276	DC-Band	Model 7006 (SMA)	C7061	Weinschel	pre-m	2	
279	power divider	1515 (SMA)	LH855	Weinschel	pre-m	2	
298	Univ. Radio Communication Tester	CMU 200	832221/091	Rohde & Schwarz	pre-m	3	
300	AC LISN (50 Ohm/50µH, 1-phase)	ESH3-Z5	892 239/020	Rohde & Schwarz	12 M	-	17.05.2018
301	attenuator (20 dB) 50W, 18GHz	47-20-33	AW0272	Lucas Weinschel	pre-m	2	
302	horn antenna 40 GHz (Meas 1)	BBHA9170	155	Schwarzbeck	36 M	-	14.03.2020
303	horn antenna 40 GHz (Subst 1)	BBHA9170	156	Schwarzbeck	36 M	-	20.03.2020
331	Climatic Test Chamber -40/+180 Grad	HC 4055	43146	Heraeus Vötsch	24 M	-	30.10.2018
341	Digital Multimeter	Fluke 112	81650455	Fluke	24 M	-	30.05.2018
342	Digital Multimeter	Voltcraft M-4660A	IB 255466	Voltcraft	24 M	-	17.05.2019
347	laboratory site	radio lab.	-	-	-	5	
348	laboratory site	EMI conducted	-	-	-	5	
354	DC - Power Supply 40A	NGPE 40/40	448	Rohde & Schwarz	pre-m	2	
355	Power Meter	URV 5	891310/027	Rohde & Schwarz	24 M	-	30.05.2018
357	power sensor	NRV-Z1	861761/002	Rohde & Schwarz	24 M	-	24.05.2019
371	Bluetooth Tester	CBT32	100153	R&S	36 M	-	30.05.2019
373	Single-Line V-Network (50 Ohm/5µH)	ESH3-Z6	100535	Rohde & Schwarz	12 M	-	17.05.2018
377	EMI Test Receiver	ESCS 30	100160	Rohde & Schwarz	12 M	-	15.05.2018
392	Radio Communication Tester	MT8820A	6K00000788	Anritsu	12 M	-	18.05.2018
405	Thermo-/Hygrometer	OPUS 10 THI	126.0604.0003.3.3.3.2 2	LUFFT Mess u. Regeltechnik	24 M	-	30.03.2019
431	Model 7405	Near-Field Probe Set	9305-2457	EMCO	-	4	
436	Univ. Radio Communication Tester	CMU 200	103083	Rohde & Schwarz	12 M	-	24.05.2018
439	UltraLog-Antenna	HL 562	100248	Rohde & Schwarz	36 M	-	10.03.2020
454	Oscilloscope	HM 205-3	9210 P 29661	Hameg	-	4	
456	DC-Power supply 0-5 A	EA 3013 S	207810	Elektro Automatik	pre-m	2	
459	DC -Power supply 0-5 A , 0-32 V	EA-PS 2032-50	910722	Elektro Automatik	pre-m	2	
460	Univ. Radio Communication Tester	CMU 200	108901	Rohde & Schwarz	12 M	-	16.06.2018
463	Universal source	HP3245A	2831A03472	Agilent	-	4	
466	Digital Multimeter	Fluke 112	89210157	Fluke USA	24 M	-	30.05.2018

Ref.-No.	Equipment	Type	Serial-No.	Manufacturer	Interval of calibration	Remark	Cal due
467	Digital Multimeter	Fluke 112	89680306	Fluke USA	36 M	-	30.04.2018
468	Digital Multimeter	Fluke 112	90090455	Fluke USA	36 M	-	30.04.2018
477	ReRadiating GPS-System	AS-47	-	Automotive Cons. Fink	-	3	
480	power meter (Fula)	NRVS	838392/031	Rohde & Schwarz	24 M	-	16.05.2019
482	filter matrix	Filter matrix SAR 1	-	CETECOM (Brl)	-	1d	
487	System CTC NSA-Verification SAR-EMI	System EMI field (SAR) NSA	-	ETS Lindgren / CETECOM	24 M	-	31.03.2019
489	EMI Test Receiver	ESU40	1000-30	Rohde & Schwarz	12 M	-	18.05.2019
502	band reject filter	WRCG 1709/1786-1699/1796-	SN 9	Wainwright	pre-m	2	
503	band reject filter	WRCG 824/849-814/859-	SN 5	Wainwright	pre-m	2	
517	relais switch matrix	HF Relais Box Keithley	SE 04	Keithley	pre-m	2	
523	Digital Multimeter	L4411A	MY46000154	Agilent	24 M	-	18.05.2019
529	6 dB Broadband resistive power divider	Model 1515	LH 855	Weinschel	pre-m	2	
530	10 dB Broadband resistive power divider	R 416110000	LOT 9828	-	pre-m	2	
546	Univ. Radio Communication Tester	CMU 200	106436	R&S	12 M	-	30.03.2018
547	Univ. Radio Communication Tester	CMU 200	835390/014	Rohde & Schwarz	12 M	-	05.07.2018
549	Log.Per-Antenna	HL025	1000060	Rohde & Schwarz	36/12 M	-	31.07.2018
550	System CTC S-VSWR Verification SAR-EMI	System EMI Field SAR S-VSWR	-	ETS Lindgren/CETECOM	24 M	-	30.03.2019
557	System CTC-OTA-2	R&S TS8991	-	Rohde & Schwarz	12 M	5	30.09.2016
558	System CTC FAR S-VSWR	System CTC FAR S-VSWR	-	CTC	24 M	-	08.08.2019
574	Biconilog Hybrid Antenna	BTA-L	980026L	Frankonia	36/12 M	-	31.03.2019
584	Spectrum Analyzer	FSU 8	100248	Rohde & Schwarz	pre-m	-	
597	Univ. Radio Communication Tester	CMU 200	100347	Rohde & Schwarz	pre-m	-	
600	power meter	NRVD (Reserve)	834501/018	Rohde & Schwarz	24 M	-	17.05.2019
601	medium-sensitivity diode sensor	NRV-Z5 (Reserve)	8435323/003	Rohde & Schwarz	24 M	-	15.05.2019
602	peak power sensor	NRV-Z32 (Reserve)	835080	Rohde & Schwarz	24 M	-	
611	DC power supply	E3632A	KR 75305854	Agilent	pre-m	2	
612	DC power supply	E3632A	MY 40001321	Agilent	pre-m	2	
613	Attenuator	R416120000 20dB 10W	Lot. 9828	Radiall	pre-m	2	
616	Digitalmultimeter	Fluke 177	88900339	Fluke	24 M	-	30.05.2018
617	Power Splitter/Combiner	ZFSC-2-2-S+	S F987001108	Mini Circuits	-	2	
618	Power Splitter/Combiner	50PD-634	600994	JFW Industries USA	-	2	
619	Power Splitter/Combiner	50PD-634	600995	JFW Industries, USA	-	3	
620	EMI Test Receiver	ESU 26	100362	Rohde-Schwarz	12 M	-	16.05.2018
621	Step Attenuator 0-139 dB	RSP	100017	Rohde & Schwarz	pre-m	2	
625	Generic Test Load USB	Generic Test Load USB	-	CETECOM	-	2	
627	data logger	OPUS 1	201.0999.9302.6.4.1.43	G. Lufft GmbH	24 M	-	30.03.2019
634	Spectrum Analyzer	FSM (HF-Unit)	826188/010	Rohde & Schwarz	pre-m	2	
637	High Speed HDMI with Ethernet 1m	HDMI cable with Ethernet 1m	-	KogiLink	-	2	
638	HDMI Kabel with Ethernet 1,5 m flach	HDMI cable with Ethernet	-	Reichelt	-	2	
640	HDMI cable 2m rund	HDMI cable 2m rund	-	Reichelt	-	2	
641	HDMI cable with Ethernet	Certified HDMI cable with	-	PureLink	-	2	
642	Wideband Radio Communication Tester	CMW 500	126089	Rohde&Schwarz	12 M	-	24.05.2018
644	Amplifierer	ZX60-2534M+	SN865701299	Mini-Circuits	-	-	
670	Univ. Radio Communication Tester	CMU 200	106833	Rohde & Schwarz	24 M	-	30.05.2018
671	DC-power supply 0-5 A	EA-3013S	-	Elektro Automatik	pre-m	2	
678	Power Meter	NRP	101638	Rohde&Schwarz	pre-m	-	
683	Spectrum Analyzer	FSU 26	200571	Rohde & Schwarz	12 M	-	17.05.2018
686	Field Analyzer	EHP-200A	160WX30702	Narda Safety Test Solutions	24 M	-	29.03.2019
687	Signal Generator	SMF 100A	102073	Rohde&Schwarz	12 M	-	17.05.2018
688	Pre Amp	JS-18004000-40-8P	1750117	Miteq	pre-m	-	
690	Spectrum Analyzer	FSU	100302/026	Rohde&Schwarz	12 M	-	16.05.2018
691	OSP120 Base Unit	OSP120	101183	Rohde & Schwarz	12 M	-	22.05.2018
692	Bluetooth Tester	CBT 32	100236	Rohde & Schwarz	36 M	-	29.05.2020
697	Power Splitter	ZN4PD-642W-S+	165001445	Mini-Circuits	-	2	
703	INNCO Antennen Mast	MA 4010-KT080-XPET-ZSS3	MA4170-KT100-XPET-	INNCO	pre-m	-	
704	INNCON Controller	CO 3000-4port	CO3000/933/38410516/L	INNCO Systems GmBh	pre-m	-	
711	Harmonic Mixer 90 GHz - 140GHz	RPG FS-Z140	101004	RPG	12 M	-	22.02.2018
712	Harmonic Mixer 75 GHz - 110GHz	FS-Z110	101468	Rohde & Schwarz	12 M	-	22.02.2018
713	Harmonic Mixer, 50 GHz - 75GHz	FS-Z75	101022	Rohde & Schwarz	12 M	-	22.05.2018
714	Signal Analyzer 67GHz	FSW67	104023	Rohde & Schwarz	24 M	-	03.03.2019
715	Harmonic Mixer, 140 GHz - 220GHz	FS-Z220	101009	RPG Radiometer Physics	12 M	-	03.08.2018
716	Harmonic Mixer 220 GHz to 325 GHZ	FS-Z325	101005	RPG Radiometer Physics	12 M	-	13.02.2018
747	Spectrum Analyzer	FSU 26	200152	Rohde & Schwarz	12 M	-	18.05.2018

Ref.-No.	Equipment	Type	Serial-No.	Manufacturer	Interval of calibration	Remark	Cal due
748	Pickett-Potter Horn Antenna	FH-PP 4060	010001	Radiometer Physiscs	-	-	
749	Pickett-potter Horn Antenna	FH-PP 60-90	010003	Radiometer Physics	-	-	
750	Pickett-Potter Horn Antenna	FH-PP 140-220	010011	Radiometer Physics	-	-	
757	CMW500 wide. Radio Comm.	CMW500	158150	Rohde & Schwarz	12 M	-	01.05.2017

8.1.3. Legend

Note / remarks		Calibrated during system calibration:
	1a	System CTC-SAR-EMS (Ref.-No. 442)
	1b	System-CTC-EMS-Conducted (Ref.-No. 335)
	1c	System CTC-FAR-EMI-RSE (Ref.-No . 443)
	1d	System CTC-SAR-EMI (Ref.-No . 441)
	1e	System CTC-OATS (EMI radiated) (Ref.-No. 337)
	1 f	System CTC-CTIA-OTA (Ref.-No . 420)
	1 g	System CTC-FAR-EMS (Ref.-No . 444)
	2	Calibration or equipment check immediately before measurement
	3	Regulatory maintained equipment for functional check or support purpose
	4	Ancillary equipment without calibration e.g. mechanical equipment or monitoring equipment
	5	Test System

Interval of calibration	12 M	12 month
	24 M	24 month
	36 M	36 month
	24/12 M	Calibration every 24 months, between this every 12 months internal validation
	36/12 M	Calibration every 36 months, between this every 12 months internal validation
	Pre-m	Check before starting the measurement
	-	Without calibration

9. Versions of test reports (change history)

Version	Applied changes	Date of release
--	Initial release	2018-05-01
--	--	--
--	--	--