DFS TEST REPORT FOR CERTIFICATION
On Behalf of

BYD Auto Industry Company Limited

In-vehicle Multimedia Host

Model Number: MTED03

FCC ID: SD4-MTED03

Applicant:	BYD Auto Industry Company Limited
Address:	No.3001, 3007, Hengping Road, Pingshan, Shenzhen,
	Guangdong, P.R.China
Prepared By:	EST Technology Co., Ltd.
	Chilingxiang, Qishantou, Santun, Houjie, Dongguan, Guangdong, China
Tel: 86-769-83081888-808	

Report Number:	ESTE-R2603330
Date of Test:	Jan. 20, 2026 to Mar. 17, 2026
Date of Report:	Mar. 27, 2026

TABLE OF CONTENTS

Description Page

TEST REPORT VERIFICATION 3
1. GENERAL INFORMATION 4
1.1. Description of Device (EUT) 4
1.2. The antenna information for EUT 5
1.3. Information of RF Cable 5
2. SUMMARY OF TEST 6
2.1. Summary of test result 6
2.2. Test Facilities 7
2.3. Measurement uncertainty for EST Technology Co., Ltd. 8
2.4. Test Equipment List 8
3. DYNAMIC FREQUENCY SELECTION REQUIREMENTS 9
3.1. DFS Overview 9
3.2. DFS Detection Thresholds 10
3.3. Response Requirements 10
3.4. Radar Test Waveforms 11
3.4.1. Short Pulse Radar Test Waveforms 11
3.4.2. Long Pulse Radar Test Waveform 13
3.4.3. Frequency Hopping Radar Test Waveform 14
4. TEST SETUP 15
4.1. Setup Configuration of EUT and TS8997 System 15
4.2. Radar Waveform Calibration 15
4.3. Channel Loading 16
5. IN-SERVICE MONITORING FOR CHANNEL MOVE TIME, CHANNEL CLOSING TRANSMISSION TIME AND NON-OCCUPANCY PERIOD 17
5.1. Test Procedure 17
5.2. Channel Move Time&Channel Close Transmission Time Test Result 18
5.3. Non-Occupancy Period Test Result 21
6. TEST SETUP PHOTO 22

Applicant: **Address:**	BYD Auto Industry Company Limited No.3001, 3007, Hengping Road, Pingshan, Shenzhen, Guangdong, P.R.China		
Manufacturer: **Address:**	BYD Auto Industry Company Limited No.3001, 3007, Hengping Road, Pingshan, Shenzhen, Guangdong, P.R.China		
E.U.T:	In-vehicle Multimedia Host		
Model Number:	MTED03		
Power Supply:	DC 12V From Battery		
Trade Name:	BYD	Sample No.:	EST-260119019-001
Date of Receipt:	Jan. 20, 2026	Date of Test:	Jan. 20, 2026 to Mar. 17, 2026
Test Specification:	FCC Part 15 Subpart E 15.407 KDB 905462 D02 UNII DFS Compliance Procedures New Rules v02 KDB 905462 D03 UNII Clients Without Radar Detection New Rules v01r02		
Test Result:	The device described above is tested by EST Technology Co., Ltd. The measurement results were contained in this test report and EST Technology Co., Ltd. was assumed full responsibility for the accuracy and completeness of these measurements. Also, this report shows that the EUT to be technically compliance with the Dynamic Frequency Selection (DFS) tests under FCC Rules and Regulations Part 15 Subpart E requirements. This report applies to above tested sample only and shall not be reproduced in part without written approval of EST Technology Co., Ltd. Date: Mar. 27, 2026		

Prepared by:	Reviewed by:	Approved by:
Ring Yang / Assistant	Seven Wang / Engineer	Iceman Hu / Manager

Other Aspects: None.

Abbreviations: OK/P=passed fail/F=failed n.a/N=not applicable E.U.T=equipment under tested

This test report is based on a single evaluation of one sample of above mentioned products. It is not permitted to be duplicated in extracts without written approval of EST Technology Co., Ltd. The statement of compliance in this report is based on the limit in the test standard, the measurement uncertainty is not considered.

1.GENERAL INFORMATION

1.1.Description of Device (EUT)

FCC ID	:	SD4-MTED03
Product Name	:	In-vehicle Multimedia Host
Model Number	:	MTED03
Software Version	:	61.1.1
Hardware Version	:	N/A
Number of channel	:	U-NII-2A(5250 MHz~5350 MHz): IEEE 802.11a / n HT20 / ac VHT20 / ax HE20/be EHT20: 4 Channels; IEEE 802.11n HT40 / ac VHT40 / ax HE40/be EHT40: 2 Channels; IEEE 802.11ac VHT80 / ax HE80/be EHT80: 1 Channel. IEEE 802.11ac VHT160/ax HE160/be EHT160: 1 Channel. U-NII-2C(5470 MHz~5725 MHz): IEEE 802.11a / n HT20 / ac VHT20/ ax HE20/be EHT20: 11 Channels; IEEE 802.11n HT40 / ac VHT40 / ax HE40/be EHT40: 5 Channels; IEEE 802.11ac VHT80 / ax HE80/be EHT80: 2 Channel. IEEE 802.11ac VHT160/ax HE160/be EHT160: 1 Channel.
Modulation	:	OFDM, OFDMA
Channels Spacing	:	IEEE 802.11a: 20MHz; IEEE 802.11n HT20: 20MHz; IEEE 802.11n HT40: 40MHz; IEEE 802.11ac VHT20: 20MHz; IEEE 802.11ac VHT40: 40MHz; IEEE 802.11ac VHT80: 80MHz; IEEE 802.11ac VHT160: 160MHz; IEEE 802.11ax HE20: 20MHz; IEEE 802.11ax HE40: 40MHz; IEEE 802.11ax HE80: 80MHz; IEEE 802.11ax HE160: 160MHz; IEEE 802.11be EHT20: 20MHz; IEEE 802.11be EHT40: 40MHz; IEEE 802.11be EHT80: 80MHz; IEEE 802.11be EHT160: 160MHz
TPC Function	:	☒ Without TPC ☐ With TPC
DFS Mode(s)	:	☐ Master ☐ Slave with radar detection ☒ Slave without radar detection
Sample Type	:	Prototype production
Note: The product information is provided by the manufacturer. The laboratory is not responsible for this data.		

1.2.The antenna information for EUT

Ant No.	Brand	Model Name	Antenna Type	Connector	Gain (dBi)
1	-	-	External	-	2.2

Note:
1.The antenna gain is declared by the customer and the laboratory is not responsible for the accuracy of the antenna gain.
2.The test results of this report only apply to the sample as received.

1.3.Information of RF Cable

Cable Loss(dB)	Provided by
1.0	BYD Auto Industry Company Limited

Note:
1.The customer declared the loss value of the RF Cable. and the test results of this report only apply to the sample as received.
2.The laboratory is not responsible for the accuracy of the cable loss.

2.SUMMARY OF TEST

2.1.Summary of test result

Description of Test Item	Test Mode	FCC Standard Section	Results
Channel Closing Transmission Time	IEEE 802.11a 5260/5500MHz IEEE 802.11n HT40 5270/5510MHz IEEE 802.11ac VHT80 5290MHz IEEE 802.11ax HE80 5290MHz IEEE 802.11be EHT80 5290MHz IEEE 802.11ac VHT160 5570MHz IEEE 802.11ax HE160 5570MHz IEEE 802.11be EHT160 5570MHz	15.407(h)	PASS
Channel Move Time		15.407(h)	PASS
Non-Occupancy Period		15.407(h)	PASS

2.2.Test Facilities

EMC Lab	:	Accredited by CNAS, CHINA Registration No.: L5288 This Accreditation is valid until: November 12, 2029 Recognized by FCC, USA Designation Number: CN1215 This Recognition is valid until: January 31, 2028 Accredited by A2LA, USA Registration No.: 4366.01 This Accreditation is valid until: January 31, 2028 Recognized by Industry Canada CAB identifier No.: CN0035 This Recognition is valid until: January 31, 2028 Recognized by VCCI, Japan Registration No.:C-14103; T-20073; R-13663; R-20103; G-20097 Date of registration: Apr. 20, 2020 This Recognition is valid until: Apr. 19, 2026 Recognized by TUV Rheinland, Germany Registration No.: UA 50413872 0001 Date of registration: July 31, 2018 Recognized by Intertek Registration No.: 2011-RTL-L2-64 Date of registration: November 08, 2018
Name of Firm	:	EST Technology Co., Ltd.
Site Location	:	Chilingxiang, Qishantou, Santun, Houjie, Dongguan, Guangdong, China

2.3.Measurement uncertainty for EST Technology Co., Ltd.

Test Item	Uncertainty
Uncertainty for Conduction emission test	2.54dB
Uncertainty for spurious emissions test (Below 30MHz)	±1.62 dB
Uncertainty for Radiation Emission test (30MHz-1GHz)	3.62
Uncertainty for Radiation Emission test (1GHz to 18GHz)	4.86
Uncertainty for spurious emissions test (18GHz to 40GHz)	4.67
Uncertainty for radio frequency	7×10-8
Uncertainty for conducted RF Power	1.08dB
Uncertainty for Power density test	0.26dB
Temperature	±0.6°C
Humidity	±4.0 %
Volatage DC	±1.0%
Volatage (AC, <10KHz)	±1.5%

Note: This uncertainty represents an expanded uncertainty expressed at approximately the 95% confidence level using a coverage factor of k=2.

2.4.Test Equipment List

Equipment	Manufacturer	Model No.	Serial No.	Calibration Body	Last Cal.	Next Cal.
TS 8997	Rohde &Schwarz	/	/	/	/	/
Open Switch and Control Unit	Rohde &Schwarz	OSP-B157WB	EST-E036	LISAI	June 11,25	June 10,26
Signal and Spectrum Analyzer	Rohde &Schwarz	FSV	EST-E037	LISAI	June 11,25	June 10,26
Signal Generator	Rohde &Schwarz	SMB100A	EST-E038	LISAI	June 11,25	June 10,26
Vector Signal Generator	Rohde &Schwarz	SMBV100A	EST-E039	LISAI	June 11,25	June 10,26
Test Software	Rohde &Schwarz	WMS32	10.50.40	N/A	N/A	N/A
Master AP	LINKSYS	WRT3200ACM	1981060A62 1419	N/A	N/A	N/A
Notebook	DELL	Laititude E6420	N/A	N/A	N/A	N/A

Note: The FCC ID of Master AP is Q87-WRT3200ACM.

3.DYNAMIC FREQUENCY SELECTION REQUIREMENTS

3.1.DFS Overview

Table 1: Applicability of DFS Requirements Prior to Use of a Channel

Requirement	Operational Mode		
	Master	**Client Without Radar Detection**	**Client With Radar Detection**
Non-Occupancy Period	Yes	Not required	Yes
DFS Detection Threshold	Yes	Not required	Yes
Channel Availability Check Time	Yes	Not required	Not required
U-NII Detection Bandwidth	Yes	Not required	Yes

Table 2: Applicability of DFS requirements during normal operation

Requirement	Operational Mode	
	Master Device or Client with Radar Detection	**Client Without Radar Detection**
DFS Detection Threshold	Yes	Not required
Channel Closing Transmission Time	Yes	Yes
Channel Move Time	Yes	Yes
U-NII Detection Bandwidth	Yes	Not required

Additional requirements for devices with multiple bandwidth modes	Master Device or Client with Radar Detection	Client Without Radar Detection
U-NII Detection Bandwidth and Statistical Performance Check	All BW modes must be tested	Not required
Channel Move Time and Channel Closing Transmission Time	Test using widest BW mode available	Test using the widest BW mode available for the link
All other tests	Any single BW mode	Not required
Note: Frequencies selected for statistical performance check (Section 7.8.4) should include several frequencies within the radar detection bandwidth and frequencies near the edge of the radar detection bandwidth. For 802.11 devices it is suggested to select frequencies in each of the bonded 20 MHz channels and the channel center frequency.		

3.2.DFS Detection Thresholds

Table 3: DFS Detection Thresholds for Master Devices and Client Devices with Radar Detection

Maximum Transmit Power	Value (See Notes 1, 2, and 3)
EIRP ≥ 200 milliwatt	-64 dBm
EIRP < 200 milliwatt and power spectral density < 10 dBm/MHz	-62 dBm
EIRP < 200 milliwatt that do not meet the power spectral density requirement	-64 dBm

Note 1: This is the level at the input of the receiver assuming a 0 dBi receive antenna.
Note 2: Throughout these test procedures an additional 1 dB has been added to the amplitude of the test transmission waveforms to account for variations in measurement equipment. This will ensure that the test signal is at or above the detection threshold level to trigger a DFS response.
Note 3: EIRP is based on the highest antenna gain. For MIMO devices refer to KDB Publication 662911 D01.

3.3.Response Requirements

Table 4: DFS Response Requirement Values

Parameter	Value
Non-occupancy period	Minimum 30 minutes
Channel Availability Check Time	60 seconds
Channel Move Time	10 seconds See Note 1.
Channel Closing Transmission Time	200 milliseconds + an aggregate of 60 milliseconds over remaining 10 second period. See Notes 1 and 2.
U-NII Detection Bandwidth	Minimum 100% of the U-NII 99% transmission power bandwidth. See Note 3.

Note 1: *Channel Move Time* and the *Channel Closing Transmission Time* should be performed with Radar Type 0. The measurement timing begins at the end of the Radar Type 0 burst.
Note 2: The *Channel Closing Transmission Time* is comprised of 200 milliseconds starting at the beginning of the *Channel Move Time* plus any additional intermittent control signals required to facilitate a *Channel* move (an aggregate of 60 milliseconds) during the remainder of the 10 second period. The aggregate duration of control signals will not count quiet periods in between transmissions.
Note 3: During the *U-NII Detection Bandwidth* detection test, radar type 0 should be used. For each frequency step the minimum percentage of detection is 90 percent. Measurements are performed with no data traffic

3.4.Radar Test Waveforms

This section provides the parameters for required test waveforms, minimum percentage of successful detections, and the minimum number of trials that must be used for determining DFS conformance. Step intervals of 0.1 microsecond for Pulse Width, 1 microsecond for PRI, 1 MHz for chirp width and 1 for the number of pulses will be utilized for the random determination of specific test waveforms.

3.4.1.Short Pulse Radar Test Waveforms

Table 5 – Short Pulse Radar Test Waveforms

Radar Type	Pulse Width (μsec)	PRI (μsec)	Number of Pulses	Minimum Percentage of Successful Detection	Minimum Number of Trials
0	1	1428	18	See Note 1	See Note 1
1	1	Test A: 15 unique PRI values randomly selected from the list of 23 PRI values in Table 5a	$\text{Roundup}\left\{\left(\frac{1}{360}\right)\cdot\left(\frac{19\cdot 10^6}{\text{PRI}_{\mu\text{sec}}}\right)\right\}$	60%	30
		Test B: 15 unique PRI values randomly selected within the range of 518-3066 μsec, with a minimum increment of 1 μsec, excluding PRI values selected in Test A			
2	1-5	150-230	23-29	60%	30
3	6-10	200-500	16-18	60%	30
4	11-20	200-500	12-16	60%	30
Aggregate (Radar Types 1-4)				80%	120
Note 1: Short Pulse Radar Type 0 should be used for the detection bandwidth test, channel move time, and channel closing time tests.					

A minimum of 30 unique waveforms are required for each of the Short Pulse Radar Types 2 through 4. If more than 30 waveforms are used for Short Pulse Radar Types 2 through 4, then each additional waveform must also be unique and not repeated from the previous waveforms. If more than 30 waveforms are used for Short Pulse Radar Type 1, then each additional waveform is generated with Test B and must also be unique and not repeated from the previous waveforms in Tests A or B.

For example if in Short Pulse Radar Type 1 Test B a PRI of 3066 μsec is selected, the number of pulses would be Roundup { (1/360)(19×10^6/3066) } = Round up {17.2} = 18.

Table 5a - Pulse Repetition Intervals Values for Test A

Repetition Frequency Number	Pulse Repetition Frequency (Pulses Per Second)	Pulse Repetition Interval (Microseconds
1	1930.5	518
2	1858.7	538
3	1792.1	558
4	1730.1	578
5	1672.2	598
6	1618.1	618
7	1567.4	638
8	1519.8	658
9	1474.9	678
10	1432.7	698
11	1392.8	718
12	1355	738
13	1319.3	758
14	1285.3	778
15	1253.1	798
16	1222.5	818
17	1193.3	838
18	1165.6	858
19	1139	878
20	1113.6	898
21	1089.3	918
22	1066.1	938
23	326.2	3066

The aggregate is the average of the percentage of successful detections of Short Pulse Radar Types 1-4. For example, the following table indicates how to compute the aggregate of percentage of successful detections.

Radar Type	Number of Trials	Number of Successful Detections	Minimum Percentage of Successful Detection
1	35	29	82.9%
2	30	18	60%
3	30	27	90%
4	50	44	88%
Aggregate (82.9% + 60% + 90% + 88%)/4 = 80.2%			

3.4.2.Long Pulse Radar Test Waveform

Table 6 – Long Pulse Radar Test Waveform

Radar Type	Pulse Width (µsec)	Chirp Width (MHz)	PRI (µsec)	Number of Pulses per *Burst*	Number of *Bursts*	Minimum Percentage of Successful Detection	Minimum Number of Trials
5	50-100	5-20	1000-2000	1-3	8-20	80%	30

The parameters for this waveform are randomly chosen. Thirty unique waveforms are required for the Long Pulse Radar Type waveforms. If more than 30 waveforms are used for the Long Pulse Radar Type waveforms, then each additional waveform must also be unique and not repeated from the previous waveforms.

Each waveform is defined as follows:

1) The transmission period for the Long Pulse Radar test signal is 12 seconds.
2) There are a total of 8 to 20 *Bursts* in the 12 second period, with the number of *Bursts* being randomly chosen. This number is *Burst Count*.
3) Each *Burst* consists of 1 to 3 pulses, with the number of pulses being randomly chosen. Each *Burst* within the 12 second sequence may have a different number of pulses.
4) The pulse width is between 50 and 100 microseconds, with the pulse width being randomly chosen. Each pulse within a *Burst* will have the same pulse width. Pulses in different *Bursts* may have different pulse widths.
5) Each pulse has a linear frequency modulated chirp between 5 and 20 MHz, with the chirp width being randomly chosen. Each pulse within a *transmission period* will have the same chirp width. The chirp is centered on the pulse. For example, with a radar frequency of 5300 MHz and a 20 MHz chirped signal, the chirp starts at 5290 MHz and ends at 5310 MHz.
6) If more than one pulse is present in a *Burst*, the time between the pulses will be between 1000 and 2000 microseconds, with the time being randomly chosen. If three pulses are present in a *Burst*, the random time interval between the first and second pulses is chosen independently of the random time interval between the second and third pulses.
7) The 12 second transmission period is divided into even intervals. The number of intervals is equal to *Burst Count*. Each interval is of length (12,000,000 / *Burst Count*) microseconds. Each interval contains one *Burst*. The start time for the *Burst*, relative to the beginning of the interval, is between 1 and [(12,000,000 / *Burst Count*) – (Total *Burst* Length) + (One Random PRI Interval)] microseconds, with the start time being randomly chosen. The step interval for the start time is 1 microsecond. The start time for each *Burst* is chosen randomly.

A representative example of a Long Pulse Radar Type waveform:

1) The total test waveform length is 12 seconds.
2) Eight (8) *Bursts* are randomly generated for the *Burst Count*.
3) *Burst* 1 has 2 randomly generated pulses.
4) The pulse width (for both pulses) is randomly selected to be 75 microseconds.
5) The PRI is randomly selected to be at 1213 microseconds.
6) *Bursts* 2 through 8 are generated using steps 3 – 5.
7) Each *Burst* is contained in even intervals of 1,500,000 microseconds. The starting location for Pulse 1, *Burst* 1 is randomly generated (1 to 1,500,000 minus the total *Burst* 1 length + 1 random PRI interval) at the 325,001 microsecond step. Bursts 2 through 8

randomly fall in successive 1,500,000 microsecond intervals (i.e. Burst 2 falls in the 1,500,001 – 3,000,000 microsecond range).

3.4.3. Frequency Hopping Radar Test Waveform

Table 7 – Frequency Hopping Radar Test Waveform

Radar Type	Pulse Width (µsec)	PRI (µsec)	Pulses per Hop	Hopping Rate (kHz)	Hopping Sequence Length (msec)	Minimum Percentage of Successful Detection	Minimum Number of Trials
6	1	333	9	0.333	300	70%	30

For the Frequency Hopping Radar Type, the same *Burst* parameters are used for each waveform. The hopping sequence is different for each waveform and a 100-length segment is selected from the hopping sequence defined by the following algorithm:

The first frequency in a hopping sequence is selected randomly from the group of 475 integer frequencies from 5250 – 5724 MHz. Next, the frequency that was just chosen is removed from the group and a frequency is randomly selected from the remaining 474 frequencies in the group. This process continues until all 475 frequencies are chosen for the set. For selection of a random frequency, the frequencies remaining within the group are always treated as equally likely.

4.TEST SETUP

4.1.Setup Configuration of EUT and TS8997 System

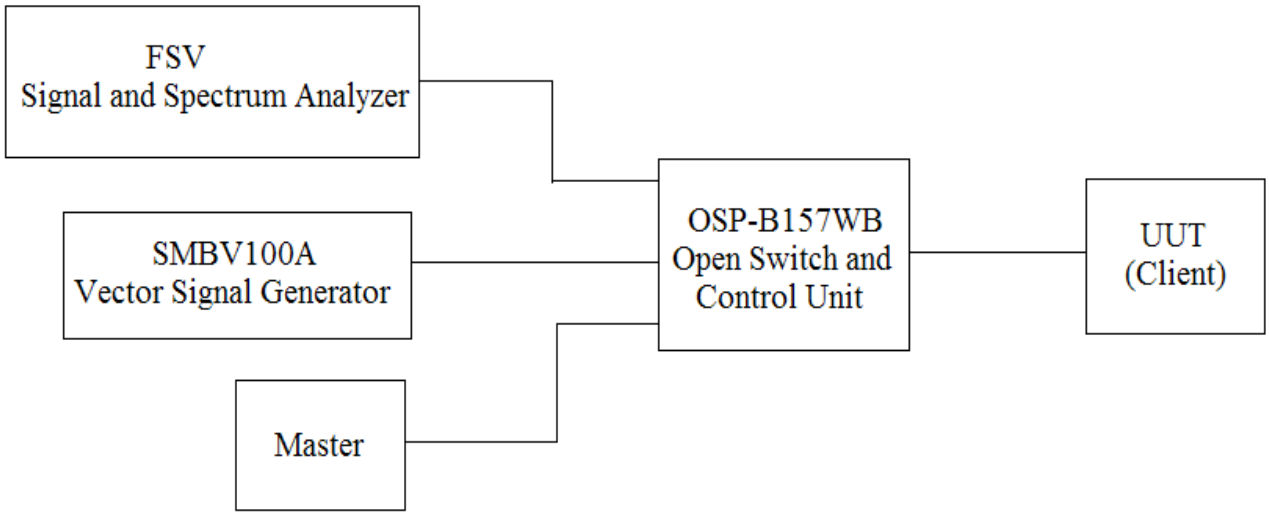

4.2.Radar Waveform Calibration

The conducted radar waveform calibration diagram of TS8997 is shown below.

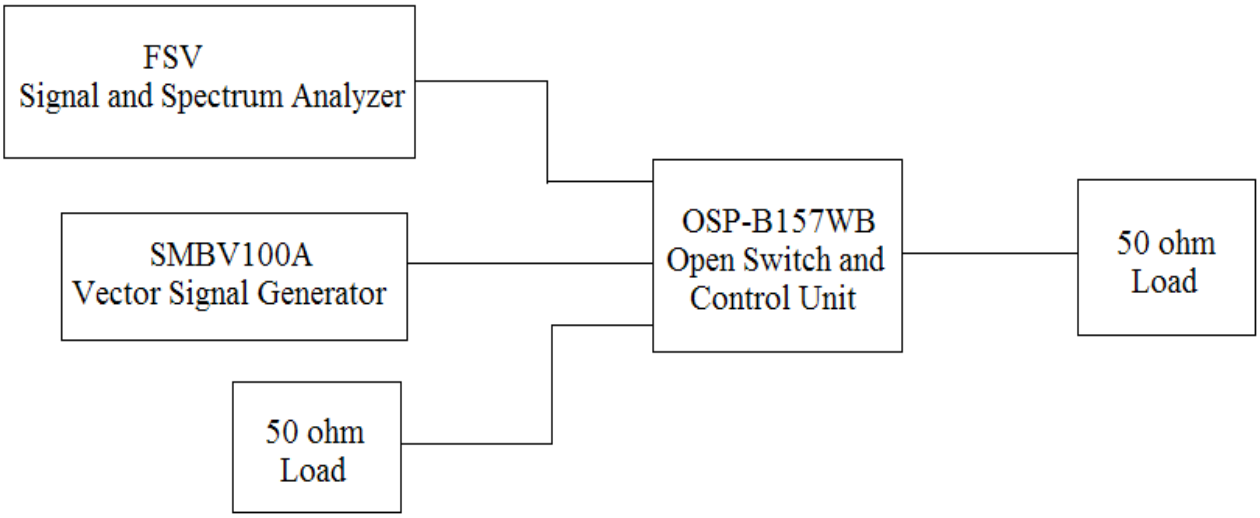

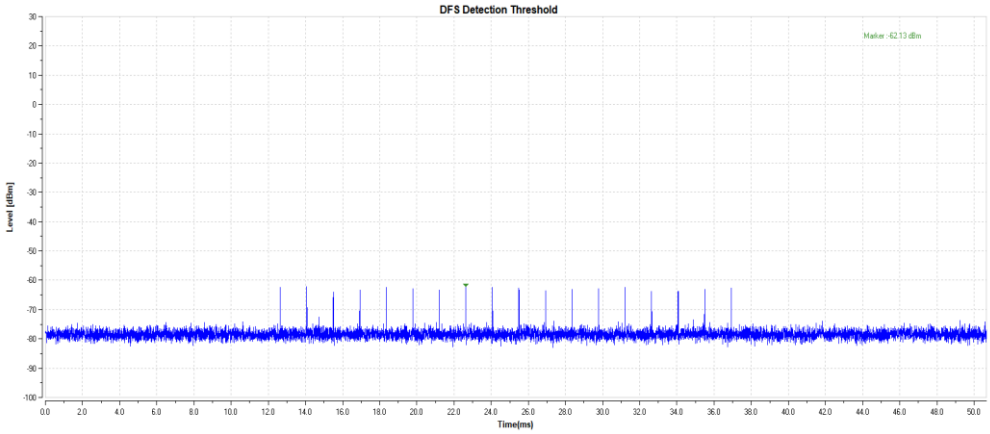

4.3.Channel Loading

DUT Frequency (MHz)	Tx-Test Duty Cycle (%)	Tx-Test Duty Cycle Limit	Tx-Test No. of Pulses found	Tx-Test Result
IEEE 802.11a 5260MHz	20.499	>=17 %	99	PASS
IEEE 802.11a 5500 MHz	24.089	>=17 %	110	PASS
IEEE 802.11 n HT40 5270 MHz	25.336	>=17 %	128	PASS
IEEE 802.11 n HT40 5510 MHz	25.219	>=17 %	125	PASS
IEEE 802.11ac VHT80 5290 MHz	30.203	>=17 %	133	PASS
IEEE 802.11ax HE80 5290 MHz	19.764	>=17 %	98	PASS
IEEE 802.11be EHT80 5290MHz	19.141	>=17 %	94	PASS
IEEE 802.11ac VHT160 5570MHz	29.833	>=17 %	131	PASS
IEEE 802.11ax HE160 5570MHz	29.114	>=17 %	129	PASS
IEEE 802.11be EHT160 5570MHz	18.553	>=17 %	88	PASS

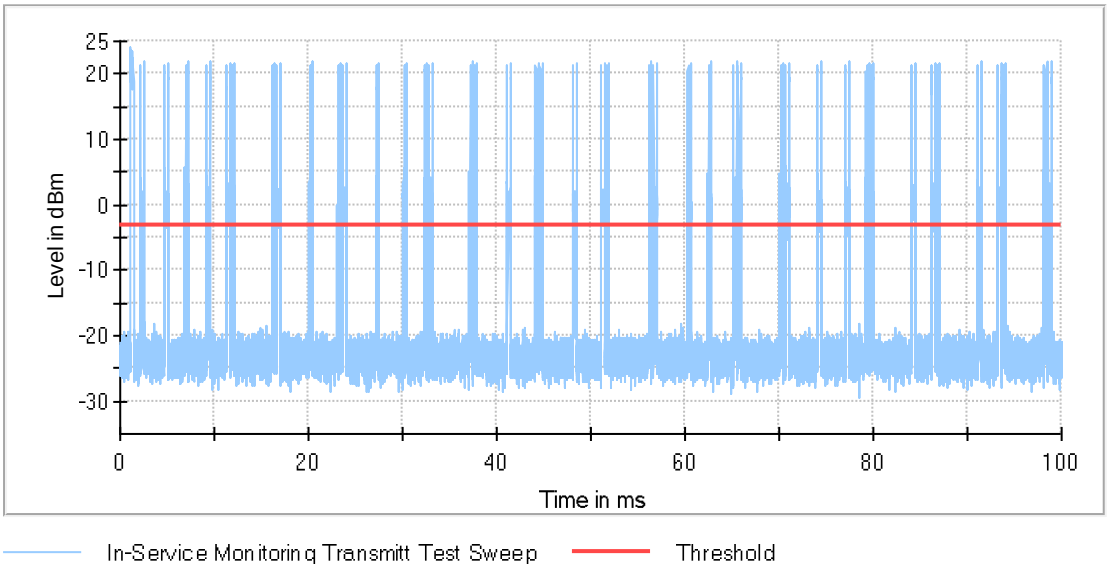

5.IN-SERVICE MONITORING FOR CHANNEL MOVE TIME, CHANNEL CLOSING TRANSMISSION TIME AND NON-OCCUPANCY PERIOD

5.1.Test Procedure

The steps below define the procedure to determine the above mentioned parameters when a radar Burst with a level equal to the DFS Detection Threshold + 1dB is generated on the Operating Channel of the U-NII device (In- Service Monitoring).

a) One frequency will be chosen from the Operating Channels of the UUT within the 5250-5350 MHz or 5470-5725 MHz bands. For 802.11 devices, the test frequency must contain control signals. This can be verified by disabling channel loading and monitoring the spectrum analyzer. If no control signals are detected, another frequency must be selected within the emission bandwidth where control signals are detected.

b) In case the UUT is a U-NII device operating as a Client Device (with or without DFS), a U-NII device operating as a Master Device will be used to allow the UUT (Client device) to Associate with the Master Device. In case the UUT is a Master Device, a U-NII device operating as a Client Device will be used and it is assumed that the Client will Associate with the UUT (Master). In both cases for conducted tests, the Radar Waveform generator will be connected to the Master Device. For radiated tests, the emissions of the Radar Waveform generator will be directed towards the Master Device. If the Master Device has antenna gain, the main beam of the antenna will be directed toward the radar emitter. Vertical polarization is used for testing.

c) Stream the channel loading test file from the Master Device to the Client Device on the test Channel for the entire period of the test.

d) At time T0 the Radar Waveform generator sends a Burst of pulses for one of the Radar Type 0 in **Table 5** at levels defined in **Table 3**, on the Operating Channel. An additional 1 dB is added to the radar test signal to ensure it is at or above the DFS Detection Threshold, accounting for equipment variations/errors.

e) Observe the transmissions of the UUT at the end of the radar Burst on the Operating Channel for duration greater than 10 seconds. Measure and record the transmissions from the UUT during the observation time (Channel Move Time). Measure and record the Channel Move Time and Channel Closing Transmission Time if radar detection occurs. f) When operating as a Master Device, monitor the UUT for more than 30 minutes following instant T2 to verify that the UUT does not resume any transmissions on this Channel. Perform this test once and record the measurement result.

g) In case the UUT is a U-NII device operating as a Client Device with In-Service Monitoring, perform steps a) to f).

5.2.Channel Move Time&Channel Close Transmission Time Test Result

Frequency (MHz)	Radar Type No.	CMT Tx Time (s)	CMT Limit (s)	Result
IEEE 802.11a 5260MHz	0	2.140	10.000	PASS
IEEE 802.11a 5500 MHz	0	2.104	10.000	PASS
IEEE 802.11 n HT40 5270 MHz	0	2.091	10.000	PASS
IEEE 802.11 n HT40 5510 MHz	0	2.072	10.000	PASS
IEEE 802.11ac VHT80 5290 MHz	0	1.993	10.000	PASS
IEEE 802.11ax HE80 5290 MHz	0	2.129	10.000	PASS
IEEE 802.11be EHT80 5290MHz	0	2.095	10.000	PASS
IEEE 802.11ac VHT160 5570MHz	0	2.121	10.000	PASS
IEEE 802.11ax HE160 5570MHz	0	2.121	10.000	PASS
IEEE 802.11be EHT160 5570MHz	0	2.061	10.000	PASS

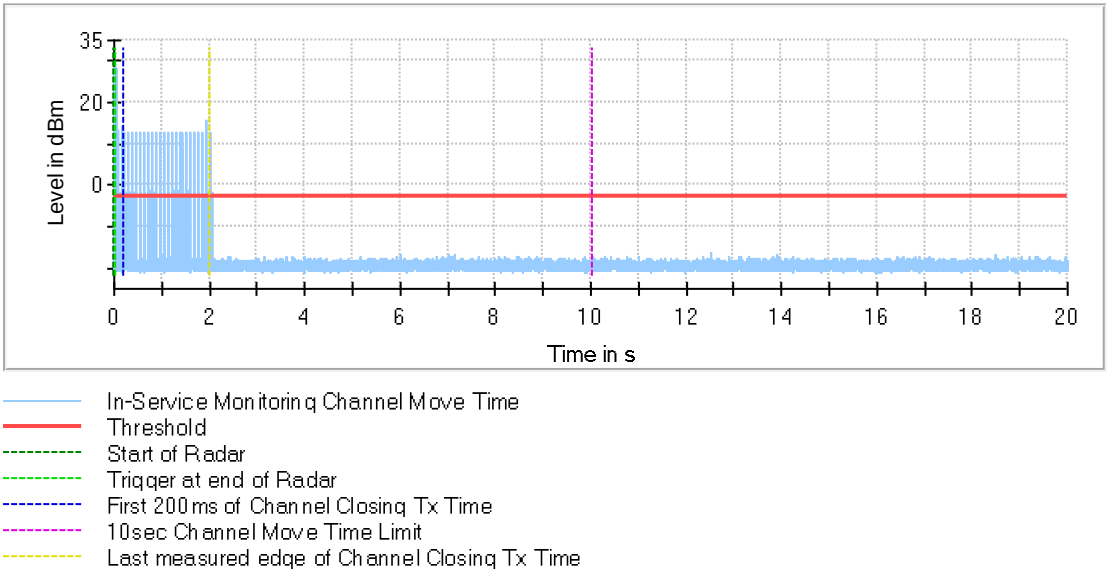

Frequency (MHz)	Radar Type No.	CCTT Type of Value	CCTT No. of Pulses found	CCTT Tx Time (ms)	Limit (ms)	Result
IEEE 802.11a 5260MHz	0	first 200 ms	2	0.672	200	PASS
	0	remaining 10.0 second(s) period	19	6.472	60	PASS
IEEE 802.11a 5500MHz	0	first 200 ms	2	0.672	200	PASS
	0	remaining 10.0 second(s) period	19	6.468	60	PASS
IEEE 802.11 n HT40 5270 MHz	0	first 200 ms	602	11.520	200	PASS
	0	remaining 10.0 second(s) period	357	14.968	60	PASS
IEEE 802.11 n HT40 5510 MHz	0	first 200 ms	2	0.832	200	PASS
	0	remaining 10.0 second(s) period	19	7.992	60	PASS
IEEE 802.11ac VHT80 5290 MHz	0	first 200 ms	6	0.340	200	PASS
	0	remaining 10.0 second(s) period	85	13.864	60	PASS
IEEE 802.11ax HE80 5290 MHz	0	first 200 ms	8	2.020	200	PASS
	0	remaining 10.0 second(s) period	84	26.432	60	PASS
IEEE 802.11be EHT80 5290MHz	0	first 200 ms	11	3.840	200	PASS
	0	remaining 10.0 second(s) period	85	27.564	60	PASS
IEEE 802.11ac VHT160 5570MHz	0	first 200 ms	6	0.268	200	PASS
	0	remaining 10.0 second(s) period	67	3.132	60	PASS
IEEE 802.11ax HE160	0	first 200 ms	6	0.268	200	PASS

5570MHz	0	remaining 10.0 second(s) period	67	3.132	60	PASS
IEEE 802.11be EHT160 5570MHz	0	first 200 ms	8	0.388	200	PASS
	0	remaining 10.0 second(s) period	65	3.028	60	PASS

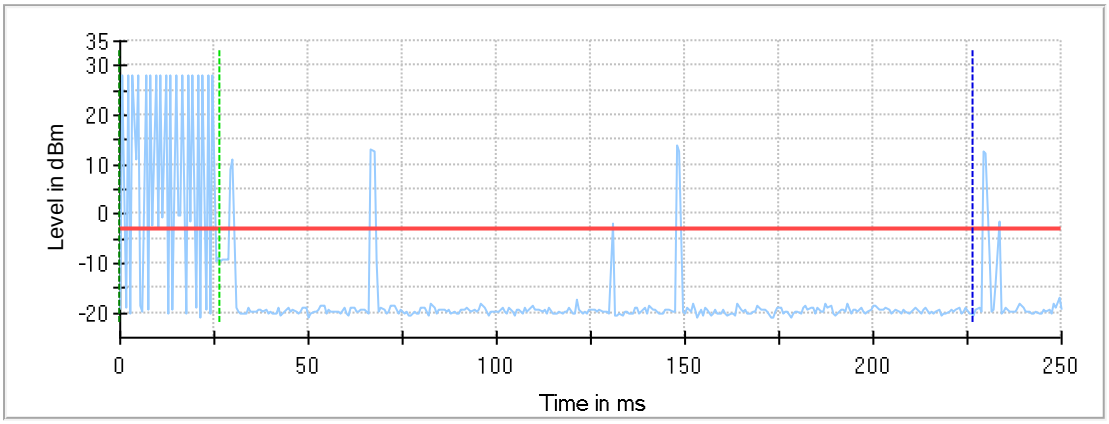

In-Service Monitoring Channel Move Time first 200ms
Threshold
Start of Radar
Trigger at end of Radar
First 200ms of Channel Closing Tx Time

5.3.Non-Occupancy Period Test Result

Frequency (MHz)	Radar Type No.	NOP No. of Pulses found	NOP No. of Pulses Limit	NOP Tx Time (s)	NOP Tx Time Limit (s)	Result
IEEE 802.11a 5260MHz	0	0	0	0.000	0.000	PASS
IEEE 802.11a 5500 MHz	0	0	0	0.000	0.000	PASS
IEEE 802.11 n HT40 5270 MHz	0	0	0	0.000	0.000	PASS
IEEE 802.11 n HT40 5510 MHz	0	0	0	0.000	0.000	PASS
IEEE 802.11ac VHT80 5290 MHz	0	0	0	0.000	0.000	PASS
IEEE 802.11ax HE80 5290 MHz	0	0	0	0.000	0.000	PASS
IEEE 802.11be EHT80 5290MHz	0	0	0	0.000	0.000	PASS
IEEE 802.11ac VHT160 5570MHz	0	0	0	0.000	0.000	PASS
IEEE 802.11ax HE160 5570MHz	0	0	0	0.000	0.000	PASS
IEEE 802.11be EHT160 5570MHz	0	0	0	0.000	0.000	PASS

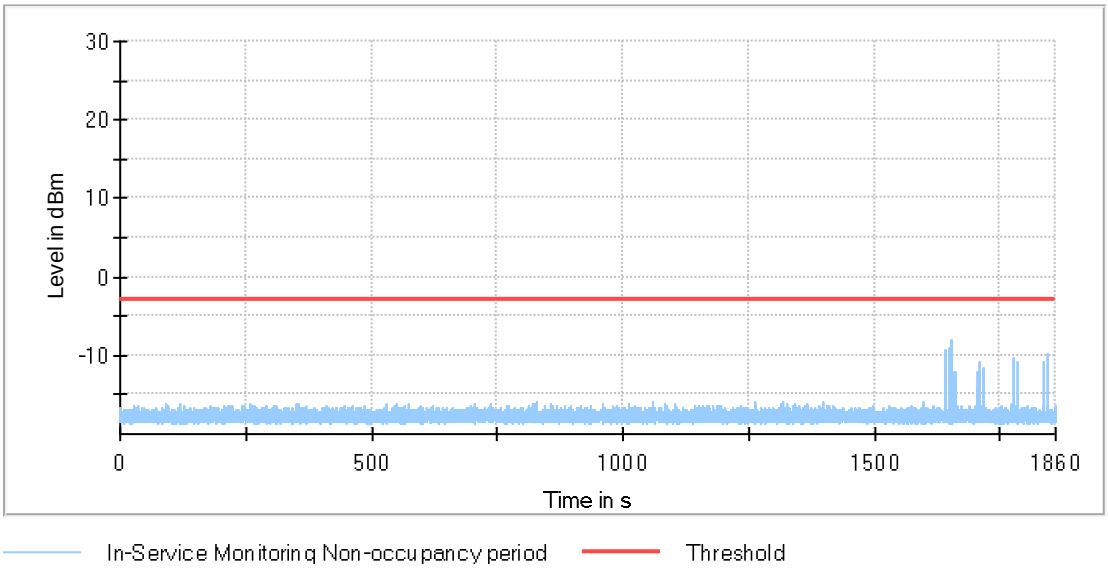

6.TEST SETUP PHOTO

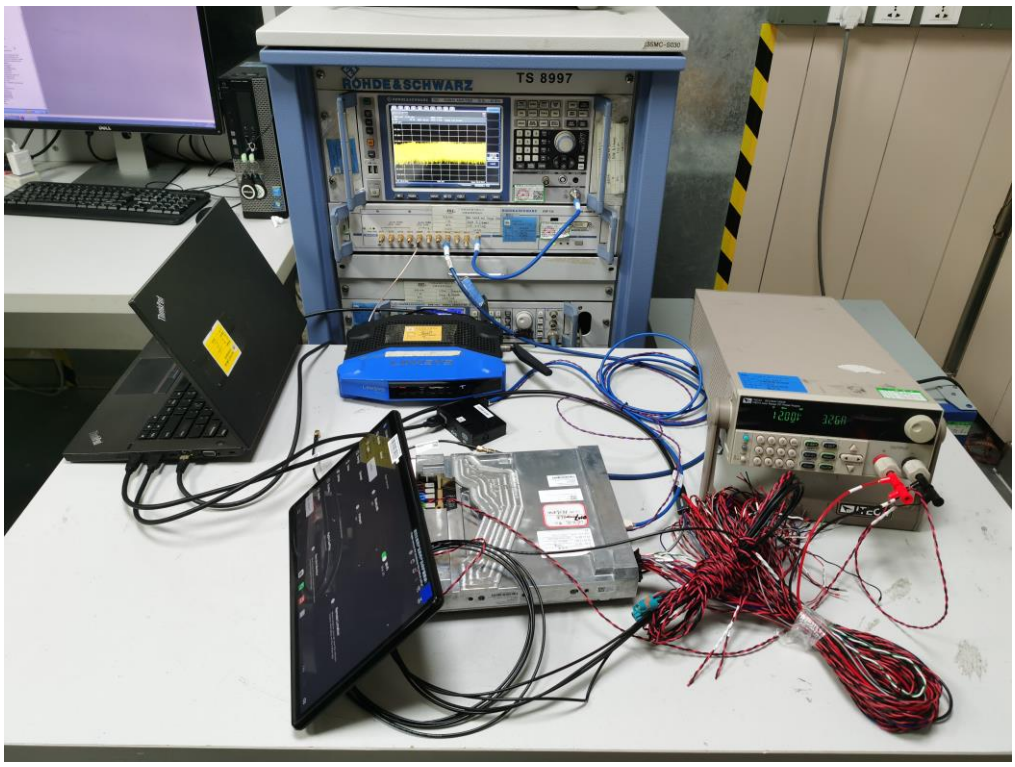

End of Test Report