OWNER MANUAL

YOMOVA

countertop payments

streamlined innovation

an atos company

worldline
e-payment services

Legal disclaimer and copyrights

The information in this document is subject to change without notice and shall not be construed as a commitment by Worldline S.A./N.V. (“Worldline”)

The content of this document, including but not limited to trademarks, designs, logos, text, images, is the property of Worldline and is protected by the Belgian Act of 30.06.1994 related to authors’ rights and by the other applicable Acts.

The word YOMOVA and other trademarks used in this document are the property of Worldline. Worldline trademarks used in this document are indicated. Linux is a registered trademark of Linus Torvalds, Java is a registered trademark of Oracle and/or its affiliates and Android is a trademark of Google Inc.

The contents of this document can be reproduced by or on behalf of third parties with the prior written consent of Worldline and following its instructions. Worldline accepts no responsibility for errors and omissions introduced when translating or reworking this document.

Except with respect to the limited licence to download and print certain material from this document for non-commercial and personal use only, nothing contained in this document shall grant any licence or right to use any of Worldline's proprietary material.

While Worldline has made every attempt to ensure that the information contained in this document is correct, Worldline does not provide any legal or commercial warranty on the document that is described in this specification. The technology is thus provided “as is” without warranties of any kind, expressed or implied, included those of merchantability and fitness for a particular purpose. Worldline does not warrant or assume any legal liability or responsibility for the accuracy, completeness, or usefulness of any information, product or processes disclosed.

To the fullest extent permitted under applicable law, neither Worldline nor its affiliates, directors, employees and agents shall be liable to any party for any damages that might result from the use of the technology as described in this document (including without limitation direct, indirect, incidental, special, consequential and punitive damages, lost profits).

These terms shall be governed by and construed in accordance with the laws of Belgium. You irrevocably consent to the jurisdiction of the courts located in Brussels for any action arising from or related to the use of this document.

Document information

document title	YOMOVA countertop – owner manual
security	unrestricted
last modified	16 February 2017
owner	Philippe Lesire
author	Niels Grundtvig Nielsen
version	2.2

© Worldline 2014, 2016, 2017

Contents

Introduction 1

About the YOMOVA 1

About this manual 1

What is new in this version 2

Change log 2

Terminal and accessories 3

YOMOVA top view 3

YOMOVA side view 4

YOMOVA bottom view 4

Connector compartment 5

Card compartment 5

Installing the YOMOVA countertop 7

Unpacking the YOMOVA 7

Preparing a YOMOVA for operation 7

Selecting a location 8

Installing SAM 8

Connecting communications cables 10

Loading paper 12

Powering up the YOMOVA 14

Using the YOMOVA countertop 17

Security recommendations 17

Reading a chip card 17

Reading a magstripe card 19

Reading a contactless card/device 20

Resetting the YOMOVA – Reset button 20

Resetting the YOMOVA – restart 21

Maintaining the YOMOVA countertop 23

Cleaning the YOMOVA 23

Cleaning the card readers 24

Troubleshooting 25

Operating your YOMOVA countertop safely 27

Operating conditions 27

Electrical installations 28

Power supply 28

Printer and paper 28
Opening the terminal 28
Servicing 28

Approvals and operating conditions 29

Operating conditions 29

Decommissioning a YOMOVA 31

Step by step 31

Figures

Figure 1. YOMOVA top view 3
Figure 2. Keypad layout..... 3
Figure 3. YOMOVA side view..... 4
Figure 4. YOMOVA – bottom view 4
Figure 5. Connector compartment..... 5
Figure 6. Card compartment..... 5
Figure 7. Removing card cover 8
Figure 8. Opening SAM holder 9
Figure 9. Inserting SAM card and closing holder..... 9
Figure 10. Opening the connector compartment 10
Figure 11. Fixing cables to terminal..... 10
Figure 12. Closing the connector compartment..... 11
Figure 13. Opening paper compartment..... 12
Figure 14. Inserting paper roll..... 12
Figure 15. Closing paper compartment 13
Figure 16. Tearing off paper 13
Figure 17. YOMOVA power supplies – European / universal..... 14
Figure 18. Removing connector compartment cover..... 14
Figure 19. Power input socket – YOMOVA 15
Figure 20. Closing the connector compartment..... 15
Figure 21. Reading a chip card 18
Figure 22. Reading a magstripe card 19
Figure 23. Reading a smart card with the contactless reader 20
Figure 24. Reset button on YOMOVA 21
Figure 25. Cleaning the card-readers..... 24

Introduction

This document includes information for the YOMOVA countertop terminal. It is intended as a resource where distributors can find the information they need to assemble and translate their own documentation.

Places where cross-references should be included are identified with [xref]

About the YOMOVA

The YOMOVA is a compact, fully-featured, versatile payment terminal. It is powered by the latest Worldline dedicated dual-core processor, giving unrivalled performance and security plus the environmental benefit of intelligent power management features.

The large full-colour display with touch panel enhances the user experience by supporting optimum interaction. The integrated PIN protection shield around the ergonomic keypad prompts the cardholder to trust the YOMOVA and makes it easy to use with confidence.

The YOMOVA accepts chip cards and magstripe cards, and interfaces with contactless devices (cards, smart phones …) through its integrated antenna. It can be integrated with local POS systems (ECR, tablet …) using local communications – RS 232, Ethernet and USB.

The impressive hardware specificication is completed with a fast and silent integrated printer.

About this manual

This manual contains information for owners of YOMOVA terminals, with sections covering:

- terminal and accessories
- installing the terminal
- powering up the terminal
- using the terminal
- maintaining the terminal
- troubleshooting
- safety information
- technical specifications

What is new in this version

Version 2.2 contains extra information about fixing cable to the terminal, under Connecting communications cables, on page 10.

Changes/updates in this version are indicated with a change bar. A change bar for a heading or title means that everything until the next heading has been changed or updated. Significant deletions are ~~struck through in grey~~.

Change log

document release 2.1

New appendix Operating your YOMOVA countertop safely, on page 27.

document release 2.0

Extra information about recommended security checks, in the chapter Installing the YOMOVA countertop and under Security recommendations, on page 17.

Terminal and accessories

The YOMOVA countertop is mains powered, and supports RS 232 and USB (device) for local connectivity. Extra communications options are PSTN and Ethernet.

YOMOVA top view

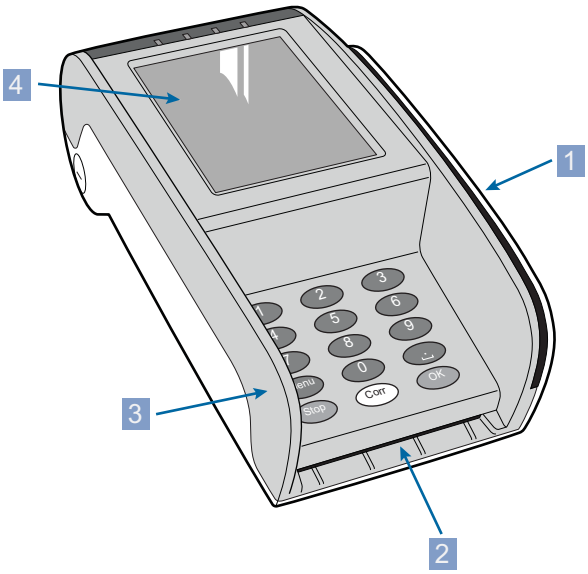

Figure 1. YOMOVA top view			
1	magstripe-card reader	3	integrated PIN privacy shield against shoulder-surfing
2	chip-card reader	4	integrated NF reader under display

Figure 2. Keypad layout

YOMOVA side view

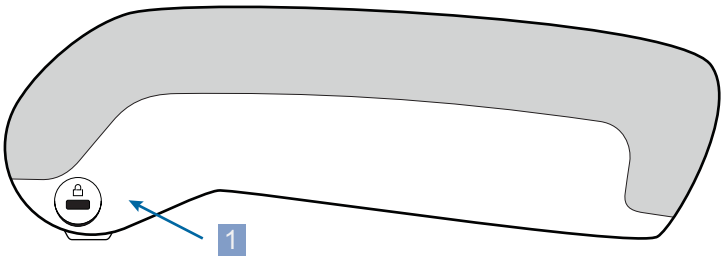

Figure 3. YOMOVA side view	
1	Kensington™ lock fixing point

YOMOVA bottom view

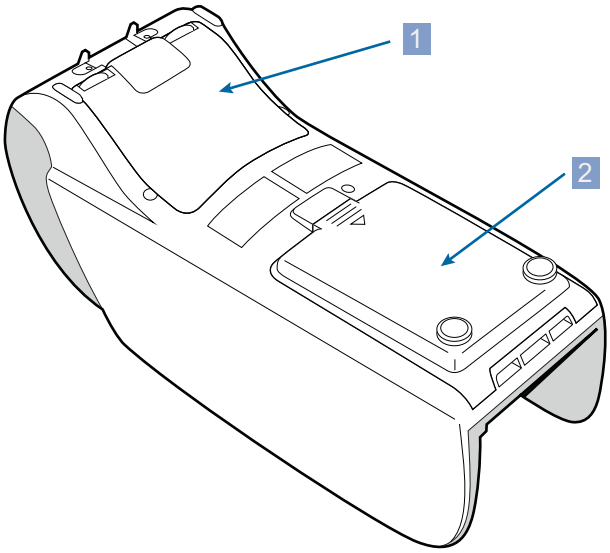

Figure 4. YOMOVA – bottom view	
1	connector compartment
2	card slot compartment

Connector compartment

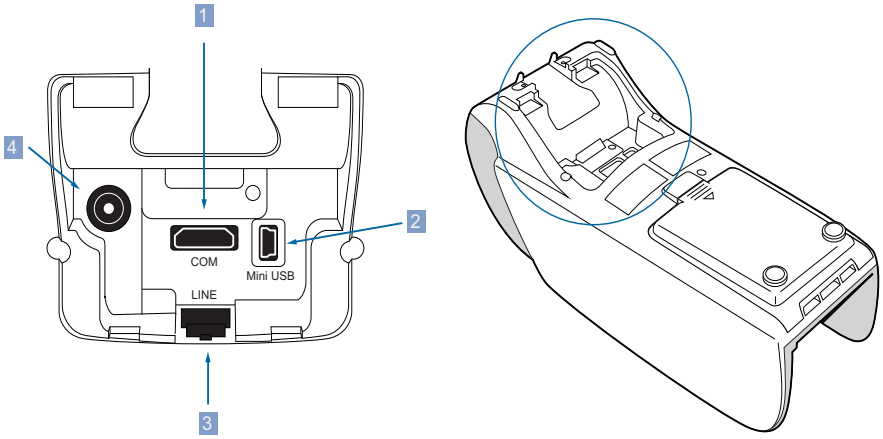

Figure 5. Connector compartment	
1	OM – Ethernet and RS232
2	USB device
3	PSTN
4	power input (mains adaptor)

Card compartment

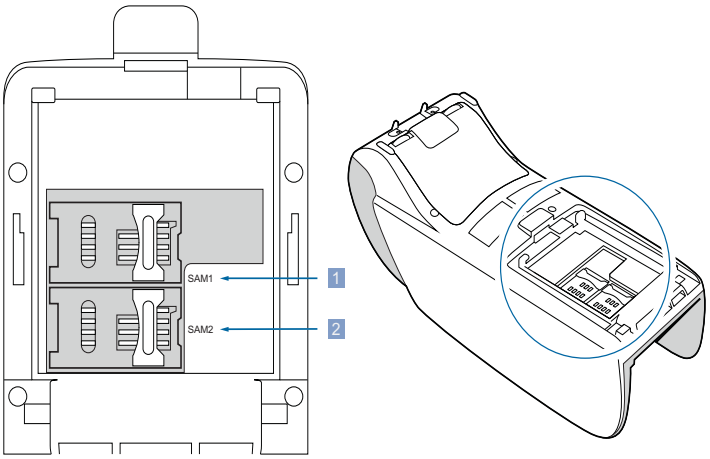

Figure 6. Card compartment	
1	SAM slot 1
2	SAM slot 2

Installing the YOMOVA countertop

You can call upon a technician or a field engineer to help you install your terminal or you can do it yourself. If you decide to install the terminal yourself, remember the guidelines below.

- if you decide to install the YOMOVA yourself, neither Worldline nor its vendor will bear any responsibility or cost for malfunctioning, breakdowns or any anomaly that may result from incorrect manipulation of the terminal
- read the safety recommendations on page 48 before starting to install your YOMOVA.
- if you notice that any part of the YOMOVA does not fit, blocks or shows any other malfunction, contact your vendor – do not try yourself to repair or alter it in any way.
- use only accessories (power adaptor, cables and so on) provided by your vendor or by an approved source

Check that installation/maintenance operations are performed by a trusted person. Log all maintenance operations, including the name of the operator.

In the tampered state, the device displays a warning message and it is not possible to use the terminal to make a payment. When a warning message is displayed:

1. remove the terminal from service
2. contact the supplier immediately, who may then report the problem to Worldline
3. keep the terminal available for possible forensic investigation

Unpacking the YOMOVA

1. Open the package and check the contents.

   The package should contain a YOMOVA and a mains adaptor. If either of these is missing, contact your vendor immediately.

   Your vendor may also have included paper for the printer, documentation or accessories.

2. Inspect the package and its contents for damage.

   If anything is missing or damaged, contact your shipping company immediately and notify your vendor.

3. Save the box for repacking or moving your equipment in the future.
4. Check the terminal as described in Security recommendations, on page 17.

Preparing a YOMOVA for operation

1. Make sure the location and operating conditions are suitable
2. Install the SAM or SAMS, if required
3. Connect all required communications cables to the terminal

4. Put a roll of paper in the printer
5. Connect mains adaptor

Selecting a location

Finding a proper location is an important aspect of installing your YOMOVA. You need to balance comfort and security. Follow the guidelines below to find a location that is convenient for both you and your customers.

For a YOMOVA, make sure that:

- the keypad and the display are facing the customer
- the terminal is at an appropriate height for the customer, depending on whether they will be sitting or standing to use it
- there is enough space (typically 10 cm on all sides) around the terminal, so that it is easy to read a card or tap a contactless device
- direct light sources do not make it difficult to read the display or the keypad

Make sure that customers have the necessary privacy when entering their PIN code. This means locating the YOMOVA outside the field of vision of cameras, mirrors and so on.

Make sure you have room to open the cover of the printer and replace the paper.

Installing SAM

Some applications also require one or more SAMs to be installed. The SAM slots are located in the card compartment on the underside of the YOMOVA.

1. Remove the card cover.

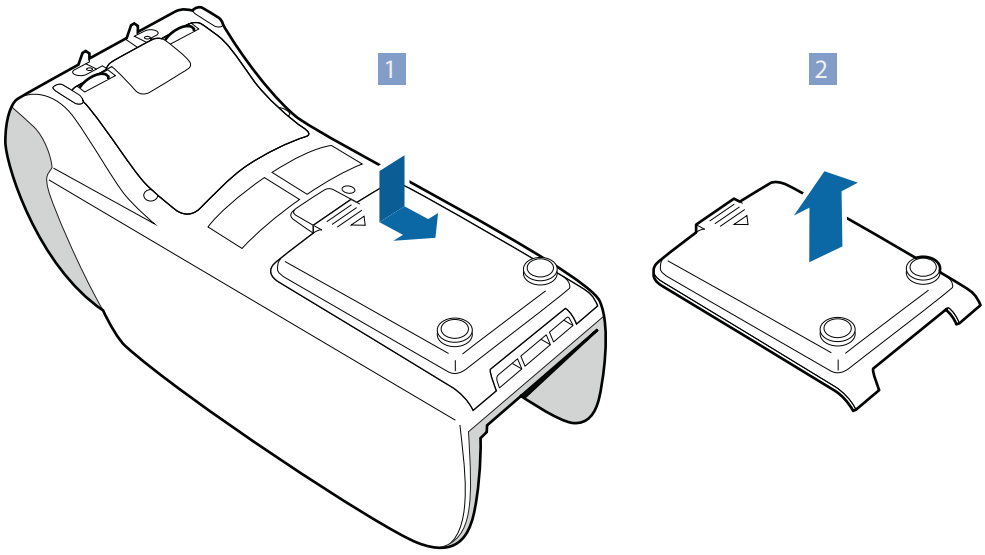

Figure 7. Removing card cover

2. Open the SAM holder: slide the latch towards the hinge until you hear a click, then lift the

holder.

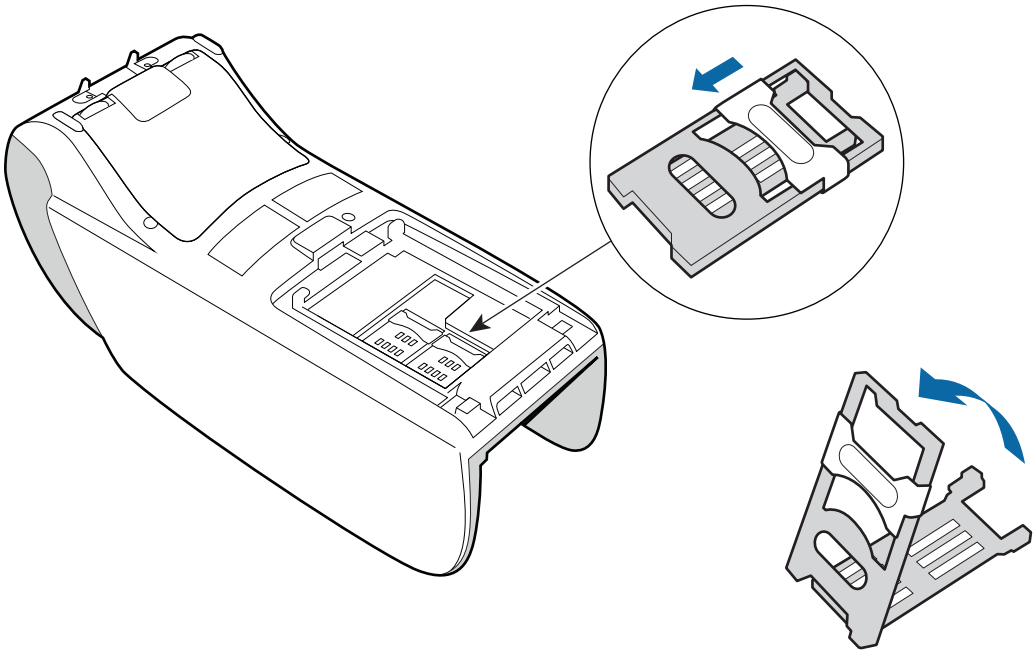

Figure 8. Opening SAM holder

3. Insert the SAM in the holder with the bevel towards the open end of the holder.
   Make sure SAM cards are completely inserted.
4. Close the SAM holder or holders.

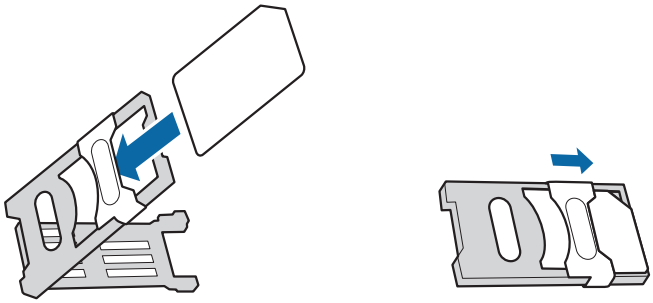

Figure 9. Inserting SAM card and closing holder

   Make sure the bevel fits behind the corner, then slide the latch away from the hinge until you hear a click.
5. Make sure all SAM holders are closed.
6. Replace the card cover.

Connecting communications cables

The compartment underneath the YOMOVA gives access to connectors for:

- Ethernet and RS232
- USB device
- PSTN
- power input (mains adaptor)

Special single and combined cables are available to connect the YOMOVA to the power supply, Ethernet, PSTN, RS232 and/or USB. See the documentation on cables to find the most appropriate solution.

To connect any of these cables:

1. Open the clips to release the cover of the connector compartment.
2. Lift the cover off the YOMOVA.

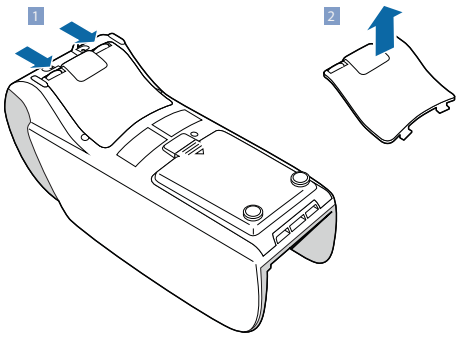

Figure 10. Opening the connector compartment

3. Connect cables as required, routing them through the slot at the back of the terminal.
4. Fix the cable to the terminal using the screws provided

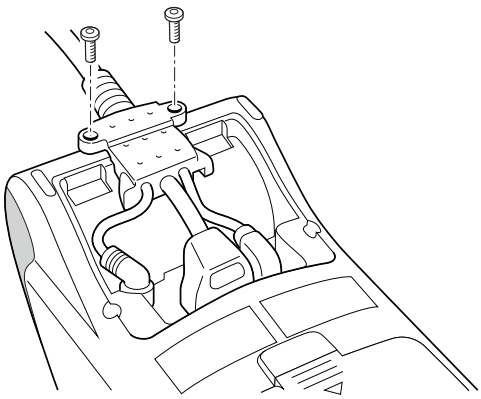

Figure 11. Fixing cables to terminal

5. Replace the cover and press down between the clips until the cover clicks shut.

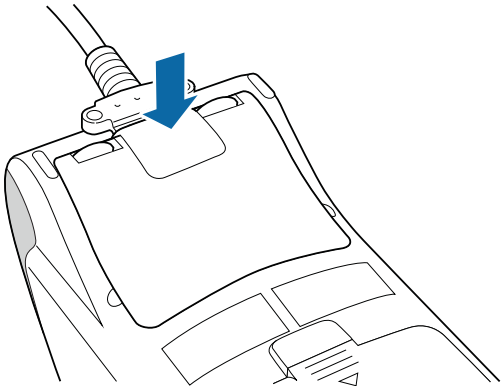

Figure 12. Closing the connector compartment

Loading paper

Only use paper approved by Worldline.

This paper can be recognised by the approval seal printed on the back of the paper. If you want to order paper from your local paper supplier, contact your vendor.

1. Lift the cover to release it, then open it fully.

   Do not remove the roller inside the paper compartment.

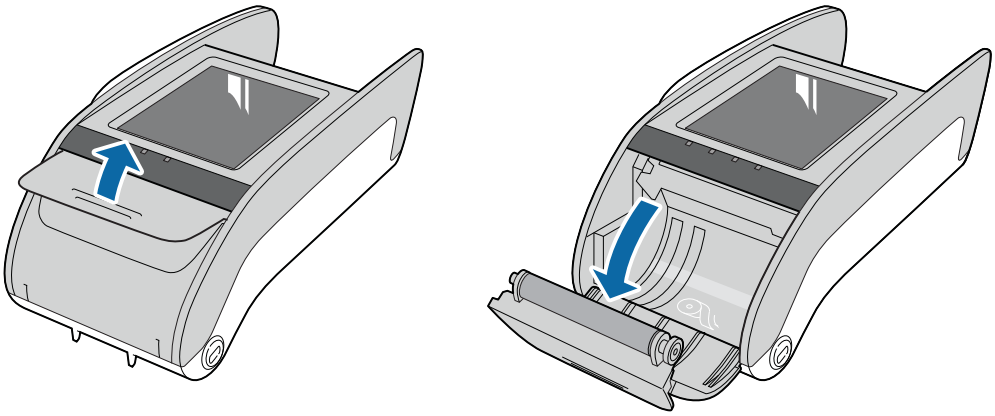

Figure 13. Opening paper compartment

2. Unroll about 5 centimetres of a new paper roll and insert the roll as shown.

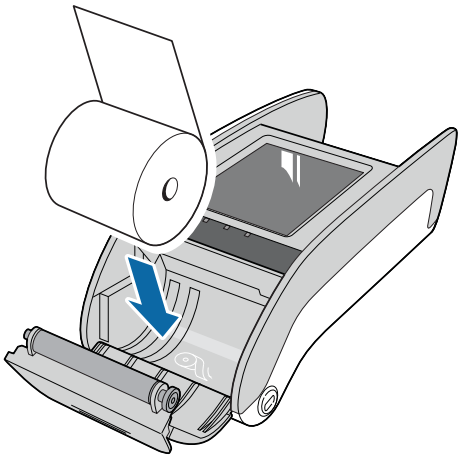

Figure 14. Inserting paper roll

   When inserting a paper roll, make sure that:

   – the paper is not cracked, wrinkled or sealed
   – the paper comes out straight

3. Close the paper cover, and press firmly until you hear a click.

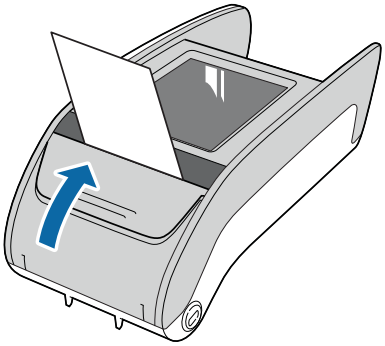

Figure 15. Closing paper compartment

4. Tear off the leading edge of the paper.

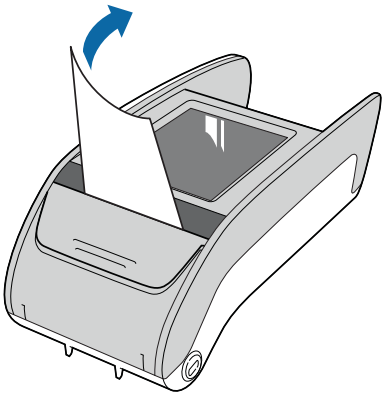

Figure 16. Tearing off paper

Powering up the YOMOVA

The YOMOVA countertop uses a power adaptor. The power cable from the adaptor connects to the power input socket in the connector compartment. The terminal powers up as soon as the mains adaptor is correctly connected.

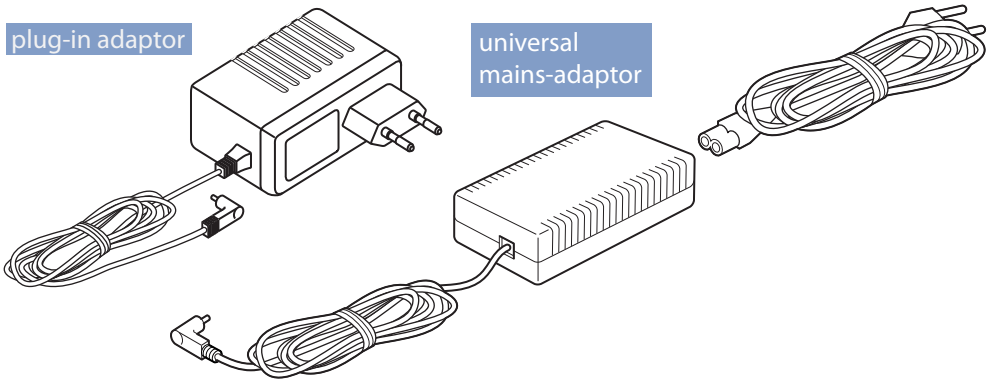

Figure 17. YOMOVA power supplies – European / universal

Plug the power cable from the adaptor into the power socket in the connector compartment.

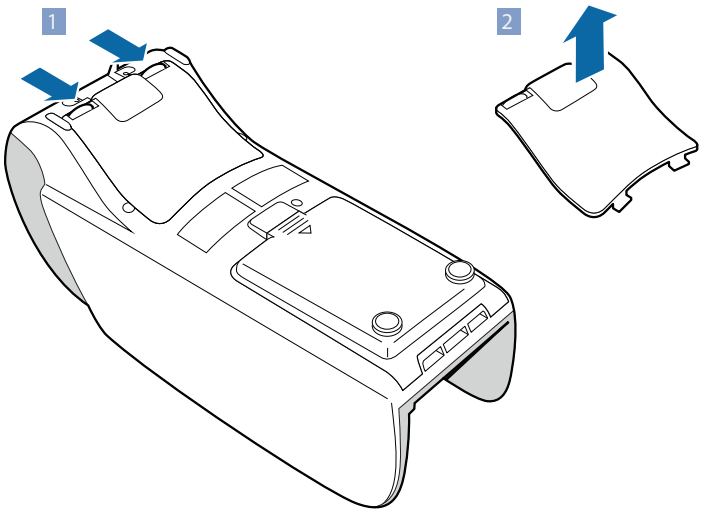

Figure 18. Removing connector compartment cover

1. Open the connector compartment.
2. Connect the power cable from the mains adaptor to the power input socket on the YOMOVA.

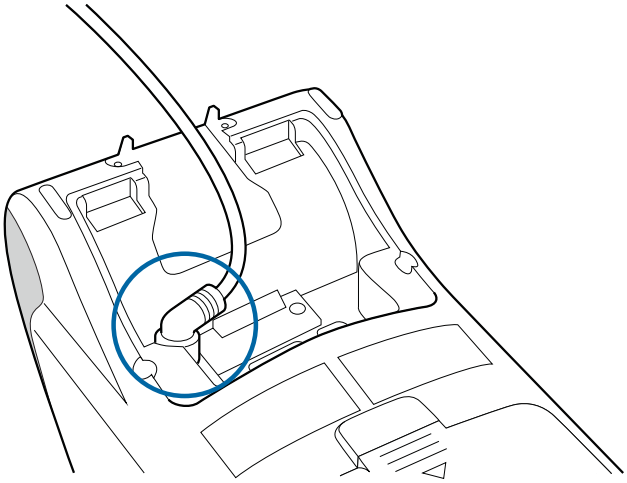

Figure 19. Power input socket – YOMOVA

3. Replace the connector cover.

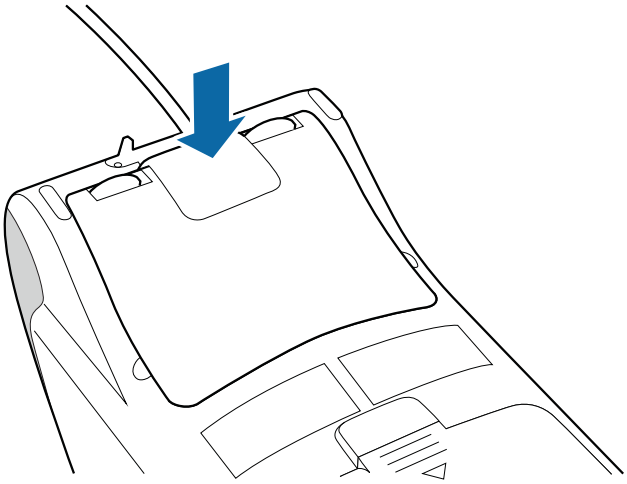

Figure 20. Closing the connector compartment

4. Connect the power adaptor to the mains.

Using the YOMOVA countertop

The YOMOVA reads chip cards, magstripe cards and contactless devices, and includes a built-in printer.

Security recommendations

For security reasons, you are advised to check your YOMOVA every working day. Make sure that:

- there is no sign of unusual cables connected anywhere on the terminal
- there is no foreign object in either of the card-readers
- the keypad is firmly in place
- the terminal is not displaying any warning message
- the housing is not visibly damaged
- the terminal serial number (on the label) corresponds to the inventory

In the tampered state, the device displays a warning message and it is not possible to use the terminal to make a payment. When a warning message is displayed:

1. remove the terminal from service
2. contact the supplier immediately, who may then report the problem to Worldline
3. keep the terminal available for possible forensic investigation

Reading a chip card

Insert the card in the slot at the front of the YOMOVA with the chip facing upwards.

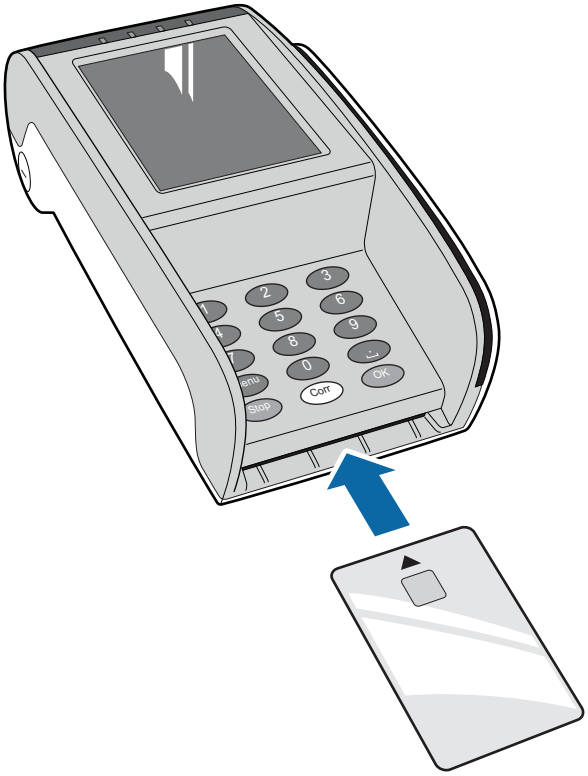

Figure 21. Reading a chip card

Reading a magstripe card

1. Swipe the card through the reader at the right-hand side of the YOMOVA in one smooth movement.

   Hold the card with the magnetic stripe at the bottom. You can slide the card in either direction.

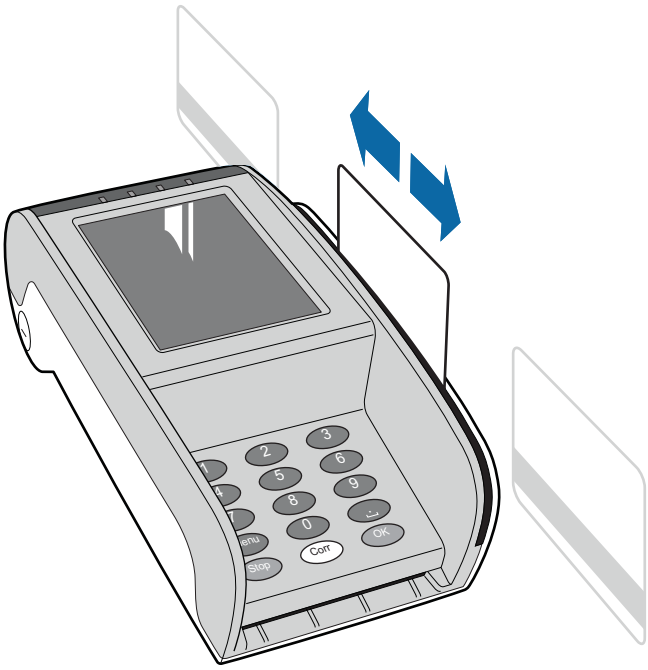

Figure 22. Reading a magstripe card

Reading a contactless card / device

When the payment application supports contactless cards/devices, the landing-point symbol appears on the display.

1. Hold the card/device above the display, centered on the landing point.

   The first LEDs above the display is lit when the terminal is ready for a contactless transaction; the other LEDs show the progress of the transaction, as defined by the application.

Figure 23. Reading a smart card with the contactless reader

Resetting the YOMOVA – Reset button

If the YOMOVA stops responding, you can use the Reset button.

The button is located on the back of the YOMOVA just above the card slot compartment. Use a small object to push it in for one second, then wait for the YOMOVA to restart.

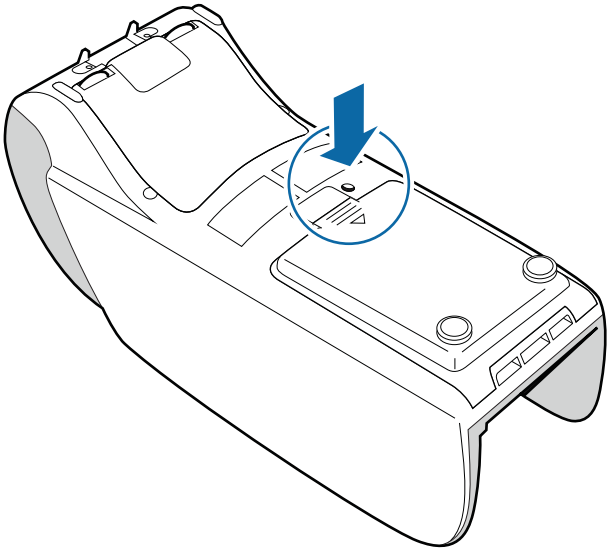

Figure 24. Reset button on YOMOVA

You can also reset the YOMOVA by disconnecting and reconnecting the power supply.

Resetting the YOMOVA – restart

1. Disconnect the power supply from the terminal.
2. Wait a few seconds for the YOMOVA to power down completely.
3. Reconnect the power supply to restart the terminal.

Maintaining the YOMOVA countertop

Maintenance for the YOMOVA is limited to cleaning the case and the card readers.

Never attempt to dismantle the YOMOVA or force open the case. If the terminal needs servicing, contact Worldline or your vendor.

Cleaning the YOMOVA

Do not allow water to enter the terminal. Use only a damp cloth.

For optimal functioning, the YOMOVA should be kept clean and cleaned regularly. When cleaning your equipment:

1. Disconnect the terminal from the mains adaptor or battery charger.
2. Clean the equipment with a soft damp cleaning cloth.
3. Clean the display with a soft dry anti-static cleaning cloth.

After cleaning, do not forget to re-connect the equipment.

Do not use detergents, solvents or alcohol. These products may damage the surface of the terminal and make transparent parts opaque. Make sure that dirt does not enter the card readers.

Cleaning the card readers

Do not allow water to enter the card readers. Use only a damp cloth.

The chip-card reader and the magstripe-card reader should be cleaned regularly, using the appropriate cleaning cards.

- cleaning-cards can be used more than once, as long as you swipe or insert a clean edge each time
- “wet” cleaning-cards must be used as soon as you open the sachet

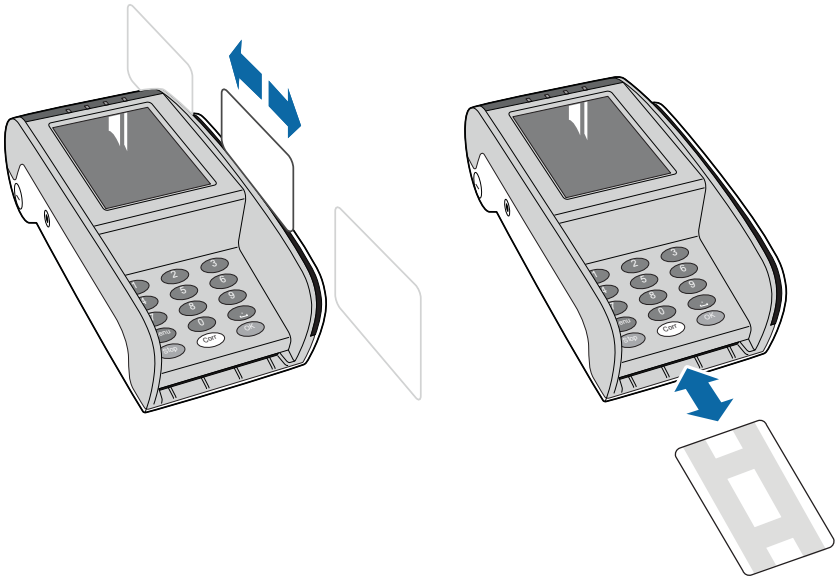

Figure 25. Cleaning the card-readers

- for the magstripe-card reader, swipe the cleaning card slowly through the reader three times in each direction, without turning the card round
- for the chip-card reader, insert and remove the cleaning card three times without turning the card round

Contact your vendor for information about specific types of cleaning card, such as “damp” cleaning cards from a specialised supplier such as ECS.

Appendix A. Troubleshooting

If problems persist, contact your vendor. Check that installation/maintenance operations are performed by a trusted person. Log all maintenance operations, including the name of the operator.

Warning message displayed

In the tampered state, the YOMOVA displays a warning message and it is not possible to use the terminal to make a payment. When a warning message is displayed:

1. take the terminal out of service
2. contact the supplier immediately, who may then report the problem to Worldline
3. keep the terminal available for possible forensic investigation

Display not working

Check all components and connections (mains and adaptor) in the power supply.

Is the USB cable connected to the YOMOVA?

Is the USB cable connected to the ePOS equipment/PC, the USB adaptor or the Merchant Unit?

Unplug the USB cable and re-insert it.

Try another USB socket on the ePOS equipment/PC: the socket the YOMOVA is connected to may not be supplying power.

Try another wall socket: the socket the USB adaptor is connected to may not be supplying power.

YOMOVA display working, but equipment does not respond to key presses

Press the reset button and wait for the equipment to reboot.

Disconnect and reconnect the power supply.

YOMOVA cannot make PSTN connection

Check that the PSTN cable is connected to the PSTN interface.

Check that the PSTN cable is connected to the PSTN outlet.

Check that the correct telephone numbers have been entered.

Check the PSTN line. If it is not working, contact the telecom company to check the status of the line.

Make sure that no other devices attached to the same telecom media are interfering with the communication of the terminal.

Make sure that the system that your terminal is trying to call is operational.

YOMOVA cannot make Ethernet connection

Make sure the Ethernet cable is correctly connected to the terminal and to the Ethernet switch.

Check the LEDs on the Ethernet switch.

If the socket you are using for the YOMOVA is inactive, but other sockets are active:

- try connecting the YOMOVA to another socket on the Ethernet switch
- reboot the YOMOVA
- try another cable

If the socket you are using for the YOMOVA is active, the problem may be:

- with the Ethernet host connection address: check with your terminal vendor
- with the firewall/router settings of your Ethernet infrastructure: check with your IT support

YOMOVA cannot read cards

Make sure you swipe or insert the card correctly.

Check the card for damage, and try another card to determine whether or not the problem is caused by a defective card.

Clean the card readers with a cleaning card.

If your payment application allows it, try to complete the transaction manually using the keypad instead of the card reader. After the manual transaction has been completed, contact your vendor to have your terminal repaired or replaced.

Printer does not work

Open the printer cover and check whether there is enough paper.

Check that the printer cover is properly closed.

Check that the paper is inserted correctly.

Check if there is a paper jam: remove the paper roll, carefully cut the damaged paper from the roll and replace the roll.

Connection with ePOS equipment/PC through USB does not function

Check the cables between the YOMOVA and the ePOS

Check the connection settings on the YOMOVA, as described by your vendor.

Appendix B. Operating your YOMOVA countertop safely

The YOMOVA is a payment terminal and is not to be used for any other purposes. Worldline declines any liability if the instructions and precautions contained in this manual are not observed.

Operating conditions

The YOMOVA can be used at an operating temperature between -10°C and +50°C, and between 20% and 95% RH, non-condensing.

Handle your YOMOVA with care: there is no warranty against breakage. Avoid exposing the YOMOVA to:

- shocks and vibrations
- shocks and vibrations
- excessive heat and dust, including direct sunlight or objects that radiate heat
- explosive, corrosive or otherwise hostile environments
- oil, water, moisture or condensation
- electric motors, high-frequency devices (for example, microwave ovens and induction hobs) and other equipment that can cause excessive voltage fluctuations and/or electromagnetic fields
- Electronic Article Surveillance (EAS) gates

  EAS gates are commonly placed at store exits, to identify potentially stolen items as customers leave the store. Make sure the YOMOVA is at least 20 cm from any high-frequency (8 MHz and above) EAS gates, and at least 80 cm from any low-frequency gates

Do not:

- store your YOMOVA in refrigerators, defrosting systems or microwaves
- treat your YOMOVA with a hairdryer or any high pressure cleaning equipment
- put any heavy equipment on top of your YOMOVA or squeeze it
- store your YOMOVA with food or any consumable goods

Electrical installations

The YOMOVA operates safely when used according to its marked electrical ratings and product usage instructions. To ensure the safe operation of the YOMOVA, use it only in premises that have electrical installations in compliance with local and regional office and residential electrical wiring codes.

Power supply

- only use the power adaptor that is supplied with your YOMOVA to operate the YOMOVA

  Check regularly that there is no overheating of the power adaptor.
- disconnect the power adaptor when you want to clean the terminal housing or the display and when the YOMOVA needs servicing or repair
- never use extension cables for the DC outlet of the power adaptor

Printer and paper

Impact, friction, temperature, humidity, light, and oil affect the colouring and storage characteristic of thermal printer paper. Do not load paper rolls that have folds, wrinkles, tears, or holes. Do not pull paper out of the printer; this could damage the feed mechanism. Only use Worldline-approved paper.

Opening the terminal

- Only open the YOMOVA terminal for adjustments that are described in this manual. Never remove or open any part that is not described in this manual.
- When opening the YOMOVA terminal take the necessary precautions to avoid electrostatic discharge (ESD). An electrostatic charge can build up on the human body and then be discharged when you touch a circuit board. ESD can damage equipment and impair electrical circuitry. To minimize the risk, always follow these guidelines when removing and replacing SAM cards or connecting the YOMOVA to external equipment.:
  - ground (earth) yourself by holding the YOMOVA and touching a metal surface on the ground.

    For example, if your computer has a metal case and is plugged into a standard grounded outlet, then touching the case should discharge the ESD on your body
  - make sure not to wear any clothing that conducts a lot of electrical charge, such as a woollen sweater
  - unless absolutely necessary, avoid working on the YOMOVA during a thunderstorm
  - remove all jewellery

Servicing

All servicing other than the actions described in this manual must by performed by Worldline or an approved service centre.

Appendix C. Approvals and operating conditions

Any changes or modifications not expressly approved by Worldline could make official certification void.

CE certification

Worldline declares that the YOMOVA countertop terminal complies with the R&TTE directive 1999/5/EC. The declaration of conformity (DoC) can be consulted on the website terminals.worldline.com.

R&TTE

The YOMOVA countertop terminal complies with R&TTE Directive 1999/5/EC on radio equipment and telecommunications terminal equipment intended to be connected to public telecommunications networks.

FCC rules – class A

This equipment has been tested and found to comply with the limits for Class A and Class B digital devices, pursuant to Part 15 of the FCC Rules. For more information on these rules, see the FCC web site.

Operating conditions

The YOMOVA countertop terminal can be used at an operating temperature between -10°C and +50°C, and between 20% and 95% RH, non-condensing.

Avoid exposing the YOMOVA countertop terminal to:

- shocks and vibrations
- excessive heat and dust, including direct sunlight or objects that radiate heat
- explosive environments
- oil, water, moisture or condensation
- electric motors, high-frequency devices (for example, microwave ovens) and other equipment that can cause excessive voltage fluctuations and/or electromagnetic fields
- Electronic Article Surveillance (EAS) gates

  EAS gates are commonly placed at store exits, to identify potentially stolen items as customers leave the store. Make sure the YOMOVA terminal is at least 20 cm from any high-frequency (8 MHz and above) EAS gates, and at least 80 cm from any low-frequency gates

Appendix D. Decommissioning a YOMOVA

When a YOMOVA or any of its accessories is at the end of its life, it must not be simply thrown away, given away or sold it. Remember that:

- security awareness requires erasing cryptographic components securely and completely
- sustainability requires recycling as many components as possible
- environmental awareness requires disposing of hazardous materials professionally

Return the YOMOVA to your vendor for decommissioning.

Step by step

1. Inspect the terminal for completeness, signs of intrusion and tampering, as explained under Security recommendations, on page 17.

   If you find any evidence of tampering, report the problem to Worldline and keep the terminal available for possible forensic investigation.

2. If you do not find any evidence of tampering, dispose of the terminal following local rules and regulations for disposal of electronic equipment, such as WEEE. Make sure that the person or organisation responsible effectively destroys the terminal and its components.

3. Log the physical disposal of the terminal in the assets register.